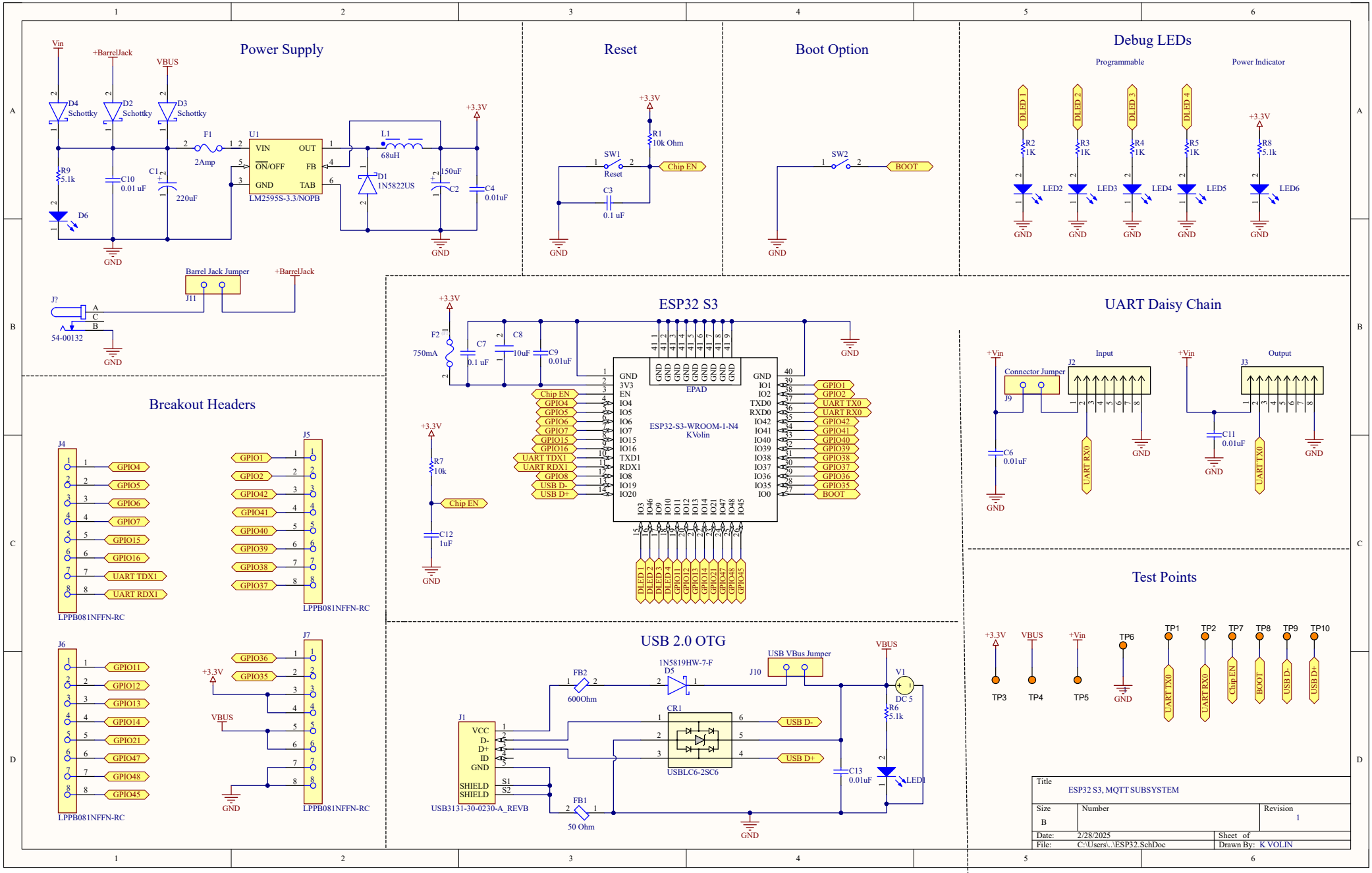
Power Supply
Vin
+BarrelJack
VBUS
D4 Schottky
D2 Schottky
D3 Schottky
F1
2Amp
U1
VIN
OUT
ON/OFF
FB
GND
TAB
LM2595S-3.3/NOPB
L1
68uH
D1
1N5822US
150uF
C2
C4
0.01uF
+3.3V
R9
5.1k
C10
0.01 uF
C1
220uF
D6
GND
Barrel Jack Jumper
J11
J?
54-00132
Reset
SW1
R1
10k Ohm
Chip EN
C3
0.1 uF
Boot Option
SW2
BOOT
Debug LEDs
Programmable
Power Indicator
DLED 1
DLED 2
DLED 3
DLED 4
R2 1K
R3 1K
R4 1K
R5 1K
R8 5.1k
LED2
LED3
LED4
LED5
LED6
ESP32 S3
F2
750mA
C7
0.1 uF
C8
10uF
C9
0.01uF
EPAD
ESP32-S3-WROOM-1-N4
KVolin
GND
3V3
EN
IO4
IO5
IO6
IO7
IO15
IO16
TXD1
RDX1
IO8
IO19
IO20
IO1
IO2
TXD0
RXD0
IO42
IO41
IO40
IO39
IO38
IO37
IO36
IO35
IO0
Chip EN
GPIO4
GPIO5
GPIO6
GPIO7
GPIO15
GPIO16
UART TDX1
UART RDX1
GPIO8
USB D-
USB D+
GPIO1
GPIO2
UART TX0
UART RX0
GPIO42
GPIO41
GPIO40
GPIO39
GPIO38
GPIO37
GPIO36
GPIO35
BOOT
R7
10k
C12
1uF
UART Daisy Chain
Connector Jumper
J9
C6
0.01uF
J2
Input
J3
Output
C11
0.01uF
Breakout Headers
J4
J5
J6
J7
LPPB081NFFN-RC
GPIO11
GPIO12
GPIO13
GPIO14
GPIO21
GPIO47
GPIO48
GPIO45
GPIO36
GPIO35
VBUS
USB 2.0 OTG
FB2
600Ohm
1N5819HW-7-F
D5
USB VBus Jumper
J10
V1
DC 5
R6
5.1k
CR1
USBLC6-2SC6
J1
VCC
D-
D+
ID
GND
SHIELD
SHIELD
USB3131-30-0230-A_REVB
FB1
50 Ohm
C13
0.01uF
LED1
Test Points
+3.3V
VBUS
+Vin
TP6
TP1
TP2
TP7
TP8
TP9
TP10
TP3
TP4
TP5
UART TX0
UART RX0
Chip EN
BOOT
USB D-
USB D+
Title
ESP32 S3, MQTT SUBSYSTEM
Size
B
Number
Revision
1
Date: 2/28/2025
Sheet of
File: C:\Users\..\ESP32.SchDoc
Drawn By: K VOLIN