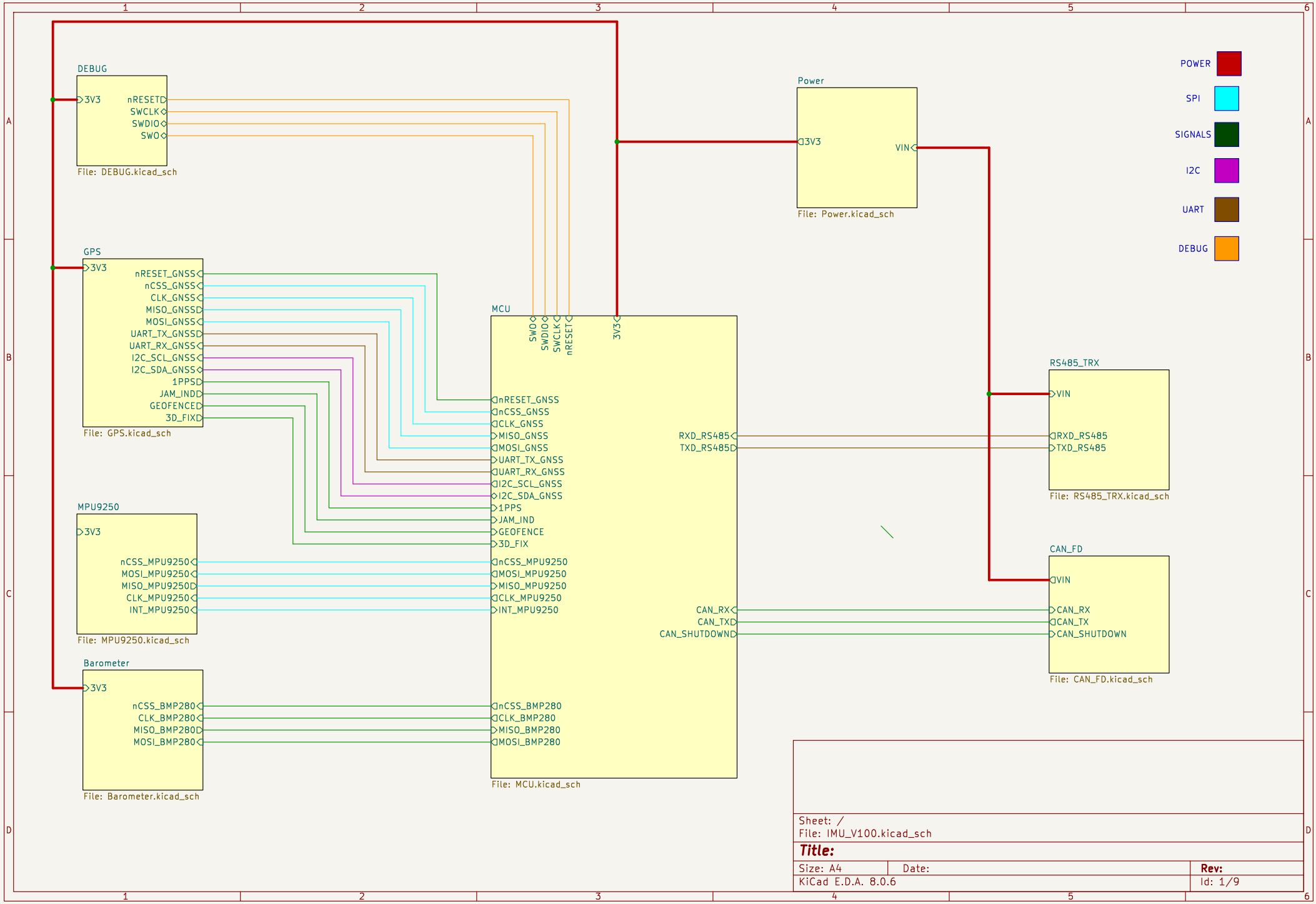
DEBUG
3V3
nRESET
SWCLK
SWDIO
SWO
File: DEBUG.kicad_sch
Power
3V3
VIN
File: Power.kicad_sch
POWER
SPI
SIGNALS
I2C
UART
DEBUG
GPS
3V3
nRESET_GNSS
nCSS_GNSS
CLK_GNSS
MISO_GNSS
MOSI_GNSS
UART_TX_GNSS
UART_RX_GNSS
I2C_SCL_GNSS
I2C_SDA_GNSS
1PPS
JAM_IND
GEOFENCE
3D_FIX
File: GPS.kicad_sch
MCU
SWO
SWDIO
SWCLK
nRESET
3V3
nRESET_GNSS
nCSS_GNSS
CLK_GNSS
MISO_GNSS
MOSI_GNSS
UART_TX_GNSS
UART_RX_GNSS
I2C_SCL_GNSS
I2C_SDA_GNSS
1PPS
JAM_IND
GEOFENCE
3D_FIX
RXD_RS485
TXD_RS485
nCSS_MPU9250
MOSI_MPU9250
MISO_MPU9250
CLK_MPU9250
INT_MPU9250
CAN_RX
CAN_TX
CAN_SHUTDOWN
nCSS_BMP280
CLK_BMP280
MISO_BMP280
MOSI_BMP280
File: MCU.kicad_sch
RS485_TRX
VIN
RXD_RS485
TXD_RS485
File: RS485_TRX.kicad_sch
MPU9250
3V3
nCSS_MPU9250
MOSI_MPU9250
MISO_MPU9250
CLK_MPU9250
INT_MPU9250
File: MPU9250.kicad_sch
CAN_FD
VIN
CAN_RX
CAN_TX
CAN_SHUTDOWN
File: CAN_FD.kicad_sch
Barometer
3V3
nCSS_BMP280
CLK_BMP280
MISO_BMP280
MOSI_BMP280
File: Barometer.kicad_sch
Sheet: /
File: IMU_V100.kicad_sch
Title:
Size: A4
Date:
Rev:
KiCad E.D.A. 8.0.6
Id: 1/9

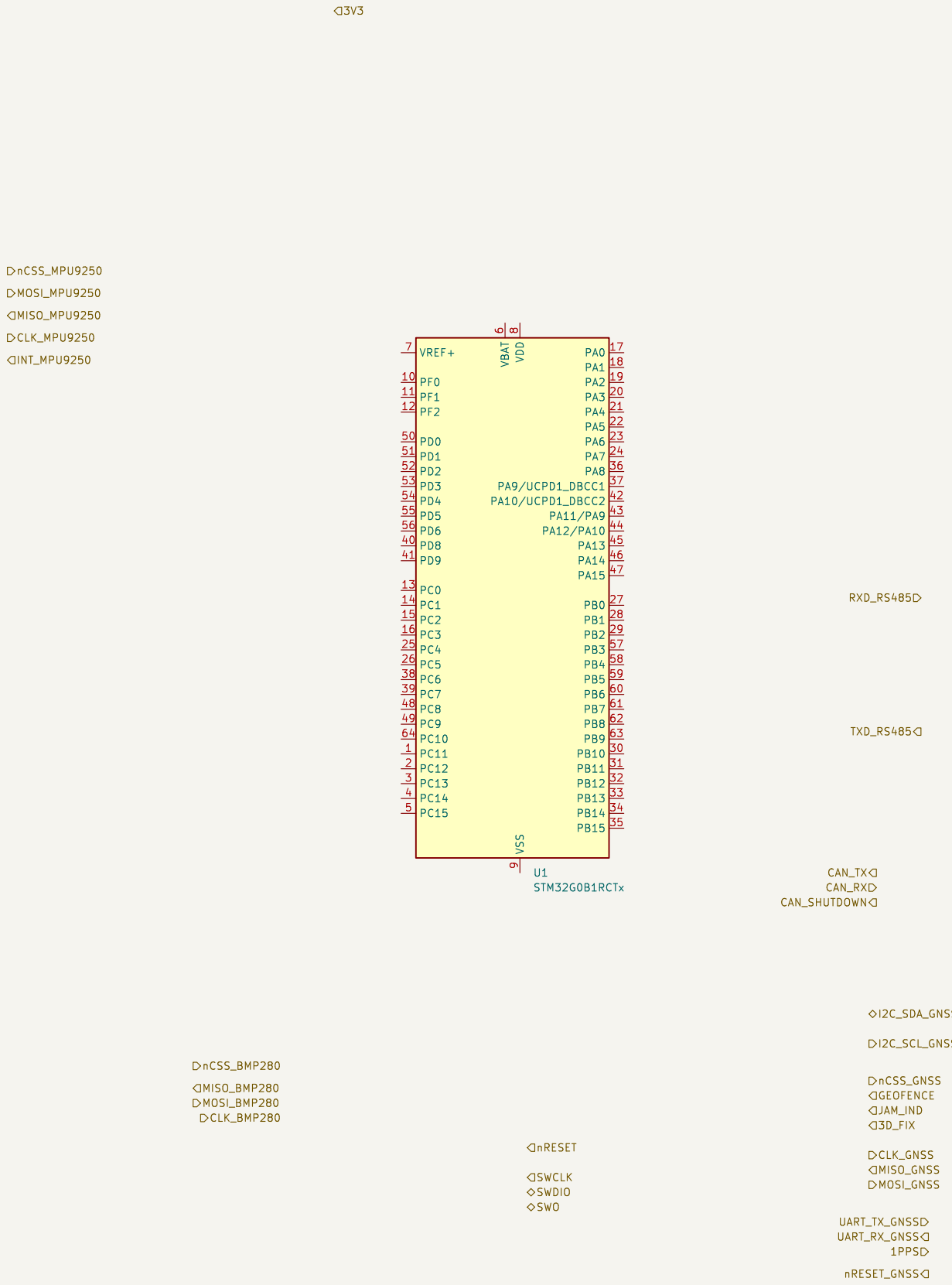

Sheet: /MCU/
File: MCU.kicad_sch

Title:

Size: A4	Date:	**Rev:**
KiCad E.D.A. 8.0.6		Id: 2/9

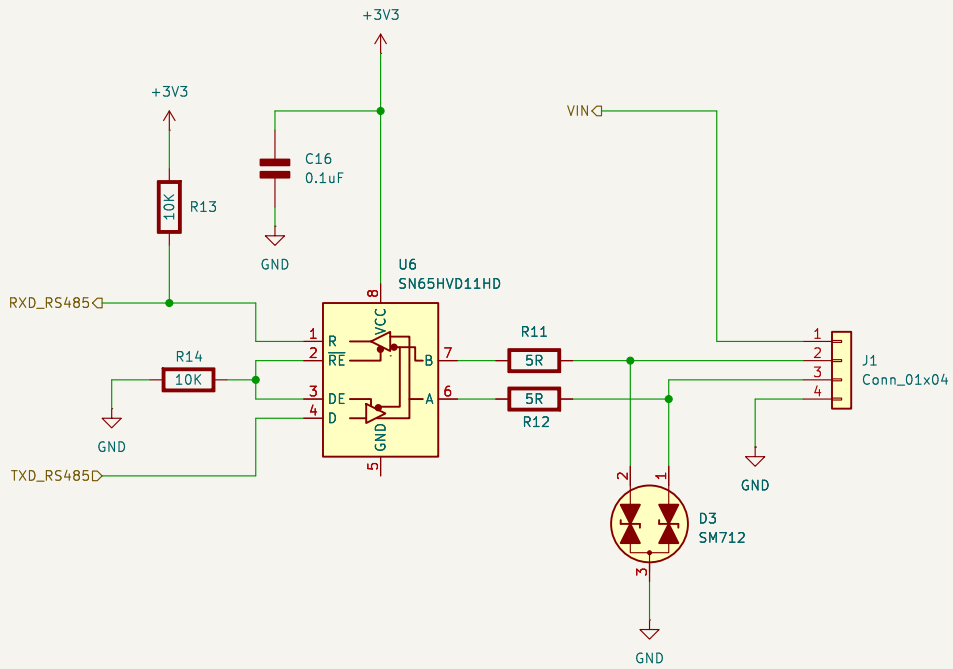

Sheet: /RS485_TRX/
File: RS485_TRX.kicad_sch

Title:

Size: A4	Date:	Rev:
KiCad E.D.A. 8.0.6		Id: 3/9

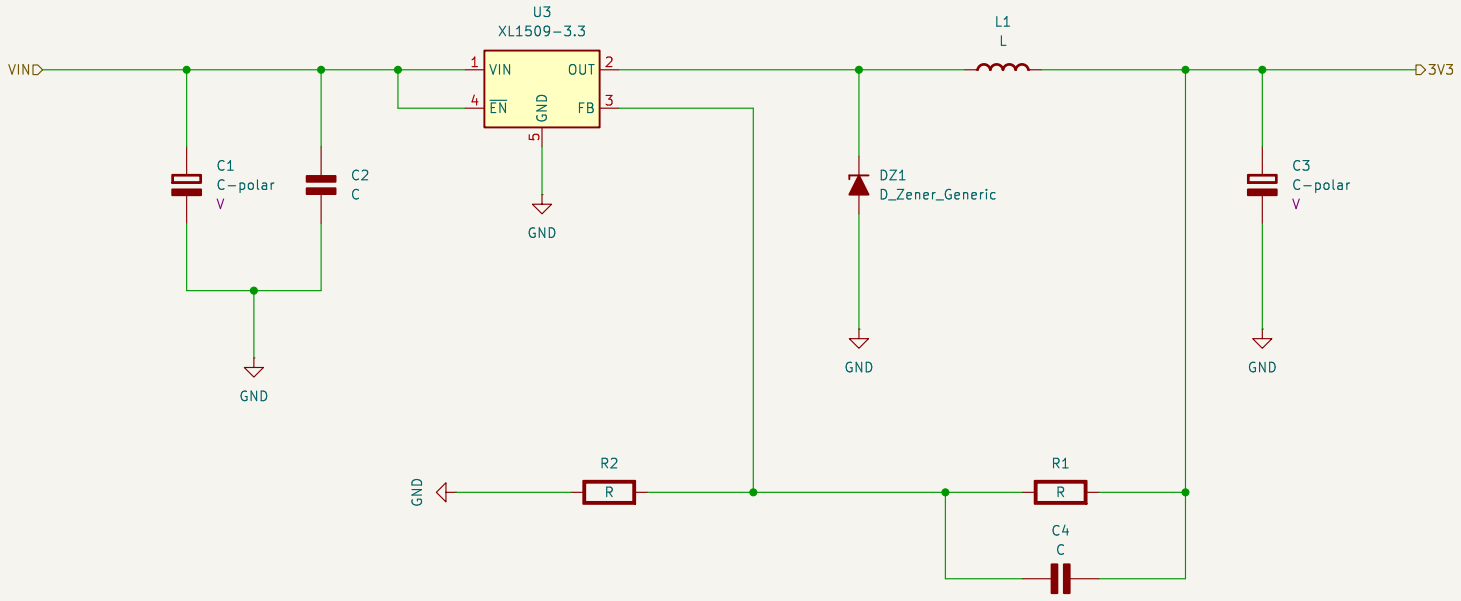

Sheet: /Power/
File: Power.kicad_sch

Title:

Size: A4	Date:	Rev:
KiCad E.D.A. 8.0.6		Id: 4/9

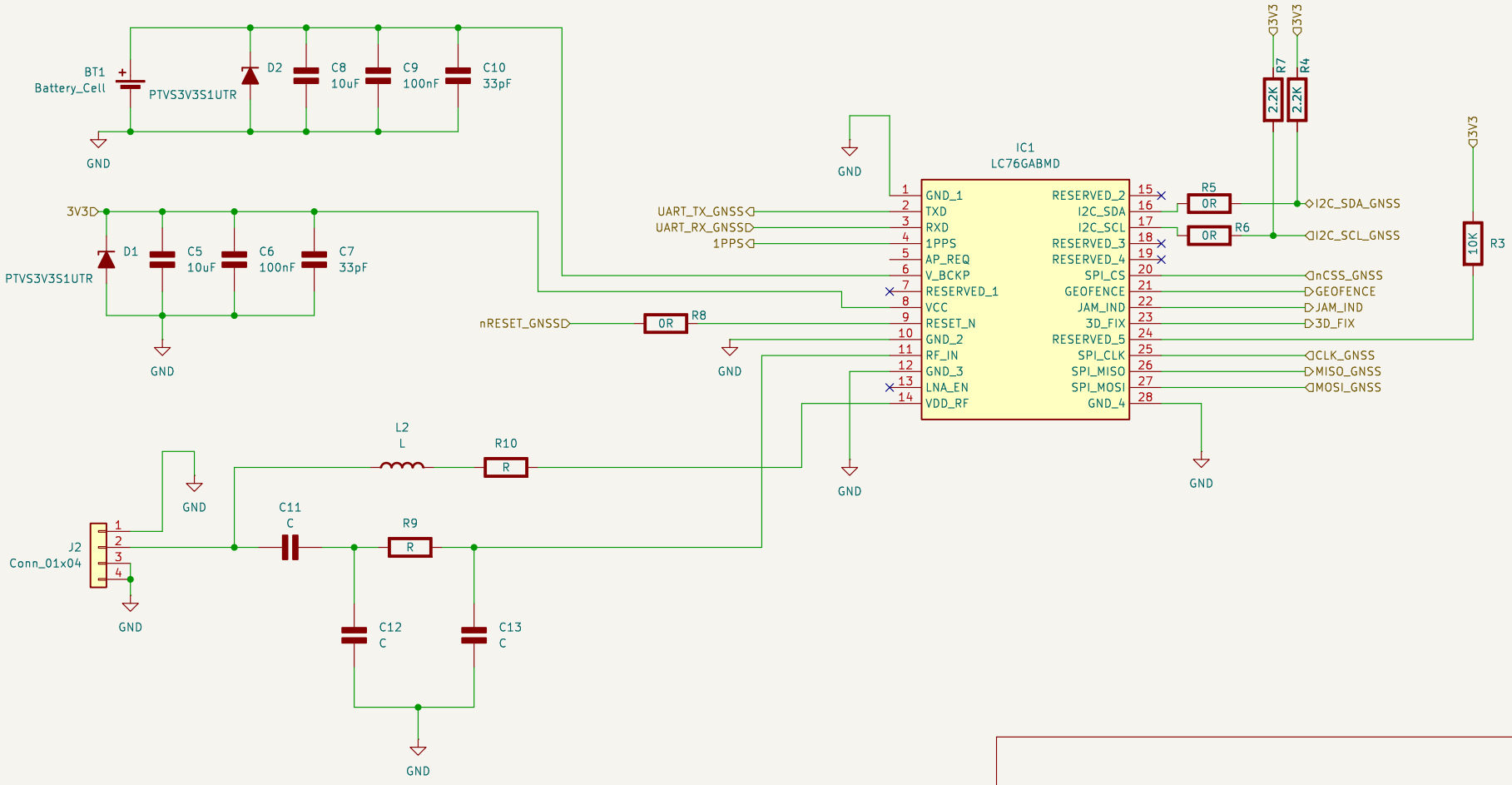

Sheet: /GPS/
File: GPS.kicad_sch

Title:

Size: A4	Date:	**Rev:**
KiCad E.D.A. 8.0.6		Id: 5/9

3V3

nCSS_MPU9250

MOSI_MPU9250

MISO_MPU9250

CLK_MPU9250

INT_MPU9250

Sheet: /MPU9250/
File: MPU9250.kicad_sch

Title:

Size: A4	Date:	**Rev:**
KiCad E.D.A. 8.0.6		Id: 6/9

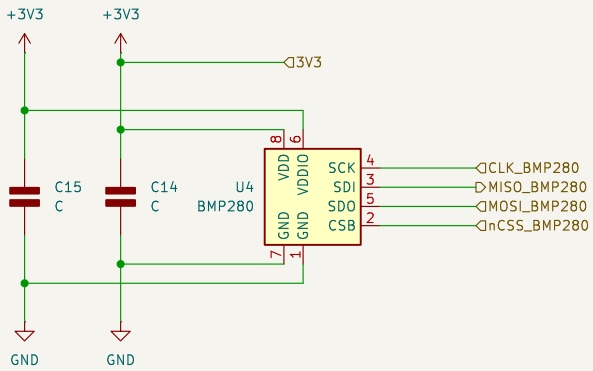

Sheet: /Barometer/
File: Barometer.kicad_sch

Title:

Size: A4	Date:	**Rev:**
KiCad E.D.A. 8.0.6		Id: 7/9

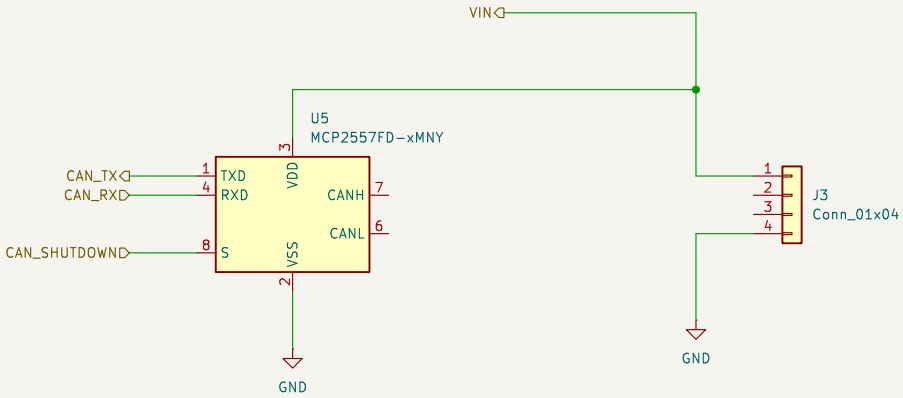

Sheet: /CAN_FD/
File: CAN_FD.kicad_sch

Title:

Size: A4	Date:	**Rev:**
KiCad E.D.A. 8.0.6		Id: 8/9

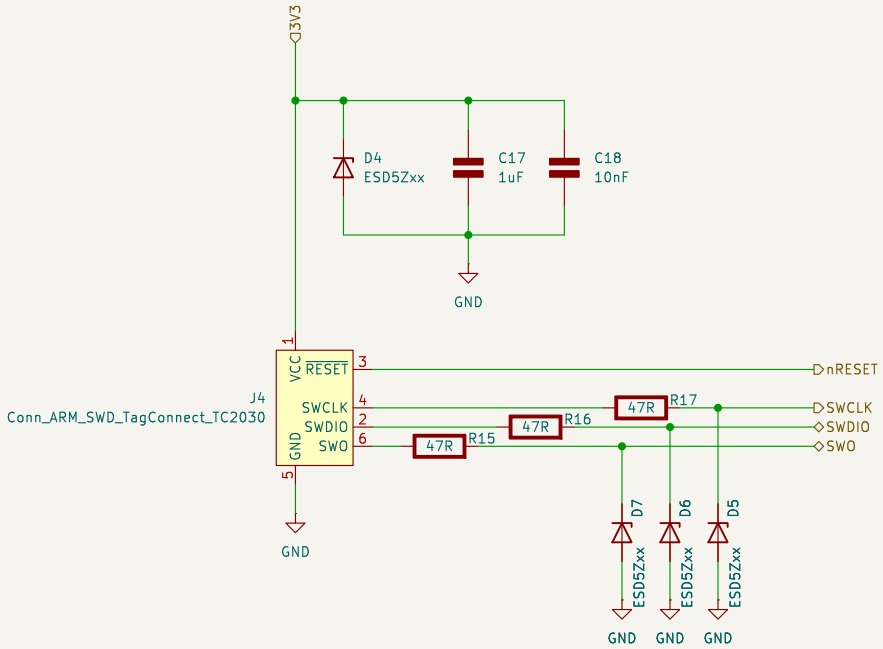

Sheet: /DEBUG/
File: DEBUG.kicad_sch

Title:

Size: A4	Date:	**Rev:**
KiCad E.D.A. 8.0.6		Id: 9/9