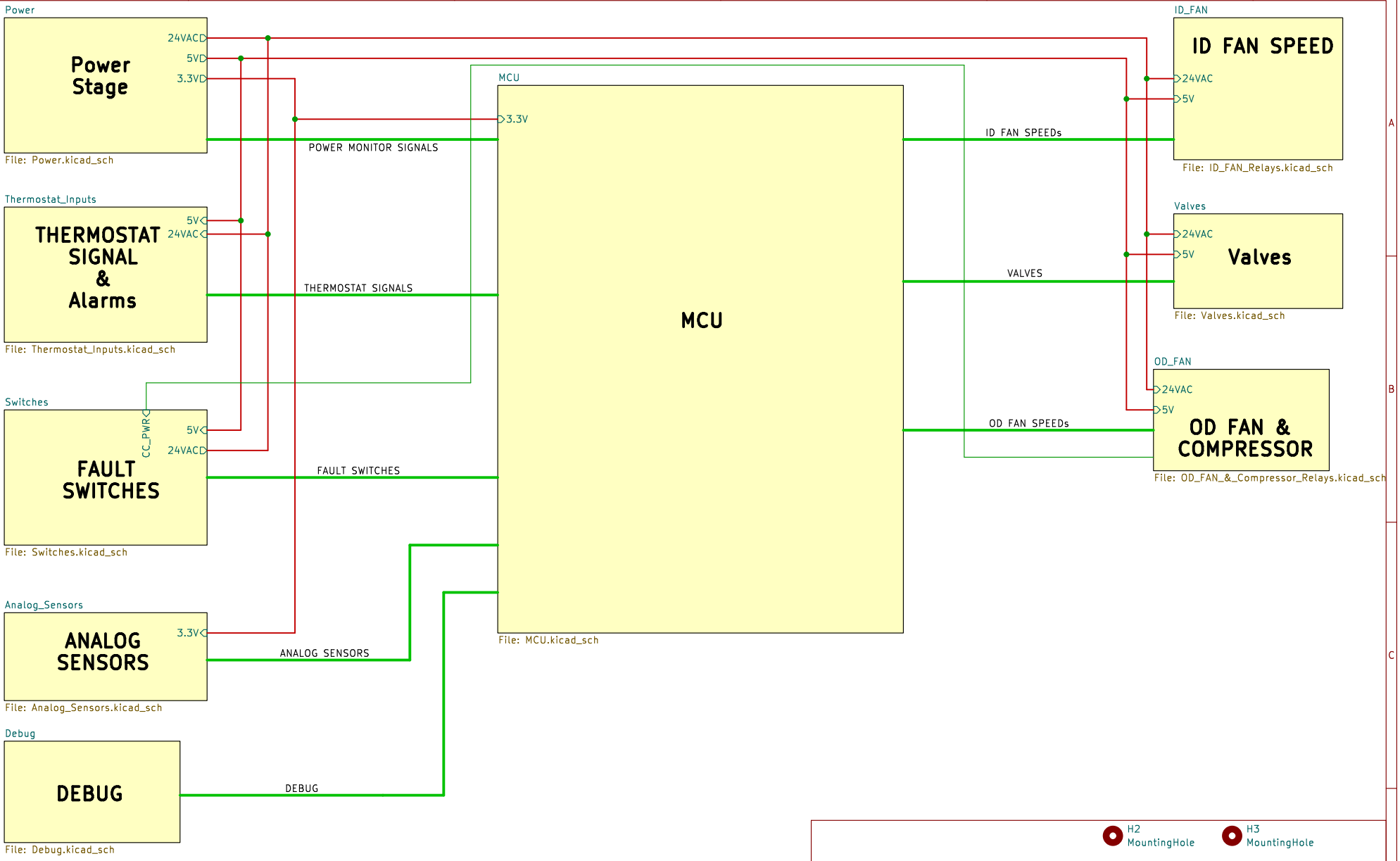

H2 MountingHole
H3 MountingHole
H1 MountingHole
H4 MountingHole

Sheet: /
File: WSHP_V100.kicad_sch

Title:

Size: A4	Date:	Rev:
KiCad E.D.A. 8.0.6		Id: 1/10

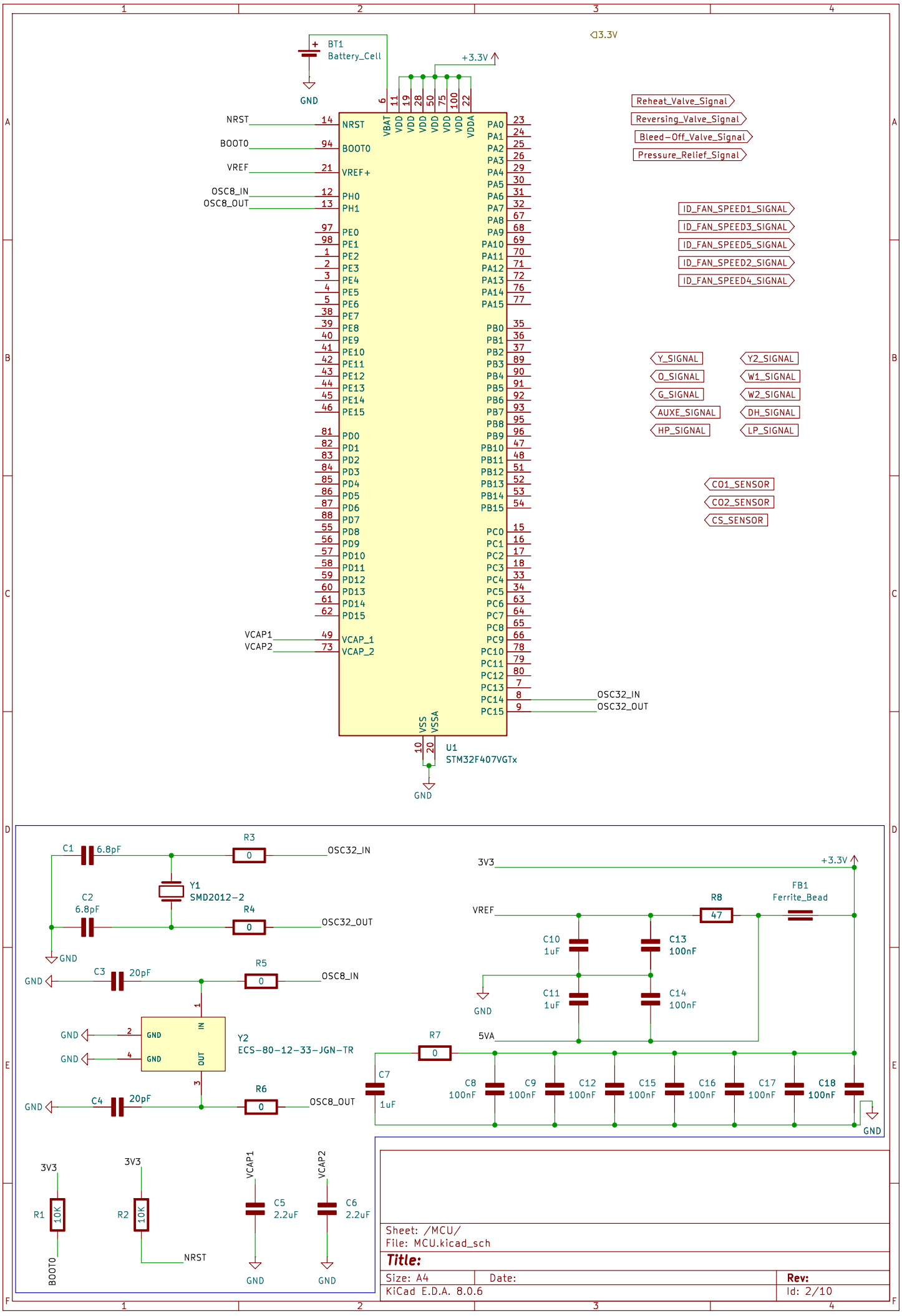
BT1
Battery_Cell
GND
+3.3V
3.3V
NRST
BOOT0
VREF
OSC8_IN
OSC8_OUT
VCAP1
VCAP2
OSC32_IN
OSC32_OUT
U1
STM32F407VGTx
Reheat_Valve_Signal
Reversing_Valve_Signal
Bleed-Off_Valve_Signal
Pressure_Relief_Signal
ID_FAN_SPEED1_SIGNAL
ID_FAN_SPEED3_SIGNAL
ID_FAN_SPEED5_SIGNAL
ID_FAN_SPEED2_SIGNAL
ID_FAN_SPEED4_SIGNAL
Y_SIGNAL
O_SIGNAL
G_SIGNAL
AUXE_SIGNAL
HP_SIGNAL
Y2_SIGNAL
W1_SIGNAL
W2_SIGNAL
DH_SIGNAL
LP_SIGNAL
CO1_SENSOR
CO2_SENSOR
CS_SENSOR
C1 6.8pF
C2 6.8pF
Y1 SMD2012-2
R3 0
R4 0
C3 20pF
C4 20pF
R5 0
R6 0
Y2 ECS-80-12-33-JGN-TR
3V3
VREF
R8 47
FB1 Ferrite_Bead
C10 1uF
C11 1uF
C13 100nF
C14 100nF
5VA
R7 0
C7 1uF
C8 100nF
C9 100nF
C12 100nF
C15 100nF
C16 100nF
C17 100nF
C18 100nF
R1 10K
R2 10K
C5 2.2uF
C6 2.2uF
Sheet: /MCU/
File: MCU.kicad_sch
Title:
Size: A4
Date:
Rev:
KiCad E.D.A. 8.0.6
Id: 2/10

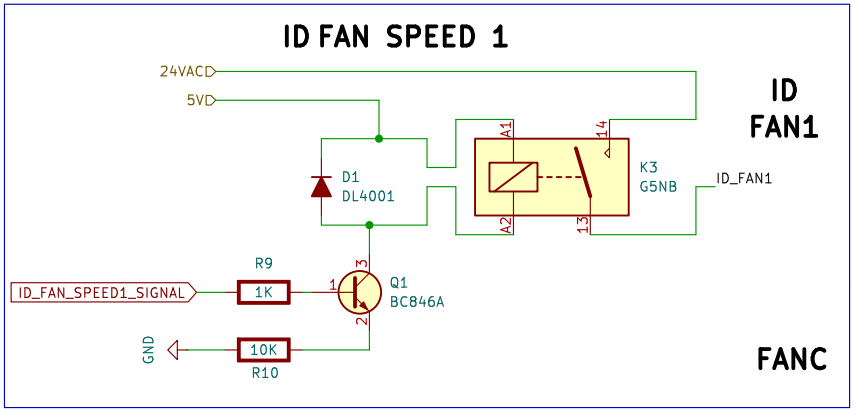

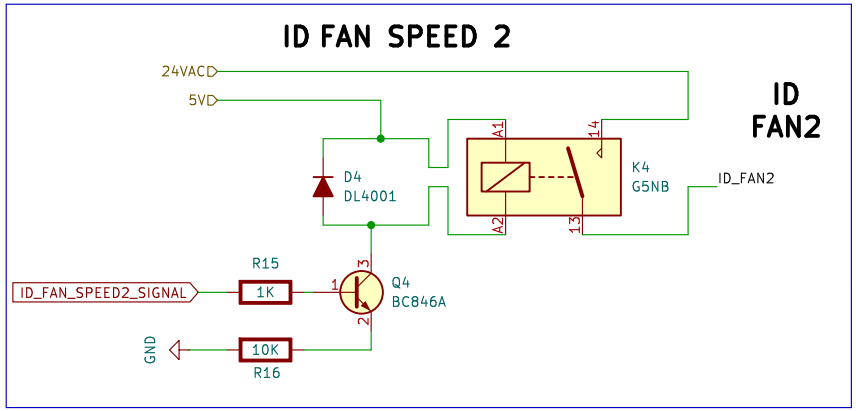

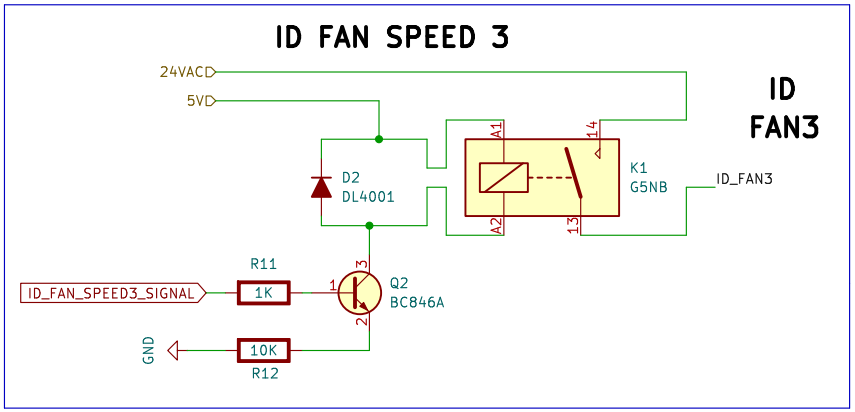

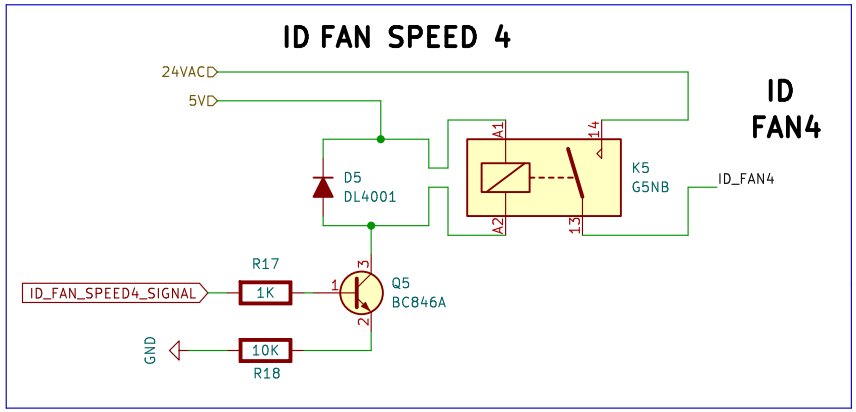

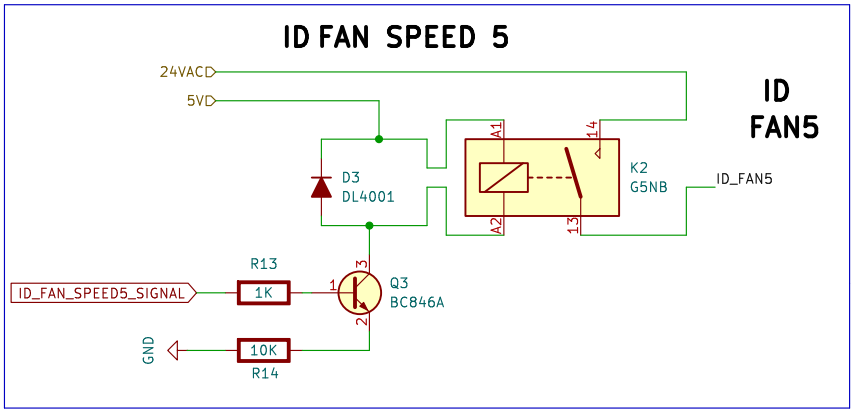

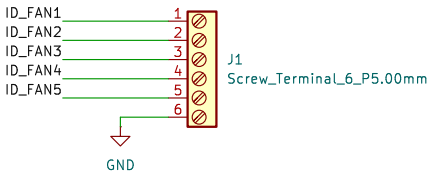

Sheet: /ID_FAN/
File: ID_FAN_Relays.kicad_sch

Title:

Size: A4	Date:	Rev:
KiCad E.D.A. 8.0.6		Id: 3/10

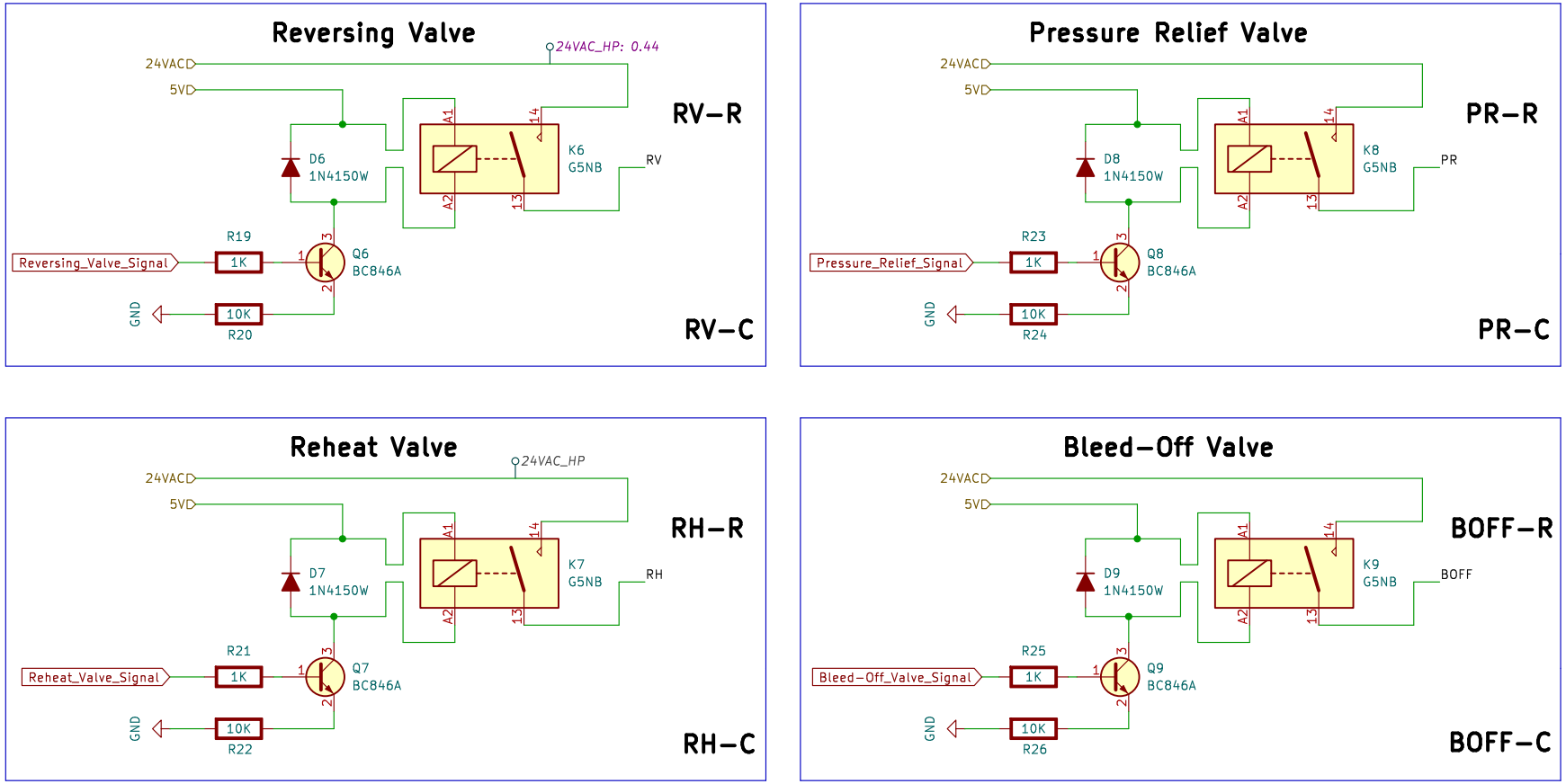

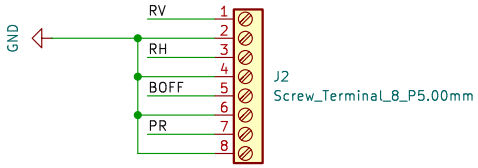

Sheet: /Valves/
File: Valves.kicad_sch

Title:

Size: A4	Date:	Rev:
KiCad E.D.A. 8.0.6		Id: 4/10

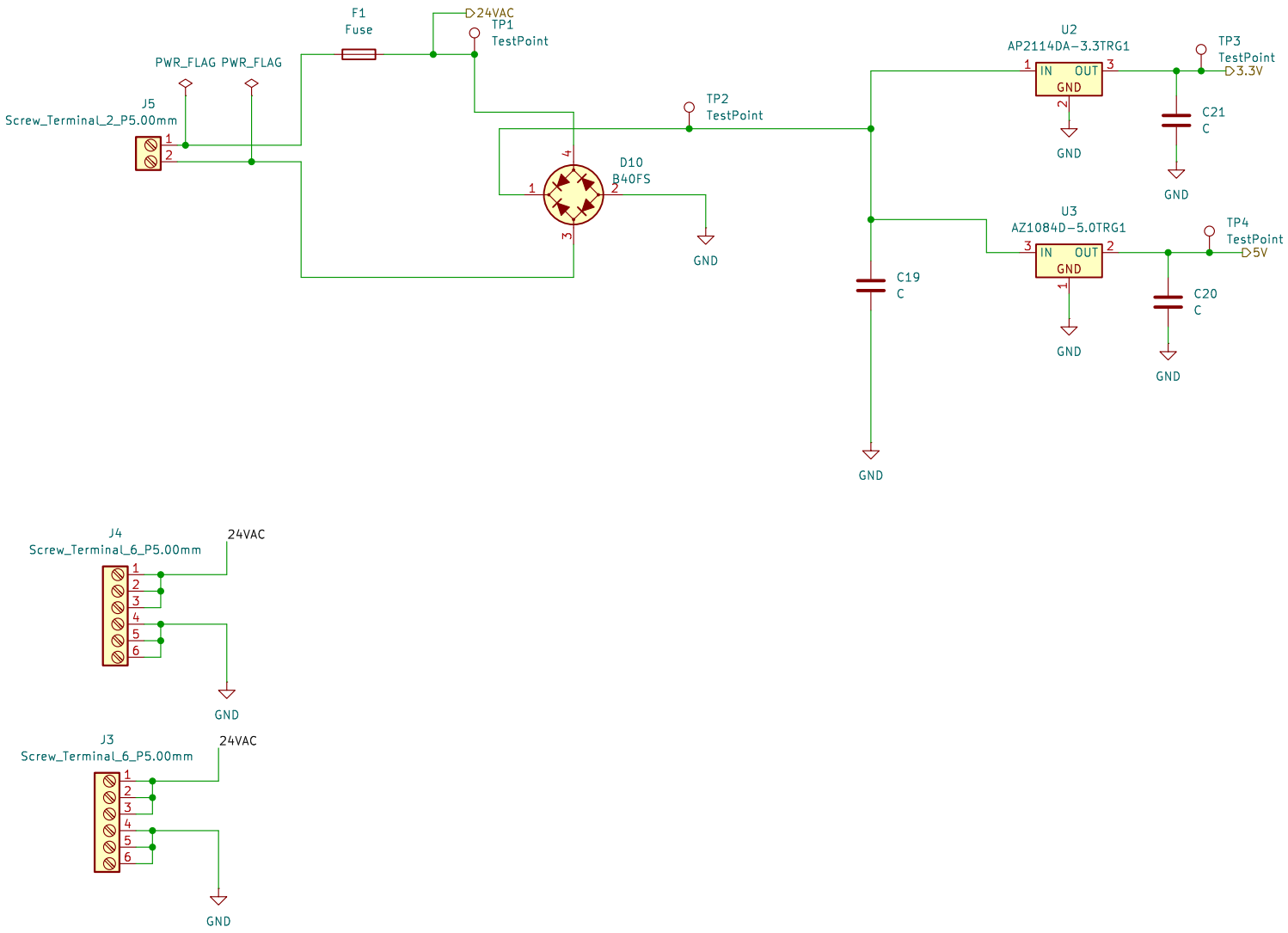

Sheet: /Power/
File: Power.kicad_sch

Title:

Size: A4	Date:	**Rev:**
KiCad E.D.A. 8.0.6		Id: 5/10

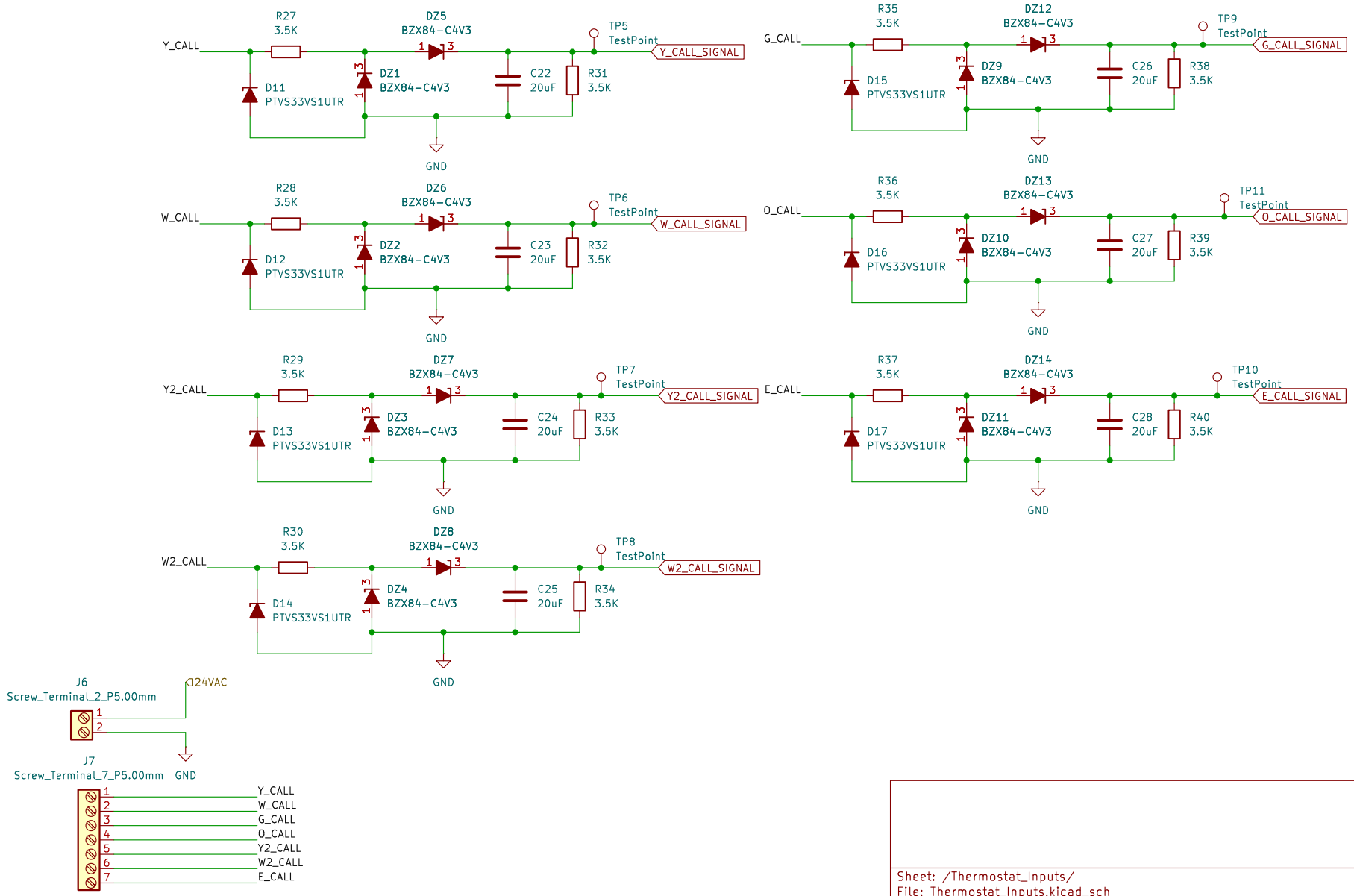

Sheet: /Thermostat_Inputs/
File: Thermostat_Inputs.kicad_sch

Title:

Size: A4	Date:	Rev:
KiCad E.D.A. 8.0.6		Id: 6/10

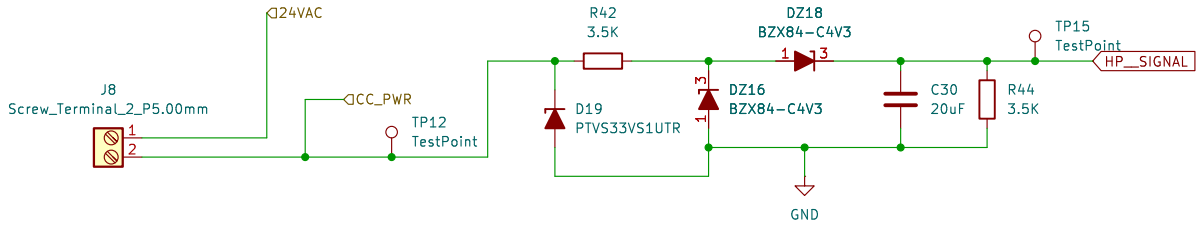

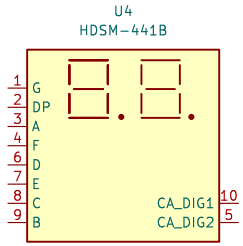

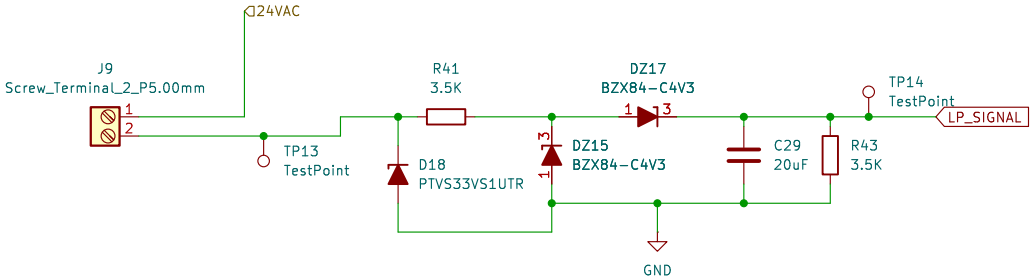

Sheet: /Switches/
File: Switches.kicad_sch

Title:

Size: A4	Date:	**Rev:**
KiCad E.D.A. 8.0.6		Id: 7/10

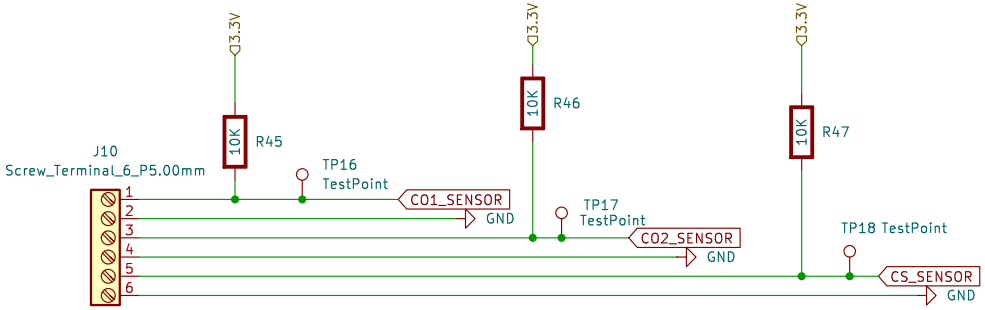

Sheet: /Analog_Sensors/
File: Analog_Sensors.kicad_sch

Title:

Size: A4	Date:	Rev:
KiCad E.D.A. 8.0.6		Id: 8/10

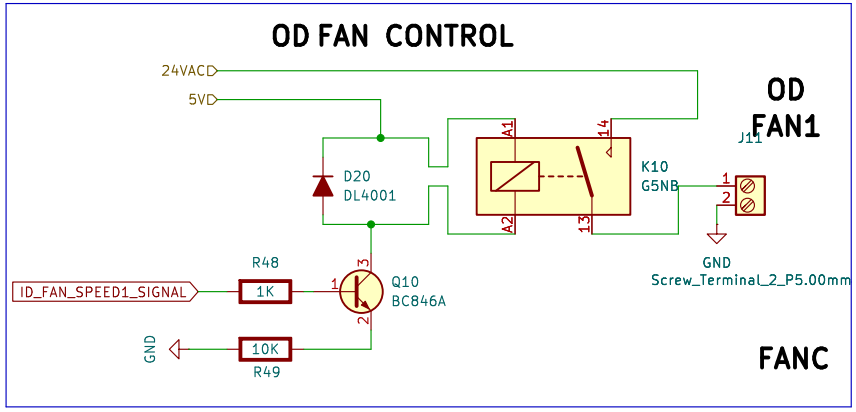

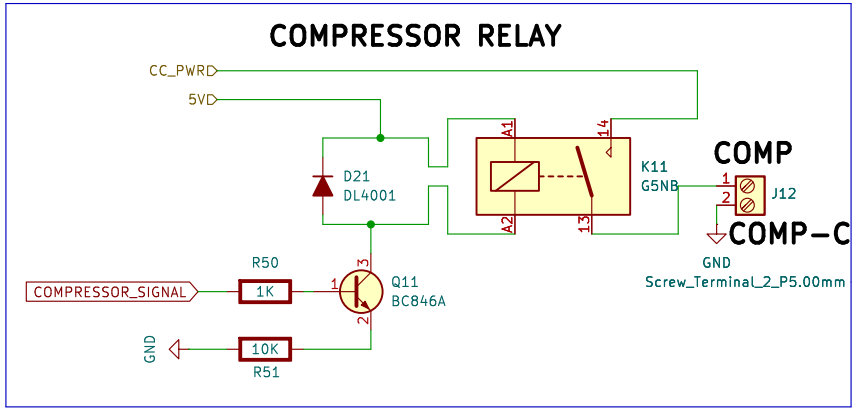

Sheet: /OD_FAN/
File: OD_FAN_&_Compressor_Relays.kicad_sch

Title:

Size: A4	Date:	Rev:
KiCad E.D.A. 8.0.6		Id: 9/10

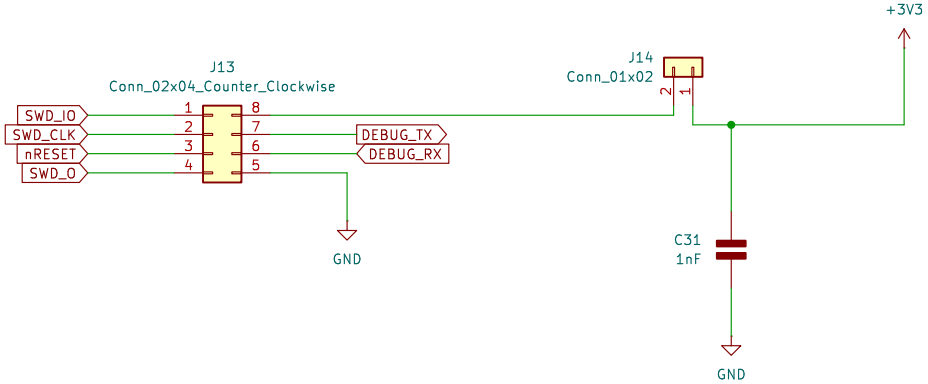

Sheet: /Debug/
File: Debug.kicad_sch

Title:

Size: A4	Date:	**Rev:**
KiCad E.D.A. 8.0.6		Id: 10/10