Revision History

1v0 Initial release.
1v1 Finalised USB circuit.

Notes

See part description for case size.
All resistors are 1%.
All ceramic capactitors (non-polarized) are 50V (if possible) unless otherwise indicated.
Net names are global.

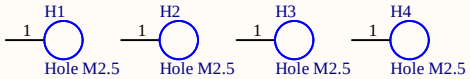


| | |
|---|---|
| Company: Sundance / Opteran | Project: ODK v1 |
| Title: Cover Sheet | Revision: 1v1 |
| Date: 5/4/22 | Sheet: 1 of 15 |
| Filename: Cover Sheet.SchDoc | Drawn: GKP |

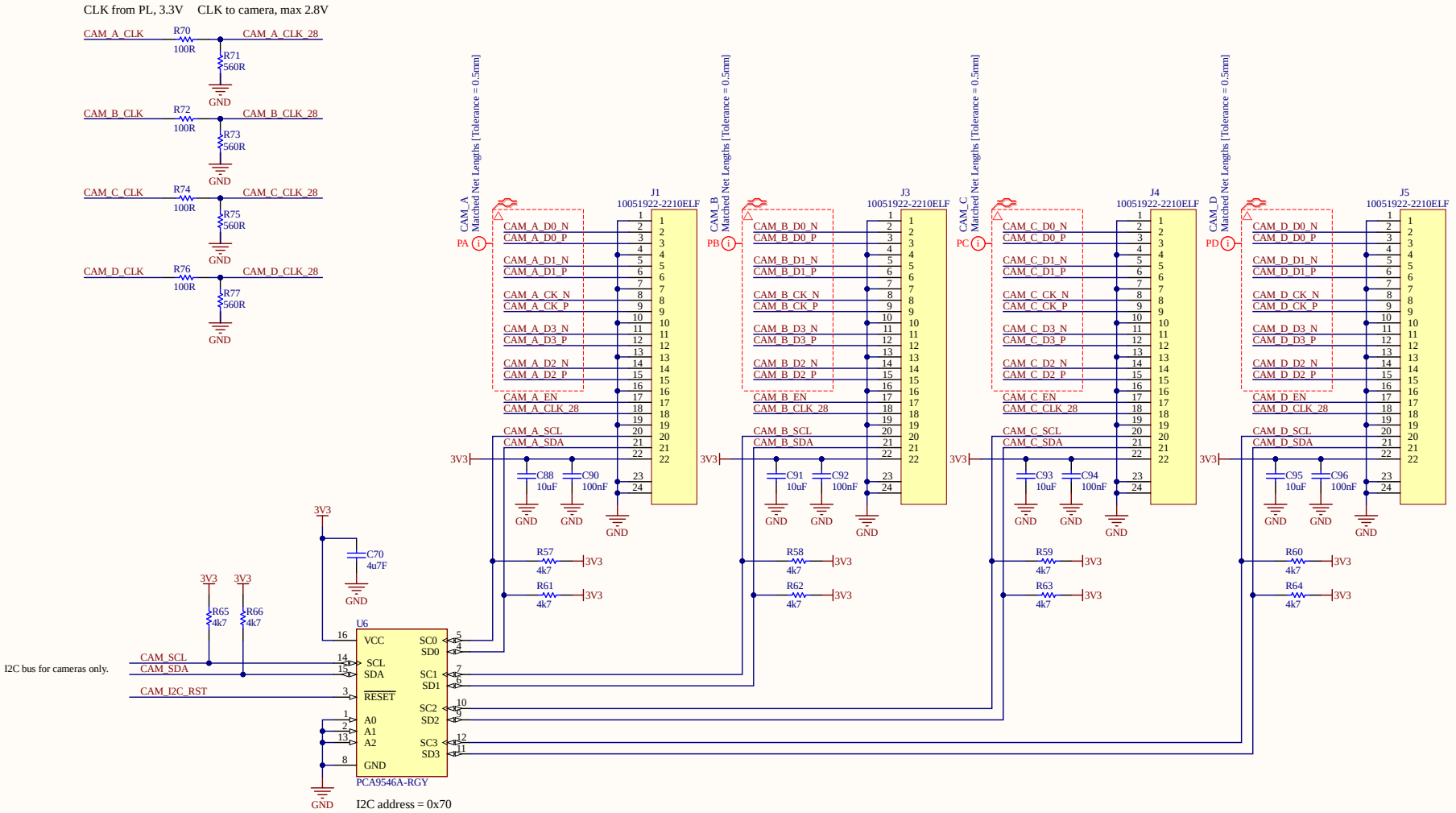


| | |
|---|---|
| Company: Sundance / Opteran | Project: ODK v1 |
| Title: Camera | Revision: 1v1 |
| Date: 5/4/22 | Sheet: 2 of 15 |
| Filename: Camera.SchDoc | Drawn: GKP |

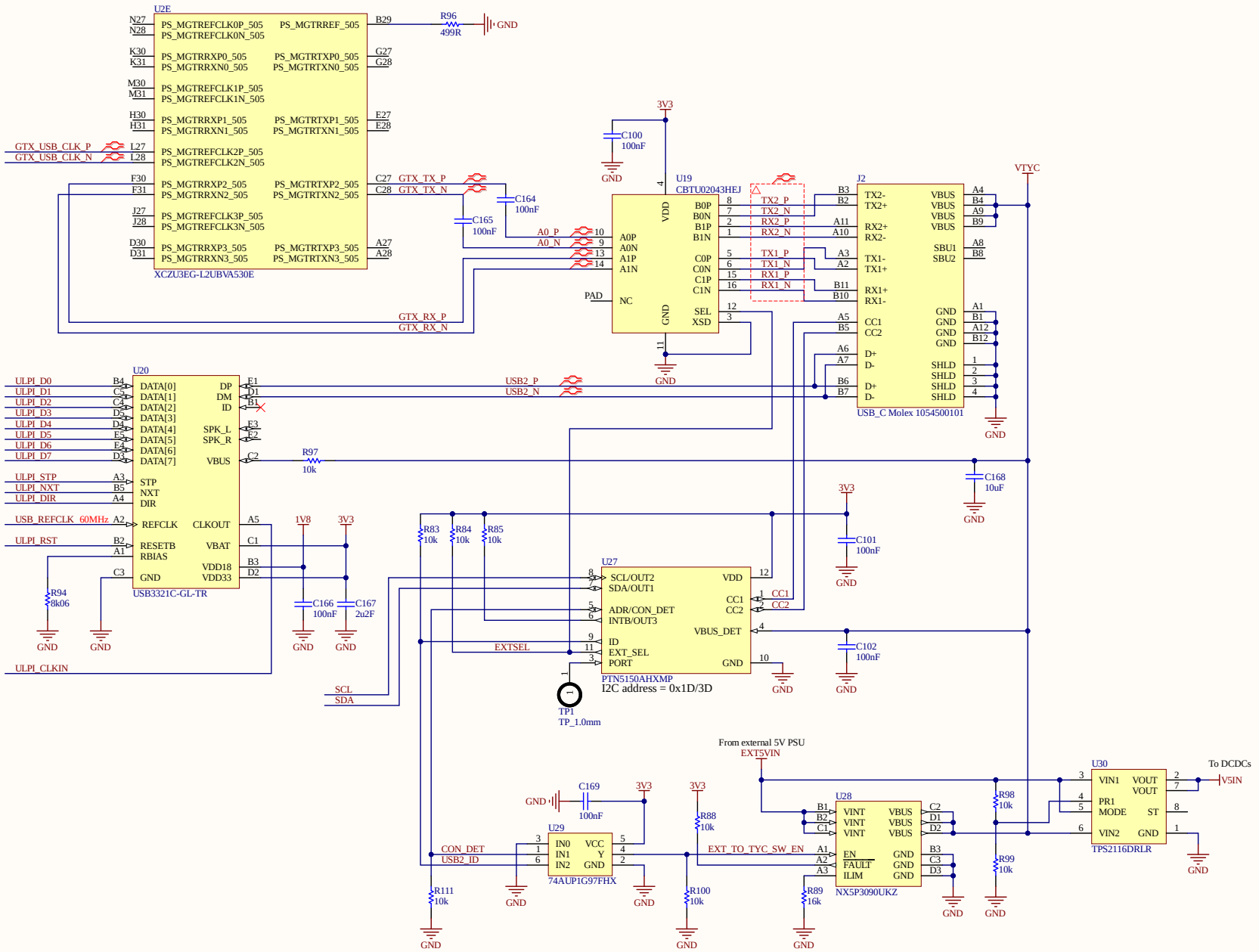


| | |
|---|---|
| Company: Sundance / Opteran | Project: ODK v1 |
| Title: USB | Revision: 1v1 |
| Date: 5/4/22 | Sheet: 3 of 15 |
| Filename: USB.SchDoc | Drawn: GKP |

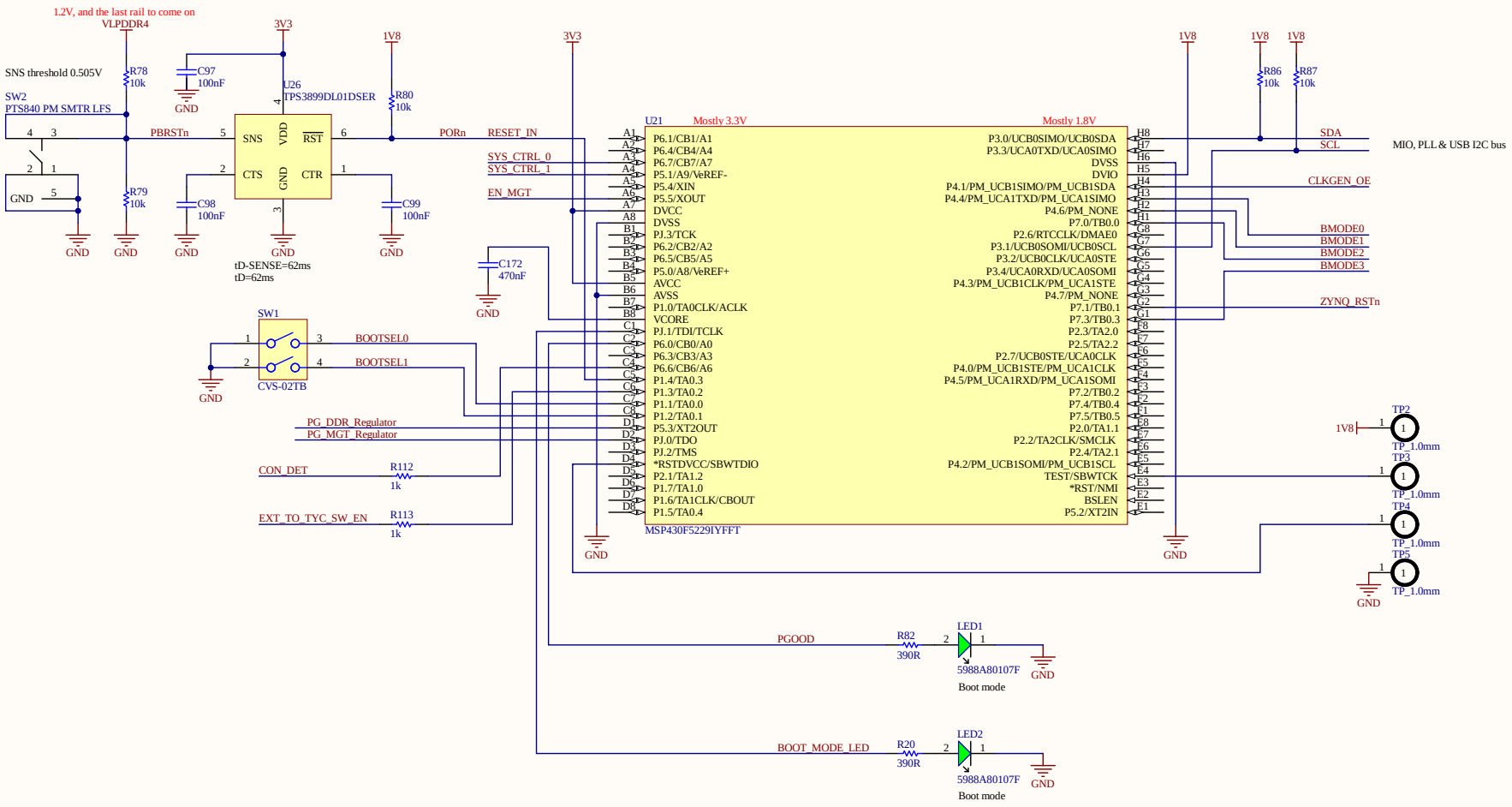


| | |
|---|---|
| Company: Sundance / Opteran | Project: ODK v1 |
| Title: MCU | Revision: 1v1 |
| Date: 5/4/22 | Sheet: 4 of 15 |
| Filename: MCU.SchDoc | Drawn: GKP |

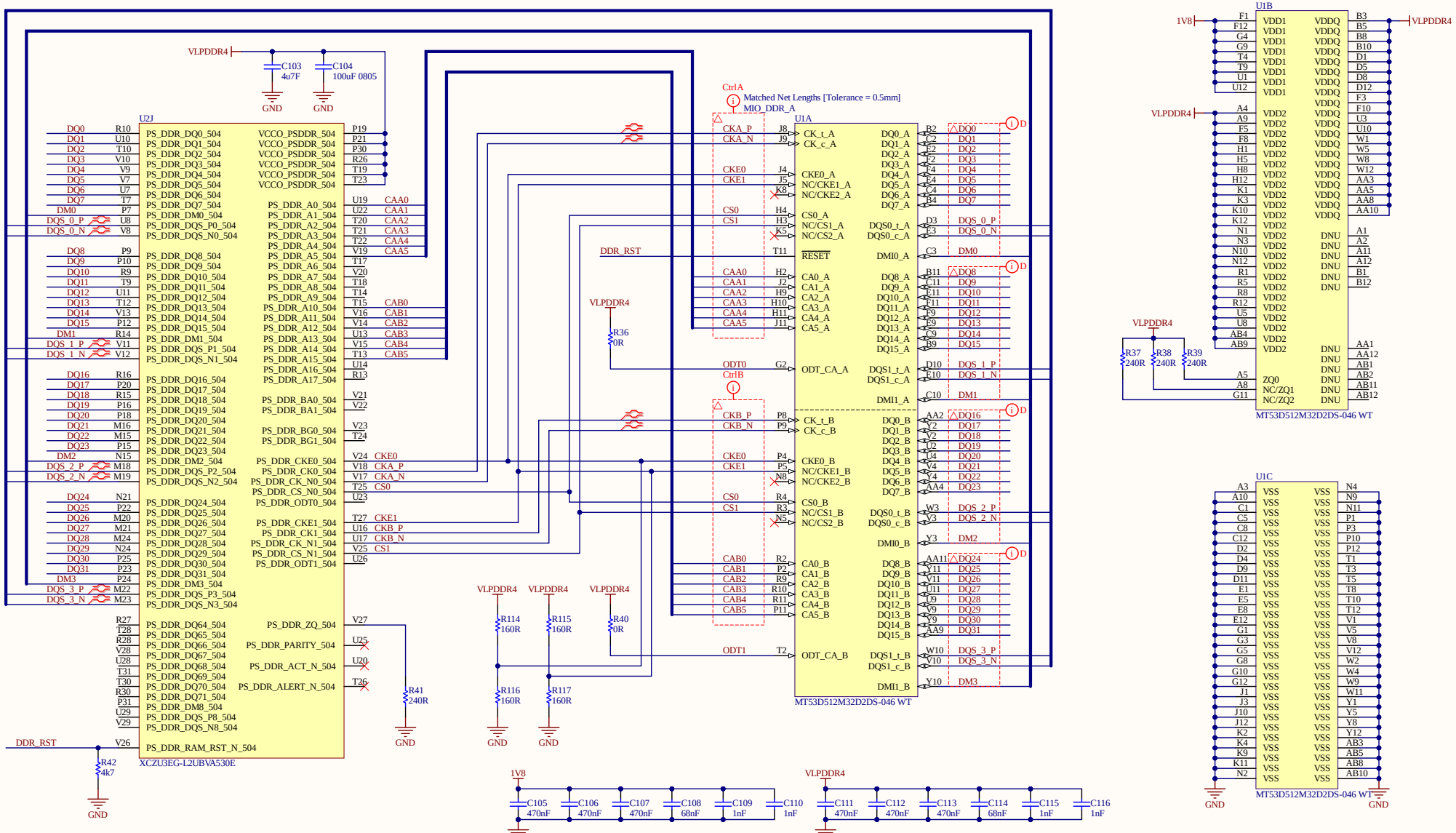


| | |
|---|---|
| Company: Sundance / Opteran | Project: ODK v1 |
| Title: LPDDR4 | Revision: 1v1 |
| Date: 5/4/22 | Sheet: 5 of 15 |
| Filename: DDR.SchDoc | Drawn: GKP |

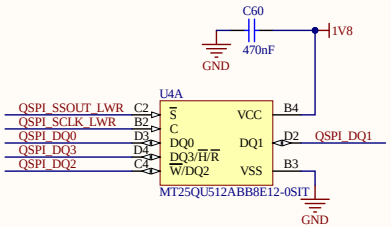


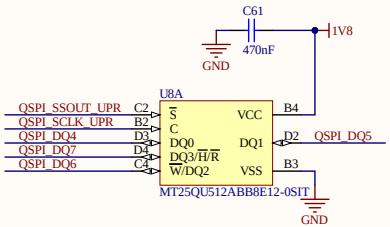


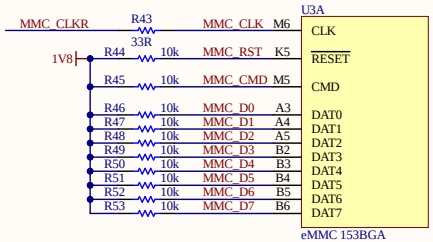


Alternative part MX25U51245GXDI00 supported by Xilinx.

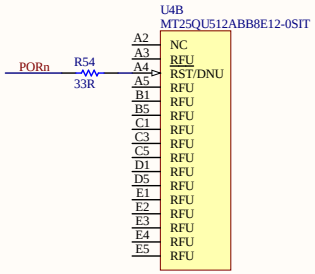


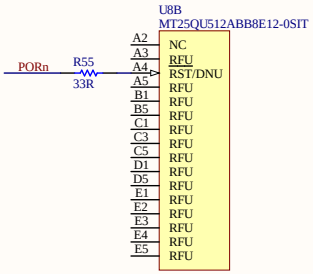


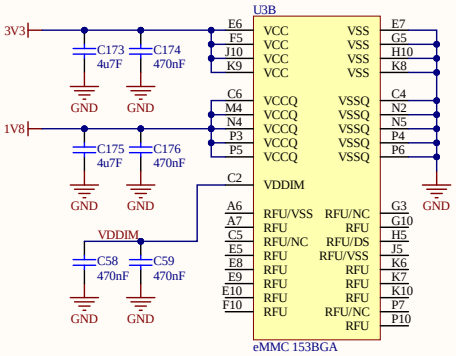


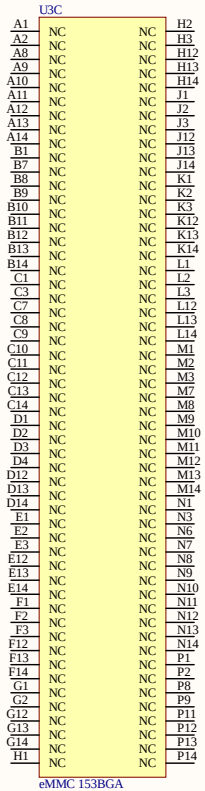


| | |
|---|---|
| Company: Sundance / Opteran | Project: ODK v1 |
| Title: Flash | Revision: 1v1 |
| Date: 5/4/22 | Sheet: 6 of 15 |
| Filename: Flash.SchDoc | Drawn: GKP |

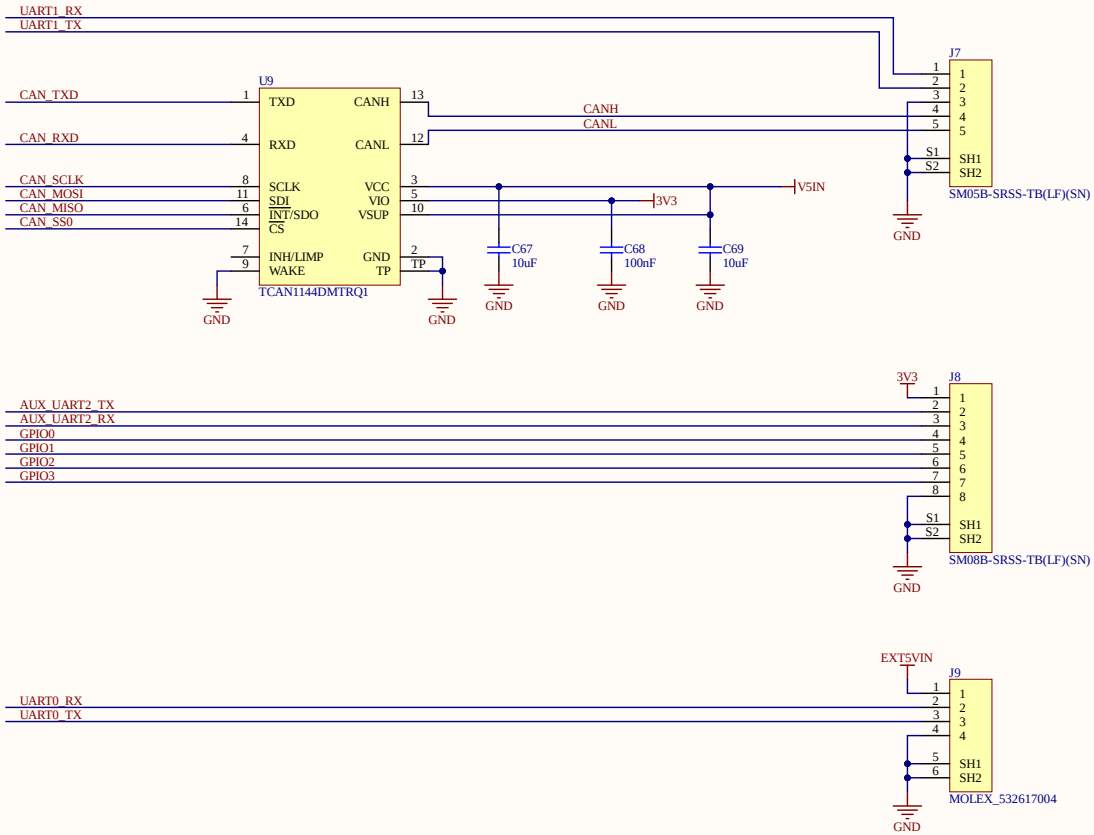


| | |
|---|---|
| Company: Sundance / Opteran | Project: ODK v1 |
| Title: CAN GPIO misc | Revision: 1v1 |
| Date: 5/4/22 | Sheet: 7 of 15 |
| Filename: CAN misc.SchDoc | Drawn: GKP |

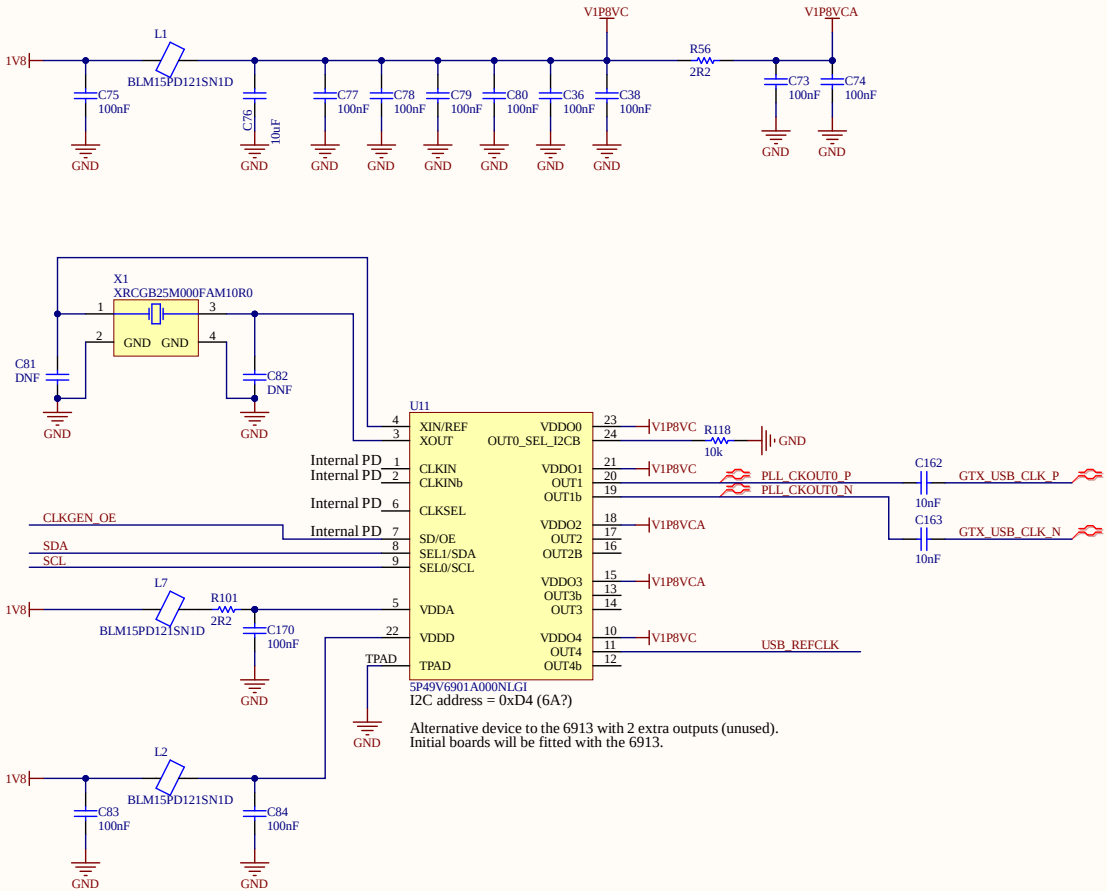


| | |
|---|---|
| Company: Sundance / Opteran | Project: ODK v1 |
| Title: Clock PLL | Revision: 1v1 |
| Date: 5/4/22 | Sheet: 8 of 15 |
| Filename: Clock PLL.SchDoc | Drawn: GKP |

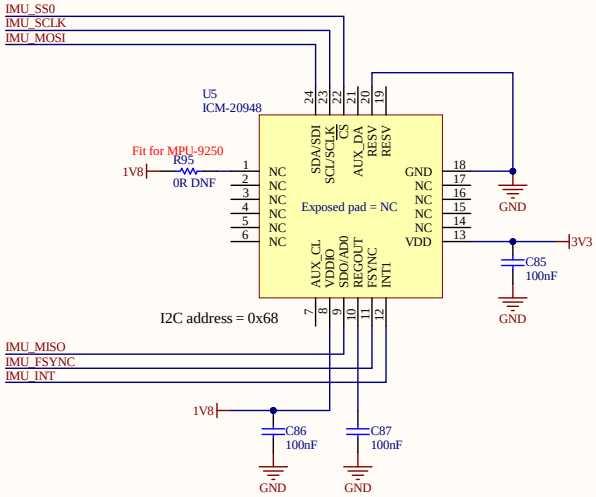


| | |
|---|---|
| Company: Sundance / Opteran | Project: ODK v1 |
| Title: IMU | Revision: 1v1 |
| Date: 5/4/22 | Sheet: 9 of 15 |
| Filename: IMU.SchDoc | Drawn: GKP |

| | |
|---|---|
| Company: Sundance / Opteran | Project: ODK v1 |
| Title: MIO 1 | Revision: 1v1 |
| Date: 5/4/22 | Sheet: 10of 15 |
| Filename: MIO 500-502.SchDoc | Drawn: GKP |

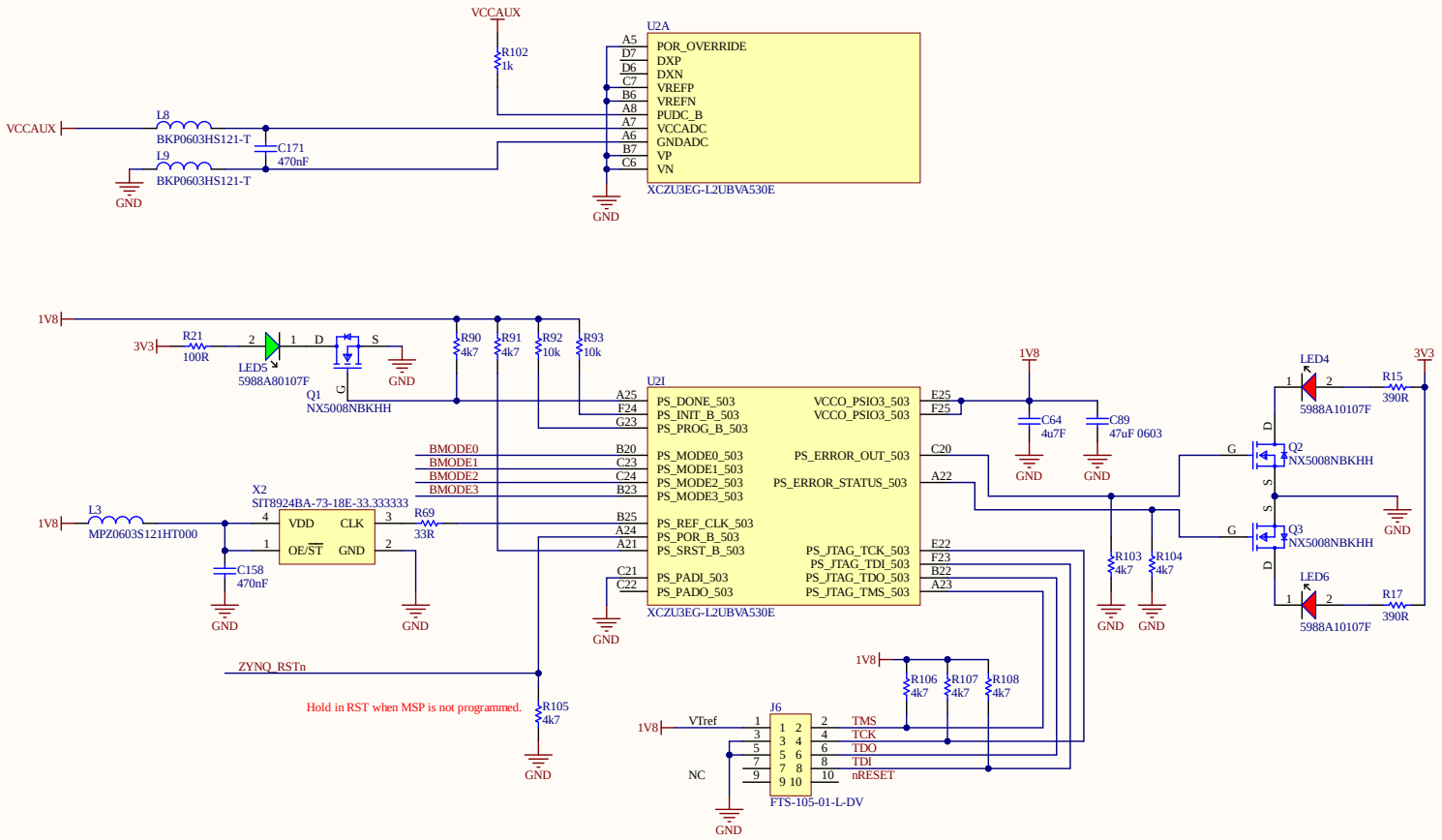


| | |
|---|---|
| Company: Sundance / Opteran | Project: ODK v1 |
| Title: FPGA JTAG | Revision: 1v1 |
| Date: 5/4/22 | Sheet: 11of 15 |
| Filename: FPGA JTAG.SchDoc | Drawn: GKP |

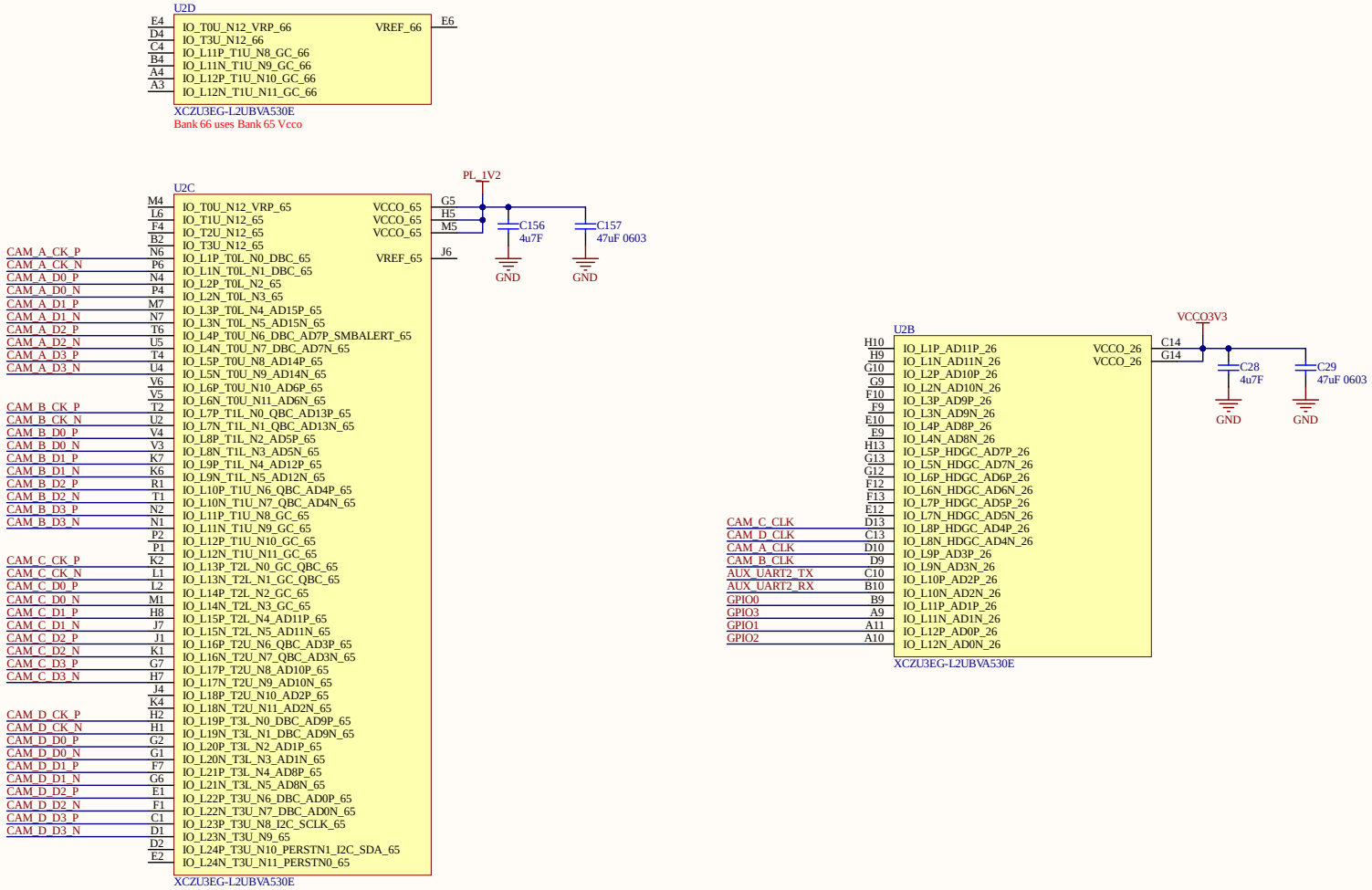


| | |
|---|---|
| Company: Sundance / Opteran | Project: ODK v1 |
| Title: FPGA PL 1 | Revision: 1v1 |
| Date: 5/4/22 | Sheet: 12of 15 |
| Filename: FPGA PL.SchDoc | Drawn: GKP |

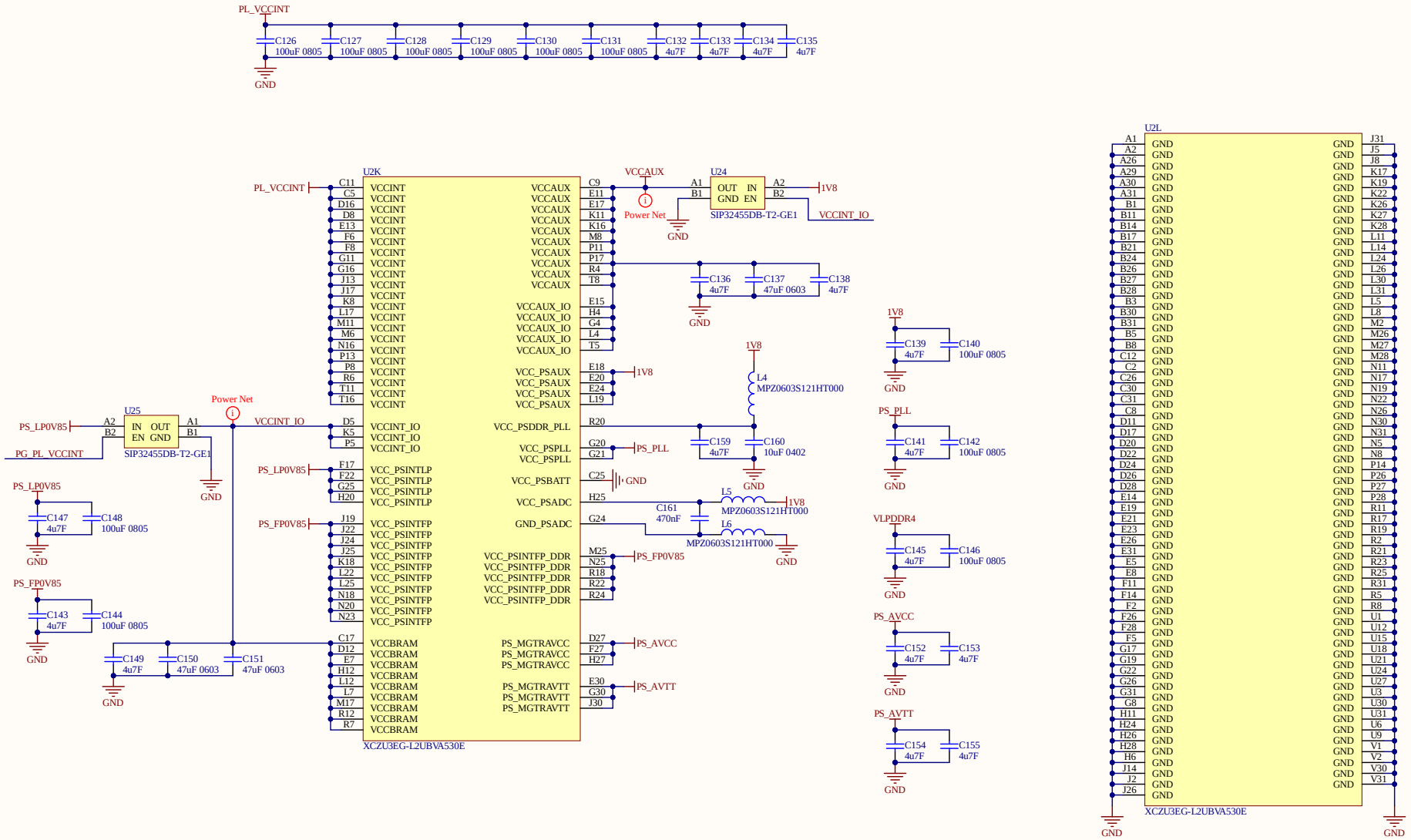


| | |
|---|---|
| Company: Sundance / Opteran | Project: ODK v1 |
| Title: FPGA Power | Revision: 1v1 |
| Date: 5/4/22 | Sheet: 13of 15 |
| Filename: FPGA Power.SchDoc | Drawn: GKP |

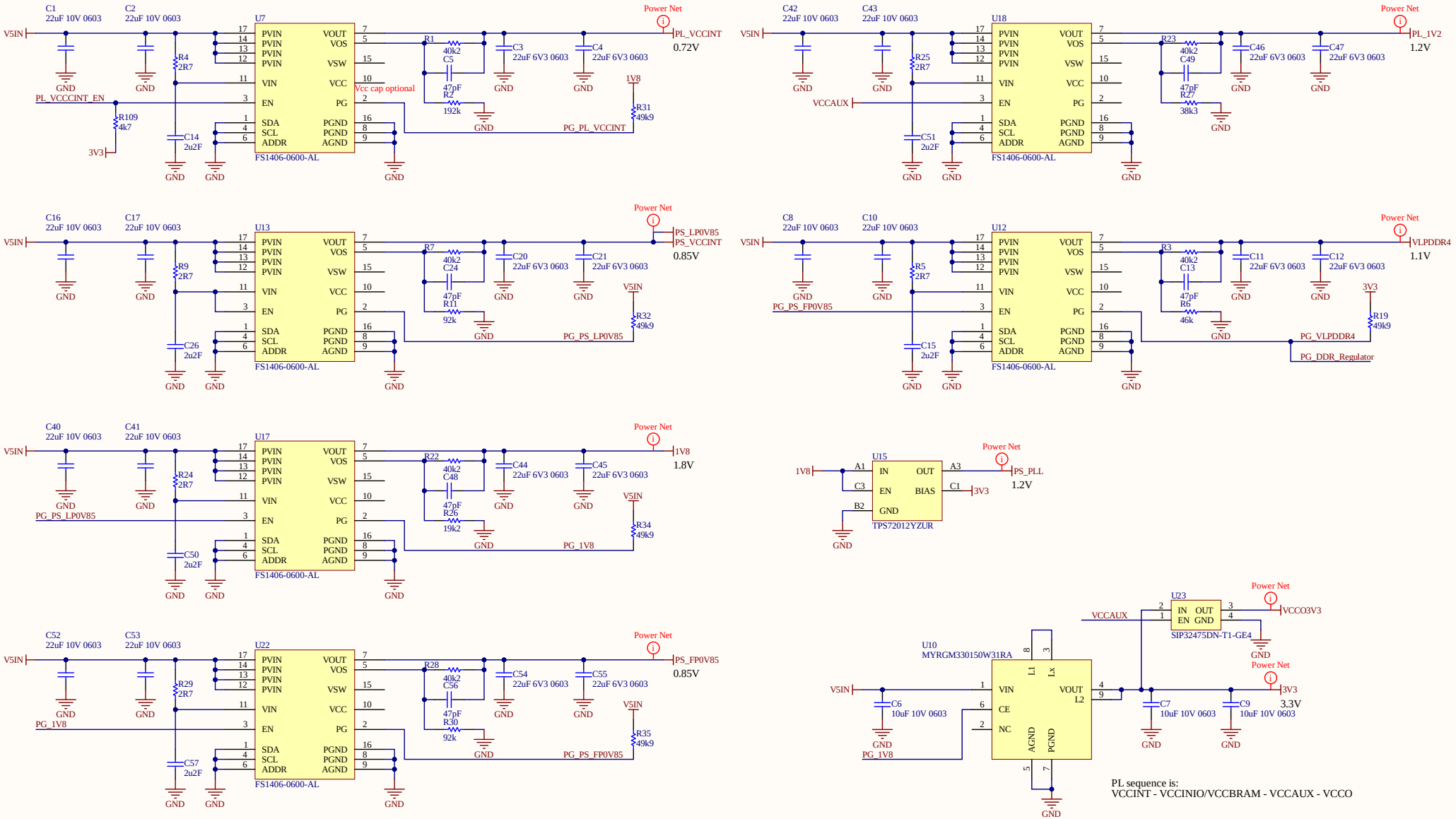


PL sequence is:
VCCINT - VCCINIO/VCCBRAM - VCCAUX - VCCO

| | |
|---|---|
| POWER ON | V5IN > PS_VCCINT/PS_LP0V85 > 1V8 > PS_PLL/3V3 > PS_FP0V85 > PG_VLPDDR4 |
| SIGNAL FROM PS | PL_VCCINT_EN > PL_VCCINT > VCCINT_IO > VCCAUX > VCCO3V3 |
| SIGNAL FORM MSP | EN_MGT > PS_AVCC > PS_AVTT |

| | |
|---|---|
| Company: Sundance / Opteran | Project: ODK v1 |
| Title: Power Supply | Revision: 1v1 |
| Date: 5/4/22 | Sheet: 14of 15 |
| Filename: Power Supply.SchDoc | Drawn: GKP |

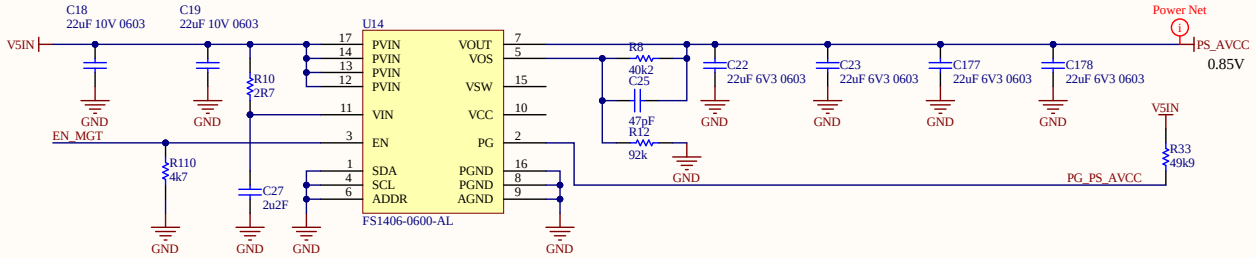


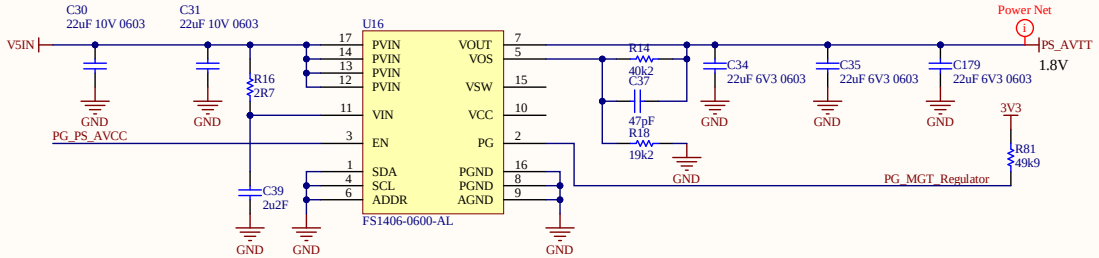


| | |
|---|---|
| Company: Sundance / Opteran | Project: ODK v1 |
| Title: Power Supply 2 | Revision: 1v1 |
| Date: 5/4/22 | Sheet: 15of 15 |
| Filename: Power Supply 2.SchDoc | Drawn: GKP |

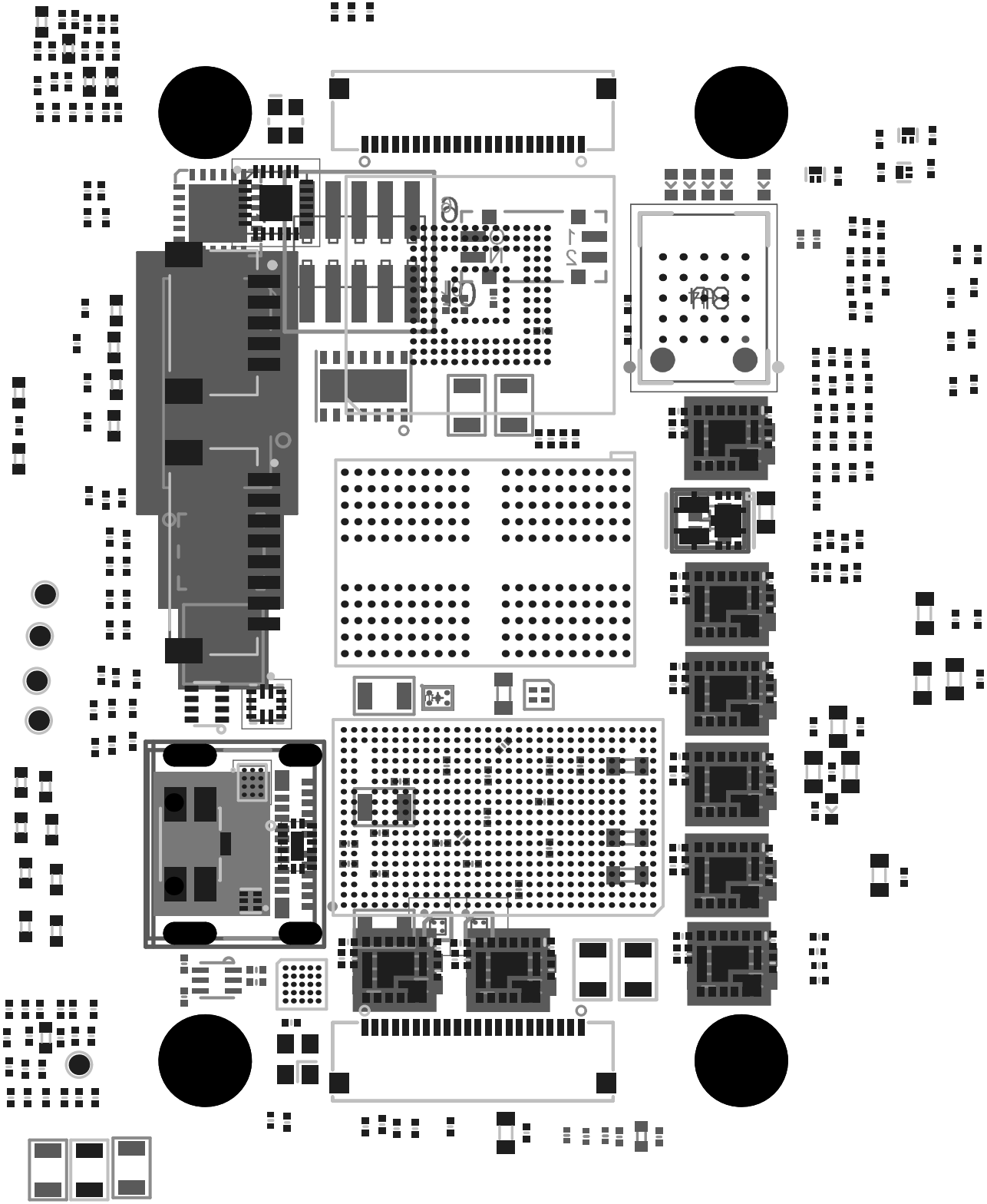

| CustomerID | Description | Designator | Footprint | Quantity | Comment | QuantityOrig |
|---|---|---|---|---|---|---|
| 25AF 10V 0603 | 25AF 10V 0603X9R | C1, C2, C4, C5, C10, C11, C18, C19, C20, C21, C26, C28, C32, C33, C34, C35, C36, C38, C39, C40, C41, C42, C43, C44, C45, C46, C47, C48, C49, C50, C51, C52, C53, C54, C55, C56, C57, C58, C59, C60, C61, C62, C63, C64, C65, C66, C67, C68, C69, C70, C71, C72, C73, C74, C75, C76, C77, C78, C79, C80, C81, C82, C83, C84, C85, C86, C87, C88, C89, C90, C91, C92, C93, C94, C95, C96, C97, C98, C99, C100, C101, C102, C103, C104, C105, C106, C107, C108, C109, C110, C111, C112, C113, C114, C115, C116, C117, C118, C119, C120, C121, C122, C123, C124, C125, C126, C127, C128, C129, C130, C131, C132, C133, C134, C135, C136, C137, C138, C139, C140, C141, C142, C143, C144, C145, C146, C147, C148, C149, C150, C151, C152, C153, C154, C155, C156, C157, C158, C159, C160, C161, C162, C163, C164, C165, C166, C167, C168, C169, C170, C171, C172, C173, C174, C175, C176, C177, C178, C179, C180, C181, C182, C183, C184, C185, C186, C187, C188, C189, C190, C191, C192, C193, C194, C195, C196, C197, C198, C199, C200, C201, C202, C203, C204, C205, C206, C207, C208, C209, C210, C211, C212, C213, C214, C215, C216, C217, C218, C219, C220, C221, C222, C223, C224, C225, C226, C227, C228, C229, C230, C231, C232, C233, C234, C235, C236, C237, C238, C239, C240, C241, C242, C243, C244, C245, C246, C247, C248, C249, C250, C251, C252, C253, C254, C255, C256, C257, C258, C259, C260, C261, C262, C263, C264, C265, C266, C267, C268, C269, C270, C271, C272, C273, C274, C275, C276, C277, C278, C279, C280, C281, C282, C283, C284, C285, C286, C287, C288, C289, C290, C291, C292, C293, C294, C295, C296, C297, C298, C299, C300, C301, C302, C303, C304, C305, C306, C307, C308, C309, C310, C311, C312, C313, C314, C315, C316, C317, C318, C319, C320, C321, C322, C323, C324, C325, C326, C327, C328, C329, C330, C331, C332, C333, C334, C335, C336, C337, C338, C339, C340, C341, C342, C343, C344, C345, C346, C347, C348, C349, C350, C351, C352, C353, C354, C355, C356, C357, C358, C359, C360, C361, C362, C363, C364, C365, C366, C367, C368, C369, C370, C371, C372, C373, C374, C375, C376, C377, C378, C379, C380, C381, C382, C383, C384, C385, C386, C387, C388, C389, C390, C391, C392, C393, C394, C395, C396, C397, C398, C399, C400, C401, C402, C403, C404, C405, C406, C407, C408, C409, C410, C411, C412, C413, C414, C415, C416, C417, C418, C419, C420, C421, C422, C423, C424, C425, C426, C427, C428, C429, C430, C431, C432, C433, C434, C435, C436, C437, C438, C439, C440, C441, C442, C443, C444, C445, C446, C447, C448, C449, C450, C451, C452, C453, C454, C455, C456, C457, C458, C459, C460, C461, C462, C463, C464, C465, C466, C467, C468, C469, C470, C471, C472, C473, C474, C475, C476, C477, C478, C479, C480, C481, C482, C483, C484, C485, C486, C487, C488, C489, C490, C491, C492, C493, C494, C495, C496, C497, C498, C499, C500, C501, C502, C503, C504, C505, C506, C507, C508, C509, C510, C511, C512, C513, C514, C515, C516, C517, C518, C519, C520, C521, C522, C523, C524, C525, C526, C527, C528, C529, C530, C531, C532, C533, C534, C535, C536, C537, C538, C539, C540, C541, C542, C543, C544, C545, C546, C547, C548, C549, C550, C551, C552, C553, C554, C555, C556, C557, C558, C559, C560, C561, C562, C563, C564, C565, C566, C567, C568, C569, C570, C571, C572, C573, C574, C575, C576, C577, C578, C579, C580, C581, C582, C583, C584, C585, C586, C587, C588, C589, C590, C591, C592, C593, C594, C595, C596, C597, C598, C599, C600, C601, C602, C603, C604, C605, C606, C607, C608, C609, C610, C611, C612, C613, C614, C615, C616, C617, C618, C619, C620, C621, C622, C623, C624, C625, C626, C627, C628, C629, C630, C631, C632, C633, C634, C635, C636, C637, C638, C639, C640, C641, C642, C643, C644, C645, C646, C647, C648, C649, C650, C651, C652, C653, C654, C655, C656, C657, C658, C659, C660, C661, C662, C663, C664, C665, C666, C667, C668, C669, C670, C671, C672, C673, C674, C675, C676, C677, C678, C679, C680, C681, C682, C683, C684, C685, C686, C687, C688, C689, C690, C691, C692, C693, C694, C695, C696, C697, C698, C699, C700, C701, C702, C703, C704, C705, C706, C707, C708, C709, C710, C711, C712, C713, C714, C715, C716, C717, C718, C719, C720, C721, C722, C723, C724, C725, C726, C727, C728, C729, C730, C731, C732, C733, C734, C735, C736, C737, C738, C739, C740, C741, C742, C743, C744, C745, C746, C747, C748, C749, C750, C751, C752, C753, C754, C755, C756, C757, C758, C759, C760, C761, C762, C763, C764, C765, C766, C767, C768, C769, C770, C771, C772, C773, C774, C775, C776, C777, C778, C779, C780, C781, C782, C783, C784, C785, C786, C787, C788, C789, C790, C791, C792, C793, C794, C795, C796, C797, C798, C799, C800, C801, C802, C803, C804, C805, C806, C807, C808, C809, C810, C811, C812, C813, C814, C815, C816, C817, C818, C819, C820, C821, C822, C823, C824, C825, C826, C827, C828, C829, C830, C831, C832, C833, C834, C835, C836, C837, C838, C839, C840, C841, C842, C843, C844, C845, C846, C847, C848, C849, C850, C851, C852, C853, C854, C855, C856, C857, C858, C859, C860, C861, C862, C863, C864, C865, C866, C867, C868, C869, C870, C871, C872, C873, C874, C875, C876, C877, C878, C879, C880, C881, C882, C883, C884, C885, C886, C887, C888, C889, C890, C891, C892, C893, C894, C895, C896, C897, C898, C899, C900, C901, C902, C903, C904, C905, C906, C907, C908, C909, C910, C911, C912, C913, C914, C915, C916, C917, C918, C919, C920, C921, C922, C923, C924, C925, C926, C927, C928, C929, C930, C931, C932, C933, C934, C935, C936, C937, C938, C939, C940, C941, C942, C943, C944, C945, C946, C947, C948, C949, C950, C951, C952, C953, C954, C955, C956, C957, C958, C959, C960, C961, C962, C963, C964, C965, C966, C967, C968, C969, C970, C971, C972, C973, C974, C975, C976, C977, C978, C979, C980, C981, C982, C983, C984, C985, C986, C987, C988, C989, C990, C991, C992, C993, C994, C995, C996, C997, C998, C999, C1000 | CAP0603 | Cap0603 | 1000 |
| 25AF 6V3 0603 | 25AF 6V3 0603X9R | C3, C6, C7, C8, C9, C12, C13, C14, C15, C16, C17, C23, C24, C25, C27, C29, C30, C31, C37, C38, C39, C40, C41, C42, C43, C44, C45, C46, C47, C48, C49, C50, C51, C52, C53, C54, C55, C56, C57, C58, C59, C60, C61, C62, C63, C64, C65, C66, C67, C68, C69, C70, C71, C72, C73, C74, C75, C76, C77, C78, C79, C80, C81, C82, C83, C84, C85, C86, C87, C88, C89, C90, C91, C92, C93, C94, C95, C96, C97, C98, C99, C100, C101, C102, C103, C104, C105, C106, C107, C108, C109, C110, C111, C112, C113, C114, C115, C116, C117, C118, C119, C120, C121, C122, C123, C124, C125, C126, C127, C128, C129, C130, C131, C132, C133, C134, C135, C136, C137, C138, C139, C140, C141, C142, C143, C144, C145, C146, C147, C148, C149, C150, C151, C152, C153, C154, C155, C156, C157, C158, C159, C160, C161, C162, C163, C164, C165, C166, C167, C168, C169, C170, C171, C172, C173, C174, C175, C176, C177, C178, C179, C180, C181, C182, C183, C184, C185, C186, C187, C188, C189, C190, C191, C192, C193, C194, C195, C196, C197, C198, C199, C200, C201, C202, C203, C204, C205, C206, C207, C208, C209, C210, C211, C212, C213, C214, C215, C216, C217, C218, C219, C220, C221, C222, C223, C224, C225, C226, C227, C228, C229, C230, C231, C232, C233, C234, C235, C236, C237, C238, C239, C240, C241, C242, C243, C244, C245, C246, C247, C248, C249, C250, C251, C252, C253, C254, C255, C256, C257, C258, C259, C260, C261, C262, C263, C264, C265, C266, C267, C268, C269, C270, C271, C272, C273, C274, C275, C276, C277, C278, C279, C280, C281, C282, C283, C284, C285, C286, C287, C288, C289, C290, C291, C292, C293, C294, C295, C296, C297, C298, C299, C300, C301, C302, C303, C304, C305, C306, C307, C308, C309, C310, C311, C312, C313, C314, C315, C316, C317, C318, C319, C320, C321, C322, C323, C324, C325, C326, C327, C328, C329, C330, C331, C332, C333, C334, C335, C336, C337, C338, C339, C340, C341, C342, C343, C344, C345, C346, C347, C348, C349, C350, C351, C352, C353, C354, C355, C356, C357, C358, C359, C360, C361, C362, C363, C364, C365, C366, C367, C368, C369, C370, C371, C372, C373, C374, C375, C376, C377, C378, C379, C380, C381, C382, C383, C384, C385, C386, C387, C388, C389, C390, C391, C392, C393, C394, C395, C396, C397, C398, C399, C400, C401, C402, C403, C404, C405, C406, C407, C408, C409, C410, C411, C412, C413, C414, C415, C416, C417, C418, C419, C420, C421, C422, C423, C424, C425, C426, C427, C428, C429, C430, C431, C432, C433, C434, C435, C436, C437, C438, C439, C440, C441, C442, C443, C444, C445, C446, C447, C448, C449, C450, C451, C452, C453, C454, C455, C456, C457, C458, C459, C460, C461, C462, C463, C464, C465, C466, C467, C468, C469, C470, C471, C472, C473, C474, C475, C476, C477, C478, C479, C480, C481, C482, C483, C484, C485, C486, C487, C488, C489, C490, C491, C492, C493, C494, C495, C496, C497, C498, C499, C500, C501, C502, C503, C504, C505, C506, C507, C508, C509, C510, C511, C512, C513, C514, C515, C516, C517, C518, C519, C520, C521, C522, C523, C524, C525, C526, C527, C528, C529, C530, C531, C532, C533, C534, C535, C536, C537, C538, C539, C540, C541, C542, C543, C544, C545, C546, C547, C548, C549, C550, C551, C552, C553, C554, C555, C556, C557, C558, C559, C560, C561, C562, C563, C564, C565, C566, C567, C568, C569, C570, C571, C572, C573, C574, C575, C576, C577, C578, C579, C580, C581, C582, C583, C584, C585, C586, C587, C588, C589, C590, C591, C592, C593, C594, C595, C596, C597, C598, C599, C600, C601, C602, C603, C604, C605, C606, C607, C608, C609, C610, C611, C612, C613, C614, C615, C616, C617, C618, C619, C620, C621, C622, C623, C624, C625, C626, C627, C628, C629, C630, C631, C632, C633, C634, C635, C636, C637, C638, C639, C640, C641, C642, C643, C644, C645, C646, C647, C648, C649, C650, C651, C652, C653, C654, C655, C656, C657, C658, C659, C660, C661, C662, C663, C664, C665, C666, C667, C668, C669, C670, C671, C672, C673, C674, C675, C676, C677, C678, C679, C680, C681, C682, C683, C684, C685, C686, C687, C688, C689, C690, C691, C692, C693, C694, C695, C696, C697, C698, C699, C700, C701, C702, C703, C704, C705, C706, C707, C708, C709, C710, C711, C712, C713, C714, C715, C716, C717, C718, C719, C720, C721, C722, C723, C724, C725, C726, C727, C728, C729, C730, C731, C732, C733, C734, C735, C736, C737, C738, C739, C740, C741, C742, C743, C744, C745, C746, C747, C748, C749, C750, C751, C752, C753, C754, C755, C756, C757, C758, C759, C760, C761, C762, C763, C764, C765, C766, C767, C768, C769, C770, C771, C772, C773, C774, C775, C776, C777, C778, C779, C780, C781, C782, C783, C784, C785, C786, C787, C788, C789, C790, C791, C792, C793, C794, C795, C796, C797, C798, C799, C800, C801, C802, C803, C804, C805, C806, C807, C808, C809, C810, C811, C812, C813, C814, C815, C816, C817, C818, C819, C820, C821, C822, C823, C824, C825, C826, C827, C828, C829, C830, C831, C832, C833, C834, C835, C836, C837, C838, C839, C840, C841, C842, C843, C844, C845, C846, C847, C848, C849, C850, C851, C852, C853, C854, C855, C856, C857, C858, C859, C860, C861, C862, C863, C864, C865, C866, C867, C868, C869, C870, C871, C872, C873, C874, C875, C876, C877, C878, C879, C880, C881, C882, C883, C884, C885, C886, C887, C888, C889, C890, C891, C892, C893, C894, C895, C896, C897, C898, C899, C900, C901, C902, C903, C904, C905, C906, C907, C908, C909, C910, C911, C912, C913, C914, C915, C916, C917, C918, C919, C920, C921, C922, C923, C924, C925, C926, C927, C928, C929, C930, C931, C932, C933, C934, C935, C936, C937, C938, C939, C940, C941, C942, C943, C944, C945, C946, C947, C948, C949, C950, C951, C952, C953, C954, C955, C956, C957, C958, C959, C960, C961, C962, C963, C964, C965, C966, C967, C968, C969, C970, C971, C972, C973, C974, C975, C976, C977, C978, C979, C980, C981, C982, C983, C984, C985, C986, C987, C988, C989, C990, C991, C992, C993, C994, C995, C996, C997, C998, C999, C1000 | CAP0603 | Cap0603 | 1000 |
| 25AF 6V3 0603 | 25AF 6V3 0603X9R | C3, C6, C7, C8, C9, C12, C13, C14, C15, C16, C17, C23, C24, C25, C27, C29, C30, C31, C37, C38, C39, C40, C41, C42, C43, C44, C45, C46, C47, C48, C49, C50, C51, C52, C53, C54, C55, C56, C57, C58, C59, C60, C61, C62, C63, C64, C65, C66, C67, C68, C69, C70, C71, C72, C73, C74, C75, C76, C77, C78, C79, C80, C81, C82, C83, C84, C85, C86, C87, C88, C89, C90, C91, C92, C93, C94, C95, C96, C97, C98, C99, C100, C101, C102, C103, C104, C105, C106, C107, C108, C109, C110, C111, C112, C113, C114, C115, C116, C117, C118, C119, C120, C121, C122, C123, C124, C125, C126, C127, C128, C129, C130, C131, C132, C133, C134, C135, C136, C137, C138, C139, C140, C141, C142, C143, C144, C145, C146, C147, C148, C149, C150, C151, C152, C153, C154, C155, C156, C157, C158, C159, C160, C161, C162, C163, C164, C165, C166, C167, C168, C169, C170, C171, C172, C173, C174, C175, C176, C177, C178, C179, C180, C181, C182, C183, C184, C185, C186, C187, C188, C189, C190, C191, C192, C193, C194, C195, C196, C197, C198, C199, C200, C201, C202, C203, C204, C205, C206, C207, C208, C209, C210, C211, C212, C213, C214, C215, C216, C217, C218, C219, C220, C221, C222, C223, C224, C225, C226, C227, C228, C229, C230, C231, C232, C233, C234, C235, C236, C237, C238, C239, C240, C241, C242, C243, C244, C245, C246, C247, C248, C249, C250, C251, C252, C253, C254, C255, C256, C257, C258, C259, C260, C261, C262, C263, C264, C265, C266, C267, C268, C269, C270, C271, C272, C273, C274, C275, C276, C277, C278, C279, C280, C281, C282, C283, C284, C285, C286, C287, C288, C289, C290, C291, C292, C293, C294, C295, C296, C297, C298, C299, C300, C301, C302, C303, C304, C305, C306, C307, C308, C309, C310, C311, C312, C313, C314, C315, C316, C317, C318, C319, C320, C321, C322, C323, C324, C325, C326, C327, C328, C329, C330, C331, C332, C333, C334, C335, C336, C337, C338, C339, C340, C341, C342, C343, C344, C345, C346, C347, C348, C349, C350, C351, C352, C353, C354, C355, C356, C357, C358, C359, C360, C361, C362, C363, C364, C365, C366, C367, C368, C369, C370, C371, C372, C373, C374, C375, C376, C377, C378, C379, C380, C381, C382, C383, C384, C385, C386, C387, C388, C389, C390, C391, C392, C393, C394, C395, C396, C397, C398, C399, C400, C401, C402, C403, C404, C405, C406, C407, C408, C409, C410, C411, C412, C413, C414, C415, C416, C417, C418, C419, C420, C421, C422, C423, C424, C425, C426, C427, C428, C429, C430, C431, C432, C433, C434, C435, C436, C437, C438, C439, C440, C441, C442, C443, C444, C445, C446, C447, C448, C449, C450, C451, C452, C453, C454, C455, C456, C457, C458, C459, C460, C461, C462, C463, C464, C465, C466, C467, C468, C469, C470, C471, C472, C473, C474, C475, C476, C477, C478, C479, C480, C481, C482, C483, C484, C485, C486, C487, C488, C489, C490, C491, C492, C493, C494, C495, C496, C497, C498, C499, C500, C501, C502, C503, C504, C505, C506, C507, C508, C509, C510, C511, C512, C513, C514, C515, C516, C517, C518, C519, C520, C521, C522, C523, C524, C525, C526, C527, C528, C529, C530, C531, C532, C533, C534, C535, C536, C537, C538, C539, C540, C541, C542, C543, C544, C545, C546, C547, C548, C549, C550, C551, C552, C553, C554, C555, C556, C557, C558, C559, C560, C561, C562, C563, C564, C565, C566, C567, C568, C569, C570, C571, C572, C573, C574, C575, C576, C577, C578, C579, C580, C581, C582, C583, C584, C585, C586, C587, C588, C589, C590, C591, C592, C593, C594, C595, C596, C597, C598, C599, C600, C601, C602, C603, C604, C605, C606, C607, C608, C609, C610, C611, C612, C613, C614, C615, C616, C617, C618, C619, C620, C621, C622, C623, C624, C625, C626, C627, C628, C629, C630, C631, C632, C633, C634, C635, C636, C637, C638, C639, C640, C641, C642, C643, C644, C645, C646, C647, C648, C649, C650, C651, C652, C653, C654, C655, C656, C657, C658, C659, C660, C661, C662, C663, C664, C665, C666, C667, C668, C669, C670, C671, C672, C673, C674, C675, C676, C677, C678, C679, C680, C681, C682, C683, C684, C685, C686, C687, C688, C689, C690, C691, C692, C693, C694, C695, C696, C697, C698, C699, C700, C701, C702, C703, C704, C705, C706, C707, C708, C709, C710, C711, C712, C713, C714, C715, C716, C717, C718, C719, C720, C721, C722, C723, C724, C725, C726, C727, C728, C729, C730, C731, C732, C733, C734, C735, C736, C737, C738, C739, C740, C741, C742, C743, C744, C745, C746, C747, C748, C749, C750, C751, C752, C753, C754, C755, C756, C757, C758, C759, C760, C761, C762, C763, C764, C765, C766, C767, C768, C769, C770, C771, C772, C773, C774, C775, C776, C777, C778, C779, C780, C781, C782, C783, C784, C785, C786, C787, C788, C789, C790, C791, C792, C793, C794, C795, C796, C797, C798, C799, C800, C801, C802, C803, C804, C805, C806, C807, C808, C809, C810, C811, C812, C813, C814, C815, C816, C817, C818, C819, C820, C821, C822, C823, C824, C825, C826, C827, C828, C829, C830, C831, C832, C833, C834, C835, C836, C837, C838, C839, C840, C841, C842, C843, C844, C845, C846, C847, C848, C849, C850, C851, C852, C853, C854, C855, C856, C857, C858, C859, C860, C861, C862, C863, C864, C865, C866, C867, C868, C869, C870, C871, C872, C873, C874, C875, C876, C877, C878, C879, C880, C881, C882, C883, C884, C885, C886, C887, C888, C889, C890, C891, C892, C893, C894, C895, C896, C897, C898, C899, C900, C901, C902, C903, C904, C905, C906, C907, C908, C909, C910, C911, C912, C913, C914, C915, C916, C917, C918, C919, C920, C921, C922, C923, C924, C925, C926, C927, C928, C929, C930, C931, C932, C933, C934, C935, C936, C937, C938, C939, C940, C941, C942, C943, C944, C945, C946, C947, C948, C949, C950, C951, C952, C953, C954, C955, C956, C957, C958, C959, C960, C961, C962, C963, C964, C965, C966, C967, C968, C969, C970, C971, C972, C973, C974, C975, C976, C977, C978, C979, C980, C981, C982, C983, C984, C985, C986, C987, C988, C989, C990, C991, C992, C993, C994, C995, C996, C997, C998, C999, C1000 | CAP0603 | Cap0603 | 1000 |
| 25BAP | 25AP 0201 6V3 X5R | C1, C2, C3, C4, C5, C6, C7, C8, C9, C10, C11, C12, C13, C14, C15, C16, C17, C18, C19, C20, C21, C22, C23, C24, C25, C26, C27, C28, C29, C30, C31, C32, C33, C34, C35, C36, C37, C38, C39, C40, C41, C42, C43, C44, C45, C46, C47, C48, C49, C50, C51, C52, C53, C54, C55, C56, C57, C58, C59, C60, C61, C62, C63, C64, C65, C66, C67, C68, C69, C70, C71, C72, C73, C74, C75, C76, C77, C78, C79, C80, C81, C82, C83, C84, C85, C86, C87, C88, C89, C90, C91, C92, C93, C94, C95, C96, C97, C98, C99, C100, C101, C102, C103, C104, C105, C106, C107, C108, C109, C110, C111, C112, C113, C114, C115, C116, C117, C118, C119, C120, C121, C122, C123, C124, C125, C126, C127, C128, C129, C130, C131, C132, C133, C134, C135, C136, C137, C138, C139, C140, C141, C142, C143, C144, C145, C146, C147, C148, C149, C150, C151, C152, C153, C154, C155, C156, C157, C158, C159, C160, C161, C162, C163, C164, C165, C166, C167, C168, C169, C170, C171, C172, C173, C174, C175, C176, C177, C178, C179, C180, C181, C182, C183, C184, C185, C186, C187, C188, C189, C190, C191, C192, C193, C194, C195, C196, C197, C198, C199, C200, C201, C202, C203, C204, C205, C206, C207, C208, C209, C210, C211, C212, C213, C214, C215, C216, C217, C218, C219, C220, C221, C222, C223, C224, C225, C226, C227, C228, C229, C230, C231, C232, C233, C234, C235, C236, C237, C238, C239, C240, C241, C242, C243, C244, C245, C246, C247, C248, C249, C250, C251, C252, C253, C254, C255, C256, C257, C258, C259, C260, C261, C262, C263, C264, C265, C266, C267, C268, C269, C270, C271, C272, C273, C274, C275, C276, C277, C278, C279, C280, C281, C282, C283, C284, C285, C286, C287, C288, C289, C290, C291, C292, C293, C294, C295, C296, C297, C298, C299, C300, C301, C302, C303, C304, C305, C306, C307, C308, C309, C310, C311, C312, C313, C314, C315, C316, C317, C318, C319, C320, C321, C322, C323, C324, C325, C326, C327, C328, C329, C330, C331, C332, C333, C334, C335, C336, C337, C338, C339, C340, C341, C342, C343, C344, C345, C346, C347, C348, C349, C350, C351, C352, C353, C354, C355, C356, C357, C358, C359, C360, C361, C362, C363, C364, C365, C366, C367, C368, C369, C370, C371, C372, C373, C374, C375, C376, C377, C378, C379, C380, C381, C382, C383, C384, C385, C386, C387, C388, C389, C390, C391, C392, C393, C394, C395, C396, C397, C398, C399, C400, C401, C402, C403, C404, C405, C406, C407, C408, C409, C410, C411, C412, C413, C414, C415, C416, C417, C418, C419, C420, C421, C422, C423, C424, C425, C426, C427, C428, C429, C430, C431, C432, C433, C434, C435, C436, C437, C438, C439, C440, C441, C442, C443, C444, C445, C446, C447, C448, C449, C450, C451, C452, C453, C454, C455, C456, C457, C458, C459, C460, C461, C462, C463, C464, C465, C466, C467, C468, C469, C470, C471, C472, C473, C474, C475, C476, C477, C478, C479, C480, C481, C482, C483, C484, C485, C486, C487, C488, C489, C490, C491, C492, C493, C494, C495, C496, C497, C498, C499, C500, C501, C502, C503, C504, C505, C506, C507, C508, C509, C510, C511, C512, C513, C514, C515, C516, C517, C518, C519, C520, C521, C522, C523, C524, C525, C526, C527, C528, C529, C530, C531, C532, C533, C534, C535, C536, C537, C538, C539, C540, C541, C542, C543, C544, C545, C546, C547, C548, C549, C550, C551, C552, C553, C554, C555, C556, C557, C558, C559, C560, C561, C562, C563, C564, C565, C566, C567, C568, C569, C570, C571, C572, C573, C574, C575, C576, C577, C578, C579, C580, C581, C582, C583, C584, C585, C586, C587, C588, C589, C590, C591, C592, C593, C594, C595, C596, C597, C598, C599, C600, C601, C602, C603, C604, C605, C606, C607, C608, C609, C610, C611, C612, C613, C614, C615, C616, C617, C618, C619, C620, C621, C622, C623, C624, C625, C626, C627, C628, C629, C630, C631, C632, C633, C634, C635, C636, C637, C638, C639, C640, C641, C642, C643, C644, C645, C646, C647, C648, C649, C650, C651, C652, C653, C654, C655, C656, C657, C658, C659, C660, C661, C662, C663, C664, C665, C666, C667, C668, C669, C670, C671, C672, C673, C674, C675, C676, C677, C678, C679, C680, C681, C682, C683, C684, C685, C686, C687, C688, C689, C690, C691, C692, C693, C694, C695, C696, C697, C698, C699, C700, C701, C702, C703, C704, C705, C706, C707, C708, C709, C710, C711, C712, C713, C714, C715, C716, C717, C718, C719, C720, C721, C722, C723, C724, C725, C726, C727, C728, C729, C730, C731, C732, C733, C734, C735, C736, C737, C738, C739, C740, C741, C742, C743, C744, C745, C746, C747, C748, C749, C750, C751, C752, C753, C754, C755, C756, C757, C758, C759, C760, C761, C762, C763, C764, C765, C766, C767, C768, C769, C770, C771, C772, C773, C774, C775, C776, C777, C778, C779, C780, C781, C782, C783, C784, C785, C786, C787, C788, C789, C790, C791, C792, C793, C794, C795, C796, C797, C798, C799, C800, C801, C802, C803, C804, C805, C806, C807, C808, C809, C810, C811, C812, C813, C814, C815, C816, C817, C818, C819, C820, C821, C822, C823, C824, C825, C826, C827, C828, C829, C830, C831, C832, C833, C834, C835, C836, C837, C838, C839, C840, C841, C842, C843, C844, C845, C846, C847, C848, C849, C850, C851, C852, C853, C854, C855, C856, C857, C858, C859, C860, C861, C862, C863, C864, C865, C866, C867, C868, C869, C870, C871, C872, C873, C874, C875, C876, C877, C878, C879, C880, C881, C882, C883, C884, C885, C886, C887, C888, C889, C890, C891, C892, C893, C894, C895, C896, C897, C898, C899, C900, C901, C902, C903, C904, C905, C906, C907, C908, C909, C910, C911, C912, C913, C914, C915, C916, C917, C918, C919, C920, C921, C922, C923, C924, C925, C926, C927, C928, C929, C930, C931, C932, C933, C934, C935, C936, C937, C938, C939, C940, C941, C942, C943, C944, C945, C946, C947, C948, C949, C950, C951, C952, C953, C954, C955, C956, C957, C958, C959, C960, C961, C962, C963, C964, C965, C966, C967, C968, C969, C970, C971, C972, C973, C974, C975, C976, C977, C978, C979, C980, C981, C982, C983, C984, C985, C986, C987, C988, C989, C990, C991, C992, C993, C994, C995, C996, C997, C998, C999, C1000 | CAP0201 | Cap0201 | 1000 |
| 25BAP | 25AP 0201 6V3 X5R | C1, C2, C3, C4, C5, C6, C7, C8, C9, C10, C11, C12, C13, C14, C15, C16, C17, C18, C19, C20, C21, C22, C23, C24, C25, C26, C27, C28, C29, C30, C31, C32, C33, C34, C35, C36, C37, C38, C39, C40, C41, C42, C43, C44, C45, C46, C47, C48, C49, C50, C51, C52, C53, C54, C55, C56, C57, C58, C59, C60, C61, C62, C63, C64, C65, C66, C67, C68, C69, C70, C71, C72, C73, C74, C75, C76, C77, C78, C79, C80, C81, C82, C83, C84, C85, C86, C87, C88, C89, C90, C91, C92, C93, C94, C95, C96, C97, C98, C99, C100, C101, C102, C103, C104, C105, C106, C107, C108, C109, C110, C111, C112, C113, C114, C115, C116, C117, C118, C119, C120, C121, C122, C123, C124, C125, C126, C127, C128, C129, C130, C131, C132, C133, C134, C135, C136, C137, C138, C139, C140, C141, C142, C143, C144, C145, C146, C147, C148, C149, C150, C151, C152, C153, C154, C155, C156, C157, C158, C159, C160, C161, C162, C163, C164, C165, C166, C167, C168, C169, C170, C171, C172, C173, C174, C175, C176, C177, C178, C179, C180, C181, C182, C183, C184, C185, C186, C187, C188, C189, C190, C191, C192, C193, C194, C195, C196, C197, C198, C199, C200, C201, C202, C203, C204, C205, C206, C207, C208, C209, C210, C211, C212, C213, C214, C215, C216, C217, C218, C219, C220, C221, C222, C223, C224, C225, C226, C227, C228, C229, C230, C231, C232, C233, C234, C235, C236, C237, C238, C239, C240, C241, C242, C243, C244, C245, C246, C247, C248, C249, C250, C251, C252, C253, C254, C255, C256, C257, C258, C259, C260, C261, C262, C263, C264, C265, C266, C267, C268, C269, C270, C271, C272, C273, C274, C275, C276, C277, C278, C279, C280, C281, C282, C283, C284, C285, C286, C287, C288, C289, C290, C291, C292, C293, C294, C295, C296, C297, C298, C299, C300, C301, C302, C303, C304, C305, C306, C307, C308, C309, C310, C311, C312, C313, C314, C315, C316, C317, C318, C319, C320, C321, C322, C323, C324, C325, C326, C327, C328, C329, C330, C331, C332, C333, C334, C335, C336, C337, C338, C339, C340, C341, C342, C343, C344, C345, C346, C347, C348, C349, C350, C351, C352, C353, C354, C355, C356, C357, C358, C359, C360, C361, C362, C363, C364, C365, C366, C367, C368, C369, C370, C371, C372, C373, C374, C375, C376, C377, C378, C379, C380, C381, C382, C383, C384, C385, C386, C387, C388, C389, C390, C391, C392, C393, C394, C395, C396, C397, C398, C399, C400, C401, C402, C403, C404, C405, C406, C407, C408, C409, C410, C411, C412, C413, C414, C415, C416, C417, C418, C419, C420, C421, C422, C423, C424, C425, C426, C427, C428, C429, C430, C431, C432, C433, C434, C435, C436, C437, C438, C439, C440, C441, C442, C443, C444, C445, C446, C447, C448, C449, C450, C451, C452, C453, C454, C455, C456, C457, C458, C459, C460, C461, C462, C463, C464, C465, C466, C467, C468, C469, C470, C471, C472, C473, C474, C475, C476, C477, C478, C479, C480, C481, C482, C483, C484, C485, C486, C487, C488, C489, C490, C491, C492, C493, C494, C495, C496, C497, C498, C499, C500, C501, C502, C503, C504, C505, C506, C507, C508, C509, C510, C511, C512, C513, C514, C515, C516, C517, C518, C519, C520, C521, C522, C523, C524, C525, C526, C527, C528, C529, C530, C531, C532, C533, C534, C535, C536, C537, C538, C539, C540, C541, C542, C543, C544, C545, C546, C547, C548, C549, C550, C551, C552, C553, C554, C555, C556, C557, C558, C559, C560, C561, C562, C563, C564, C565, C566, C567, C568, C569, C570, C571, C572, C573, C574, C575, C576, C577, C578, C579, C580, C581, C582, C583, C584, C585, C586, C587, C588, C589, C590, C591, C592, C593, C594, C595, C596, C597, C598, C599, C600, C601, C602, C603, C604, C605, C606, C607, C608, C609, C610, C611, C612, C613, C614, C615, C616, C617, C618, C619, C620, C621, C622, C623, C624, C625, C626, C627, C628, C629, C630, C631, C632, C633, C634, C635, C636, C637, C638, C639, C640, C641, C642, C643, C644, C645, C646, C647, C648, C649, C650, C651, C652, C653, C654, C655, C656, C657, C658, C659, C660, C661, C662, C663, C664, C665, C666, C667, C668, C669, C670, C671, C672, C673, C674, C675, C676, C677, C678, C679, C680, C681, C682, C683, C684, C685, C686, C687, C688, C689, C690, C691, C692, C693, C694, C695, C696, C697, C698, C699, C700, C701, C702, C703, C704, C705, C706, C707, C708, C709, C710, C711, C712, C713, C714, C715, C716, C717, C718, C719, C720, C721, C722, C723, C724, C725, C726, C727, C728, C729, C730, C731, C732, C733, C734, C735, C736, C737, C738, C739, C740, C741, C742, C743, C744, C745, C746, C747, C748, C749, C750, C751, C752, C753, C754, C755, C756, C757, C758, C759, C760, C761, C762, C763, C764, C765, C766, C767, C768, C769, C770, C771, C772, C773, C774, C775, C776, C777, C778, C779, C780, C781, C782, C783, C784, C785, C786, C787, C788, C789, C790, C791, C792, C793, C794, C795, C796, C797, C798, C799, C800, C801, C802, C803, C804, C805, C806, C807, C808, C809, C810, C811, C812, C813, C814, C815, C816, C817, C818, C819, C820, C821, C822, C823, C824, C825, C826, C827, C828, C829, C830, C831, C832, C833, C834, C835, C836, C837, C838, C839, C840, C841, C842, C843, C844, C845, C846, C847, C848, C849, C850, C851, C852, C853, C854, C855, C856, C857, C858, C859, C860, C861, C862, C863, C864, C865, C866, C867, C868, C869, C870, C871, C872, C873, C874, C875, C876, C877, C878, C879, C880, C881, C882, C883, C884, C885, C886, C887, C888, C889, C890, C891, C892, C893, C894, C895, C896, C897, C898, C899, C900, C901, C902, C903, C904, C905, C906, C907, C908, C909, C910, C911, C912, C913, C914, C915, C916, C917, C918, C919, C920, C921, C922, C923, C924, C925, C926, C927, C928, C929, C930, C931, C932, C933, C934, C935, C936, C937, C938, C939, C940, C941, C942, C943, C944, C945, C946, C947, C948, C949, C950, C951, C952, C953, C954, C955, C956, C957, C958, C959, C960, C961, C962, C963, C964, C965, C966, C967, C968, C969, C970, C971, C972, C973, C974, C975, C976, C977, C978, C979, C980, C981, C982, C983, C984, C985, C986, C987, C988, C989, C990, C991, C992, C993, C994, C995, C996, C997, C998, C999, C1000 | CAP0201 | Cap0201 | 1000 |
| 25BAP 0805 | 25BAP 6V 0805X5R | C1, C2, C3, C4, C5, C6, C7, C8, C9, C10, C11, C12, C13, C14, C15, C16, C17, C18, C19, C20, C21, C22, C23, C24, C25, C26, C27, C28, C29, C30, C31, C32, C33, C34, C35, C36, C37, C38, C39, C40, C41, C42, C43, C44, C45, C46, C47, C48, C49, C50, C51, C52, C53, C54, C55, C56, C57, C58, C59, C60, C61, C62, C63, C64, C65, C66, C67, C68, C69, C70, C71, C72, C73, C74, C75, C76, C77, C78, C79, C80, C81, C82, C83, C84, C85, C86, C87, C88, C89, C90, C91, C92, C93, C94, C95, C96, C97, C98, C99, C100, C101, C102, C103, C104, C105, C106, C107, C108, C109, C110, C111, C112, C113, C114, C115, C116, C117, C118, C119, C120, C121, C122, C123, C124, C125, C126, C127, C128, C129, C130, C131, C132, C133, C134, C135, C136, C137, C138, C139, C140, C141, C142, C143, C144, C145, C146, C147, C148, C149, C150, C151, C152, C153, C154, C155, C156, C157, C158, C159, C160, C161, C162, C163, C164, C165, C166, C167, C168, C169, C170, C171, C172, C173, C174, C175, C176, C177, C178, C179, C180, C181, C182, C183, C184, C185, C186, C187, C188, C189, C190, C191, C192, C193, C194, C195, C196, C197, C198, C199, C200, C201, C202, C203, C204, C205, C206, C207, C208, C209, C210, C211, C212, C213, C214, C215, C216, C217, C218, C219, C220, C221, C222, C223, C224, C225, C226, C227, C228, C229, C230, C231, C232, C233, C234, C235, C236, C237, C238, C239, C240, C241, C242, C243, C244, C245, C246, C247, C248, C249, C250, C251, C252, C253, C254, C255, C256, C257, C258, C259, C260, C261, C262, C263, C264, C265, C266, C267, C268, C269, C270, C271, C272, C273, C274, C275, C276, C277, C278, C279