Title			
Size A4	Number		Revision
Date:	11/06/2022	Sheet of	
File:	C:\embedded_media\..\01 - Title Page.SchDoc	Drawn By:	

Title			
Size A4	Number		Revision
Date:	11/06/2022	Sheet of	
File:	C:\embedded_media\..\02 - Block Diagram.SchDoc	Drawn By:	

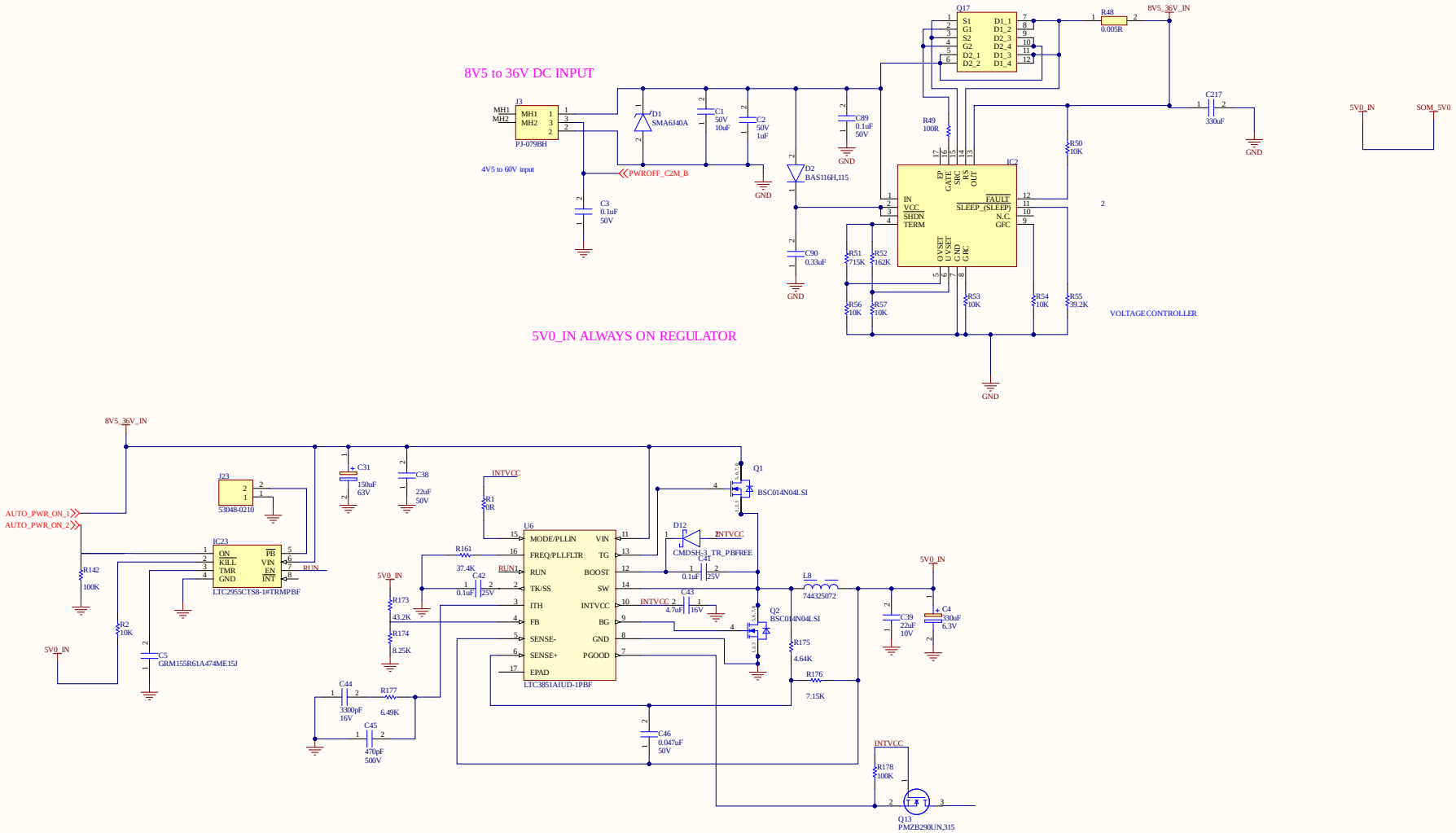

Title		
Size C	Number	Revision
Date: 11/06/2022	Sheet of	
File: C:\embedded_media\...\03 - Always On Pwr.SchDoc	Drawn By:	

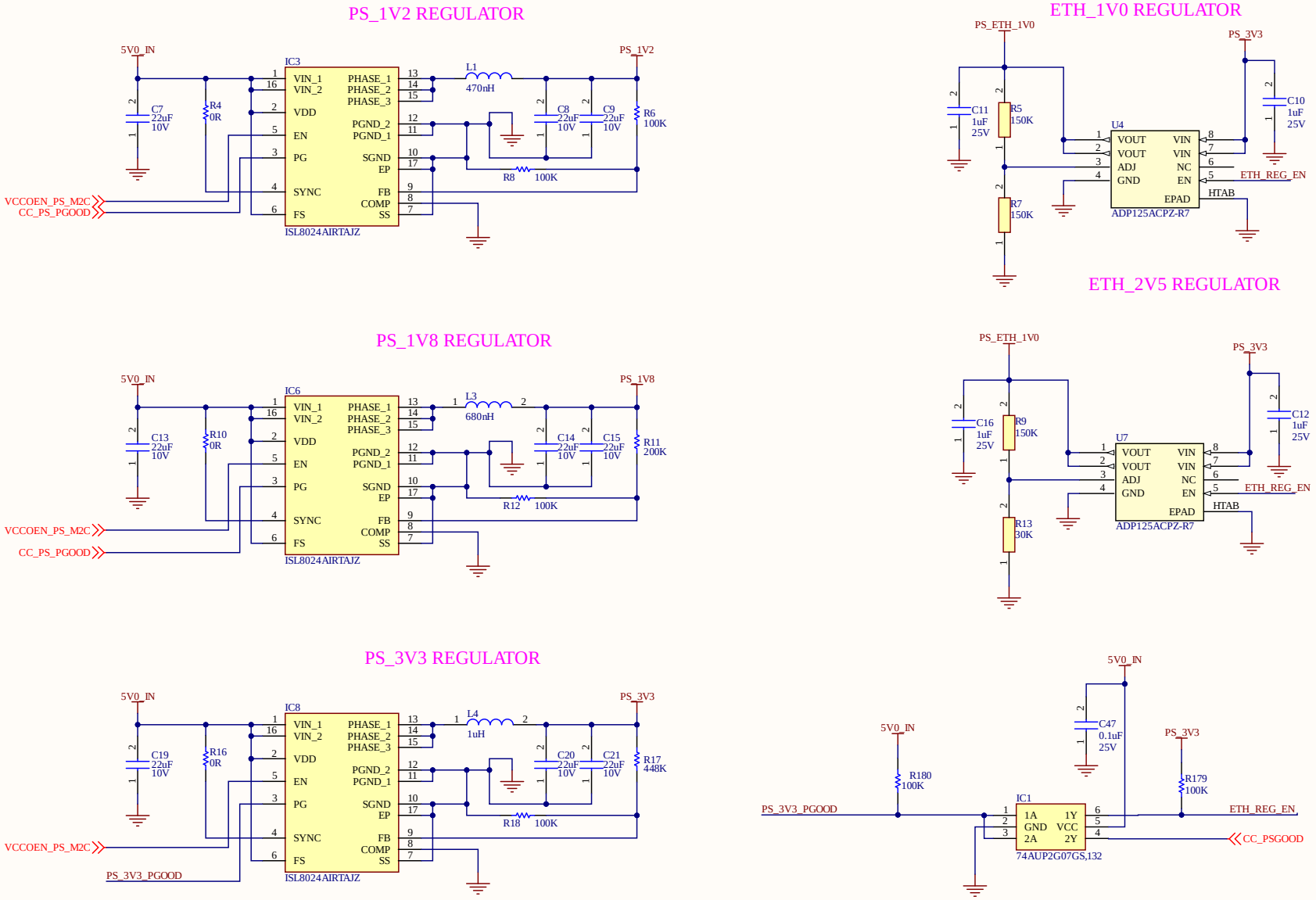

Title		
Size B	Number	Revision
Date: 11/06/2022	Sheet of	
File: C:\embedded_media\..\04 - PS Power.SchDoc	Drawn By:	

PL_1V2 REGULATOR

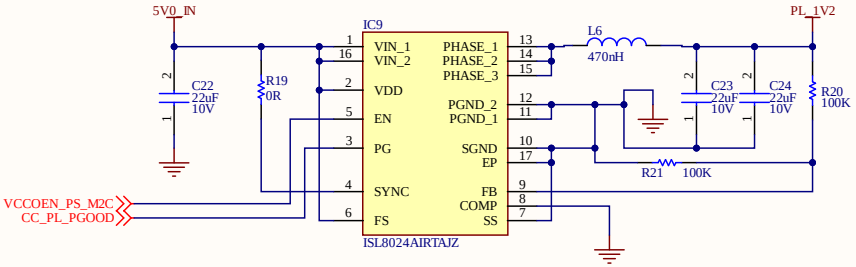

PL_1V8 REGULATOR

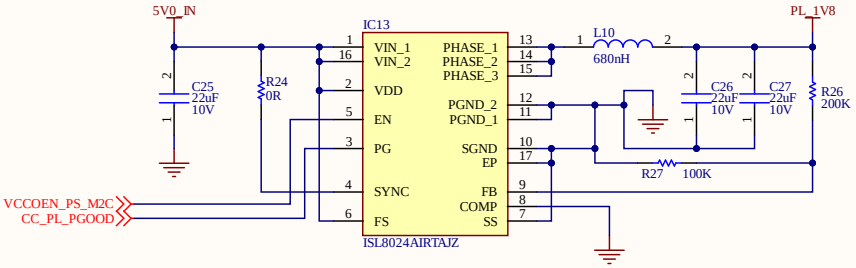

P_3V3 REGULATOR

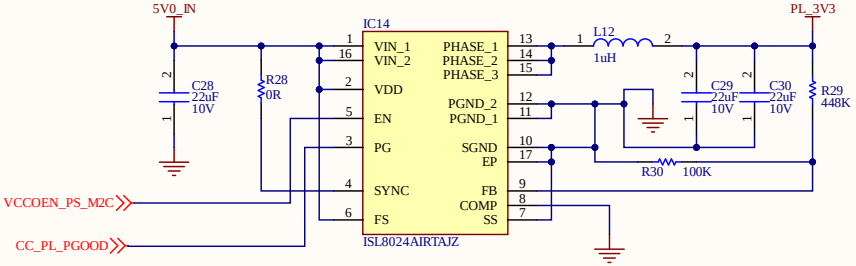

ETH_1V0 REGULATOR

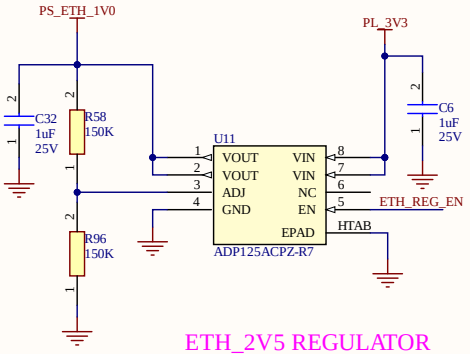

ETH_2V5 REGULATOR

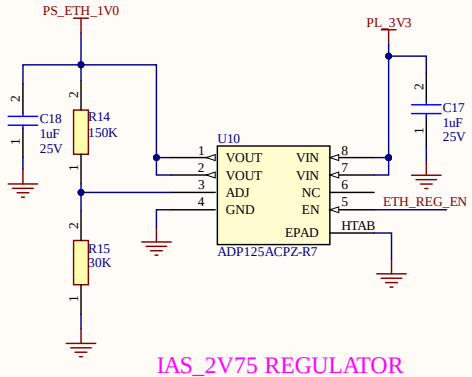

IAS_2V75 REGULATOR

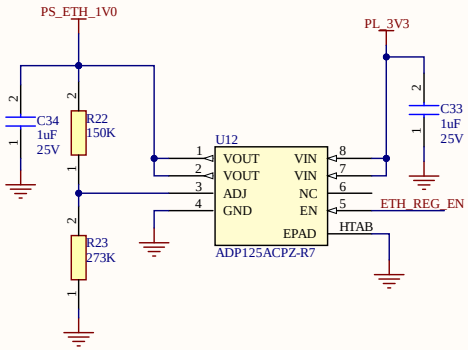

Title		
Size B	Number	Revision
Date: 11/06/2022	Sheet of	
File: C:\embedded_media\..\05 - PL Power.SchDoc	Drawn By:	

SOM240_2

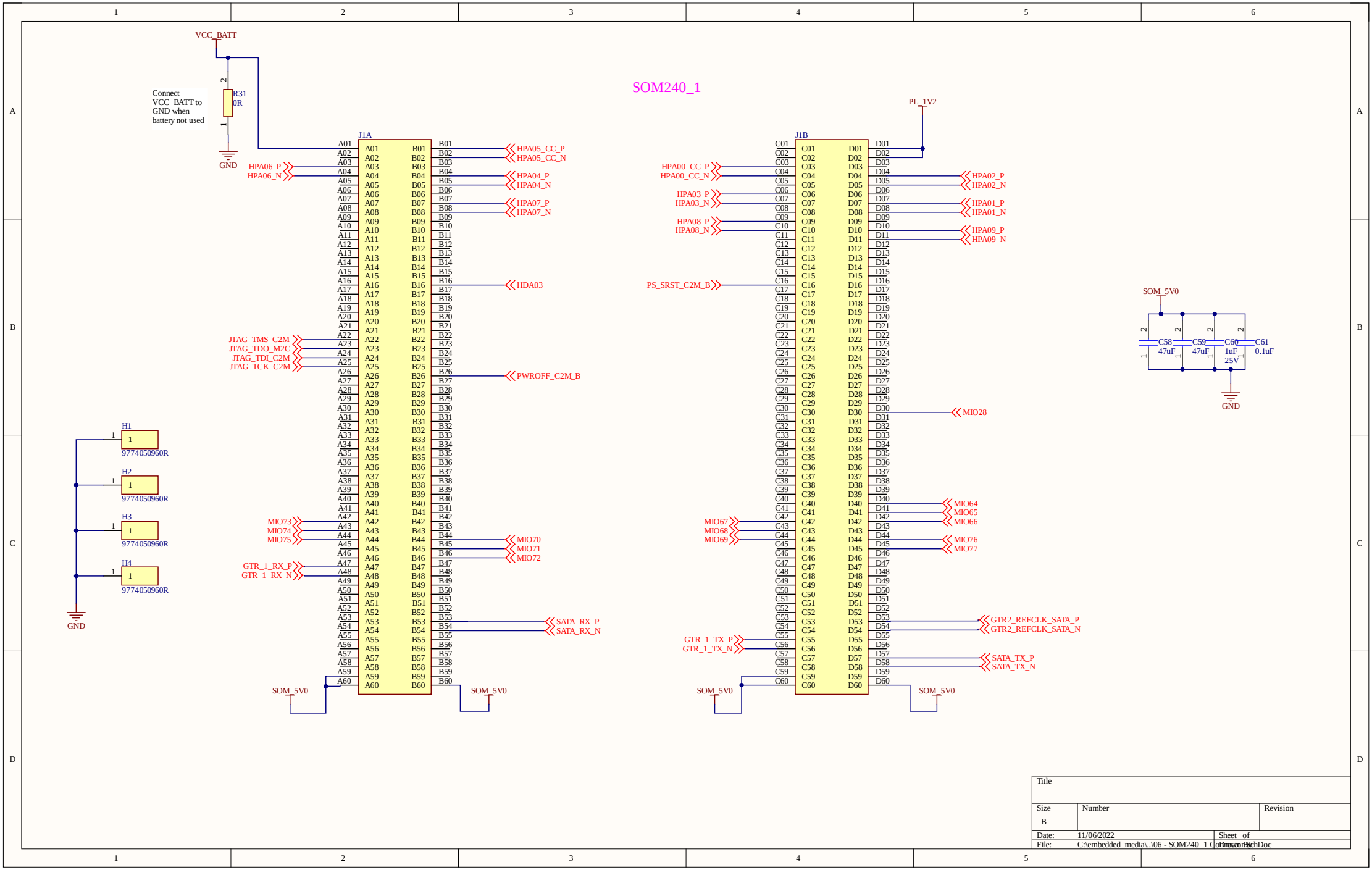
SOM240_1
VCC_BATT
Connect VCC_BATT to GND when battery not used
R31
0R
GND
J1A
J1B
PL_1V2
SOM_5V0
C58
47uF
C59
47uF
C60
1uF
25V
C61
0.1uF
H1
H2
H3
H4
9774050960R
HPA05_CC_P
HPA05_CC_N
HPA06_P
HPA06_N
HPA04_P
HPA04_N
HPA07_P
HPA07_N
HDA03
JTAG_TMS_C2M
JTAG_TDO_M2C
JTAG_TDI_C2M
JTAG_TCK_C2M
PWROFF_C2M_B
MIO73
MIO74
MIO75
MIO70
MIO71
MIO72
GTR_1_RX_P
GTR_1_RX_N
SATA_RX_P
SATA_RX_N
HPA00_CC_P
HPA00_CC_N
HPA03_P
HPA03_N
HPA08_P
HPA08_N
HPA02_P
HPA02_N
HPA01_P
HPA01_N
HPA09_P
HPA09_N
PS_SRST_C2M_B
MIO28
MIO64
MIO65
MIO66
MIO67
MIO68
MIO69
MIO76
MIO77
GTR2_REFCLK_SATA_P
GTR2_REFCLK_SATA_N
GTR_1_TX_P
GTR_1_TX_N
SATA_TX_P
SATA_TX_N
Title
Size
B
Number
Revision
Date: 11/06/2022
Sheet of
File: C:\embedded_media\..\06 - SOM240_1 Connectors.SchDoc
Drawn By:

SOM240_2

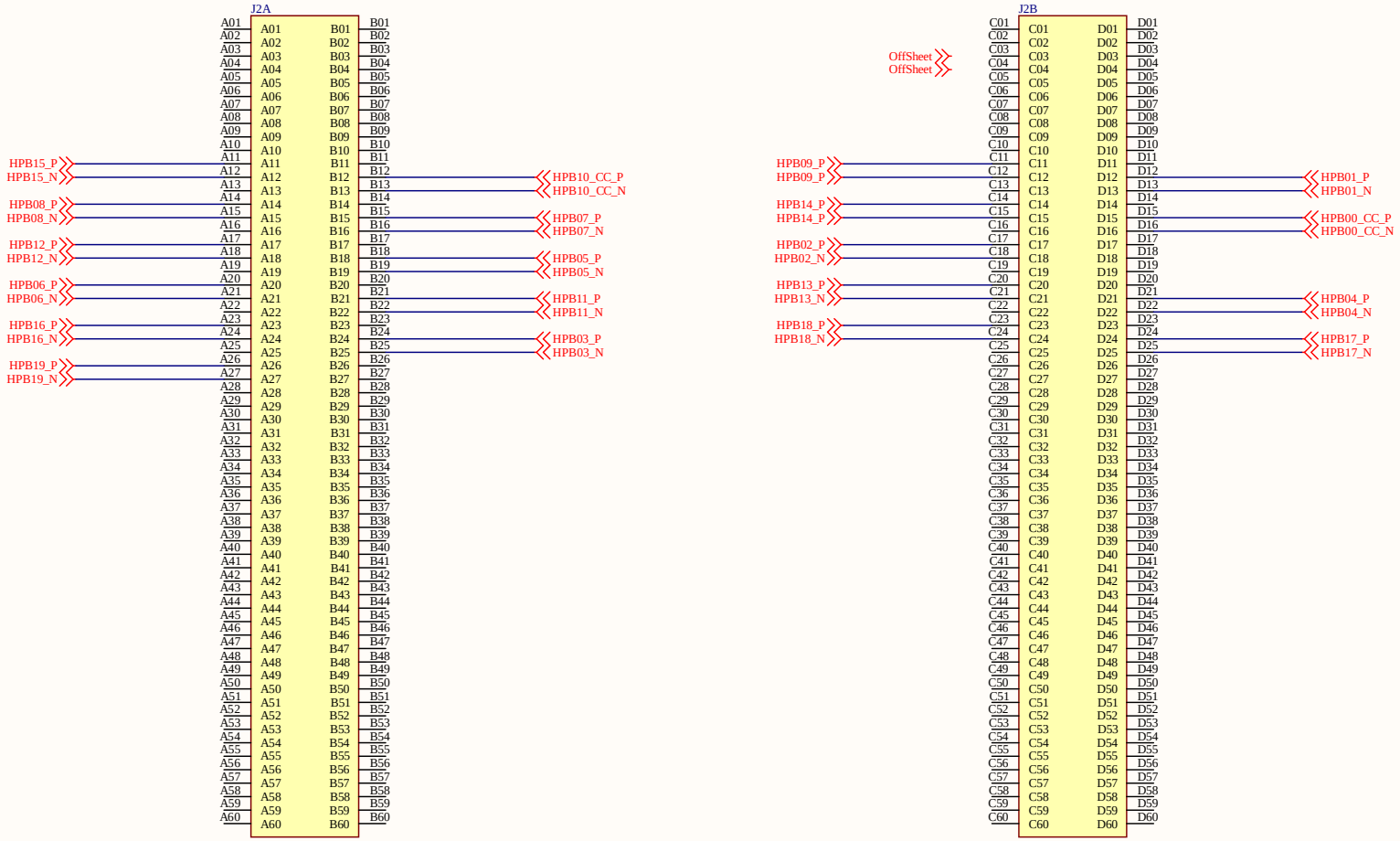

Title		
Size B	Number	Revision
Date: 11/06/2022	Sheet of	
File: C:\embedded_media\..\07 - SOM240_2 Connector.SchDoc	Drawn By:	

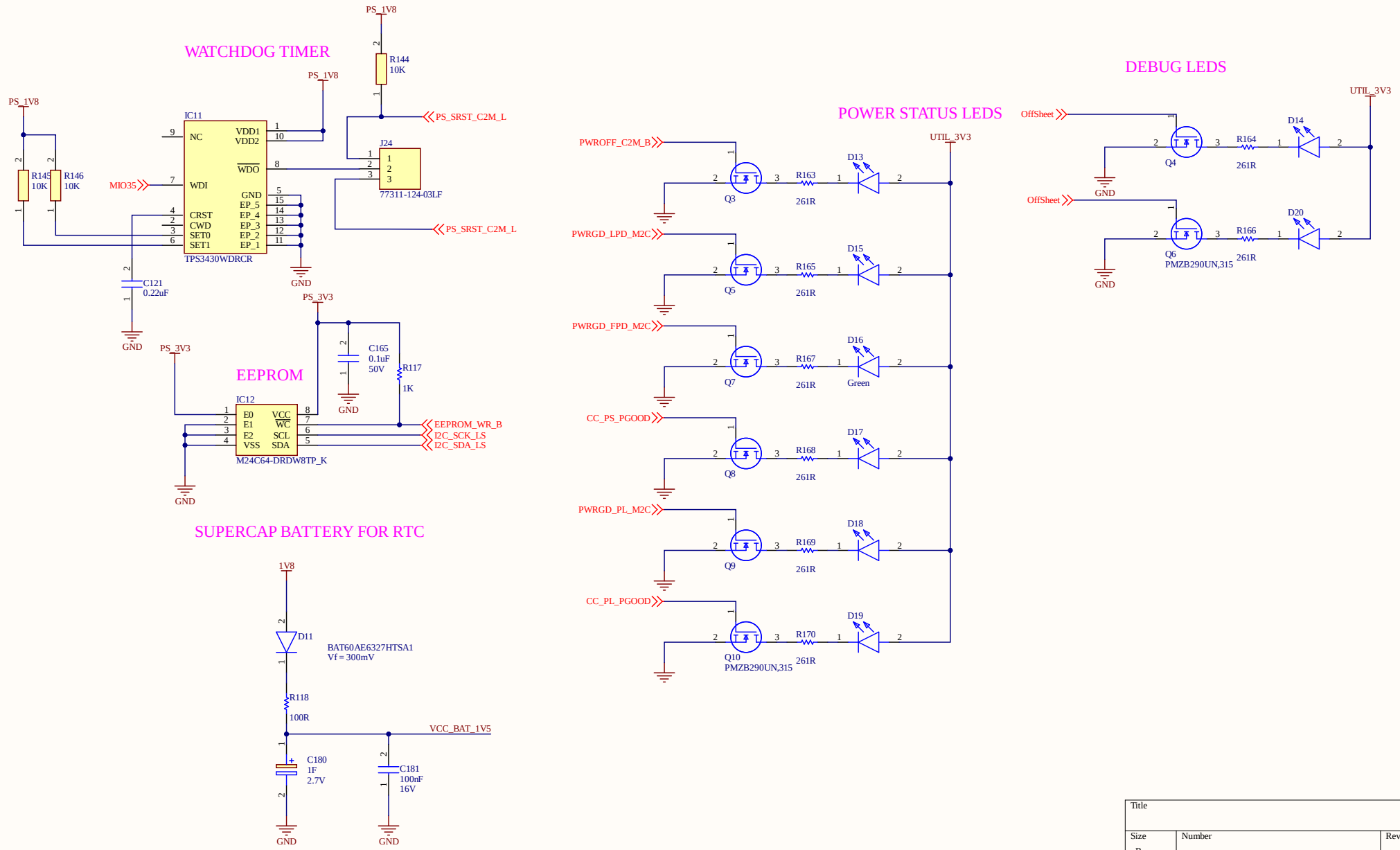

Title		
Size B	Number	Revision
Date: 11/06/2022	Sheet of	
File: C:\embedded_media\..\08 - EEPROM, RTC, WD, LEDs.SchDoc	Drawn By:	

100MHz CLOCK GENERATOR

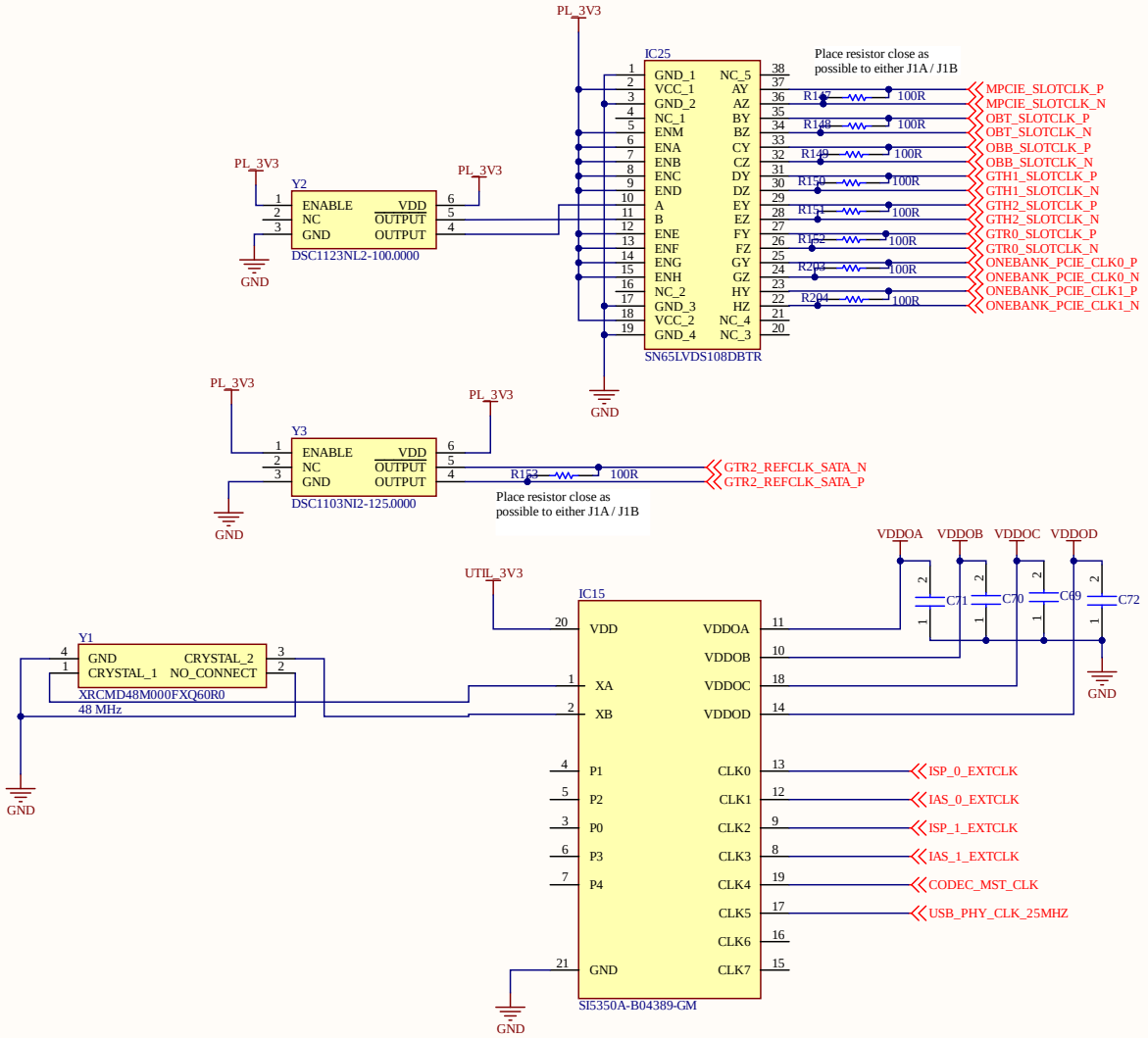

Title		
Size B	Number	Revision
Date: 11/06/2022	Sheet of	
File: C:\embedded_media\..\09 - Clock gen.SchDoc	Drawn By:	

FTDI JTAG/UART

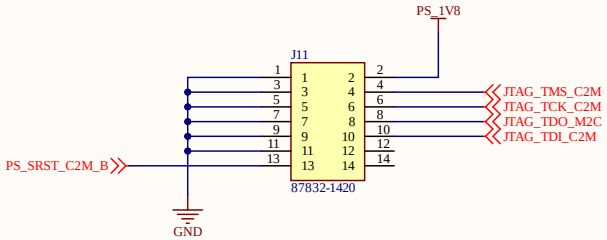

Title		
Size B	Number	Revision
Date: 11/06/2022	Sheet of	
File: C:\embedded_media\..\10 - JTAG UART.SchDoc	Drawn By:	

Display Port

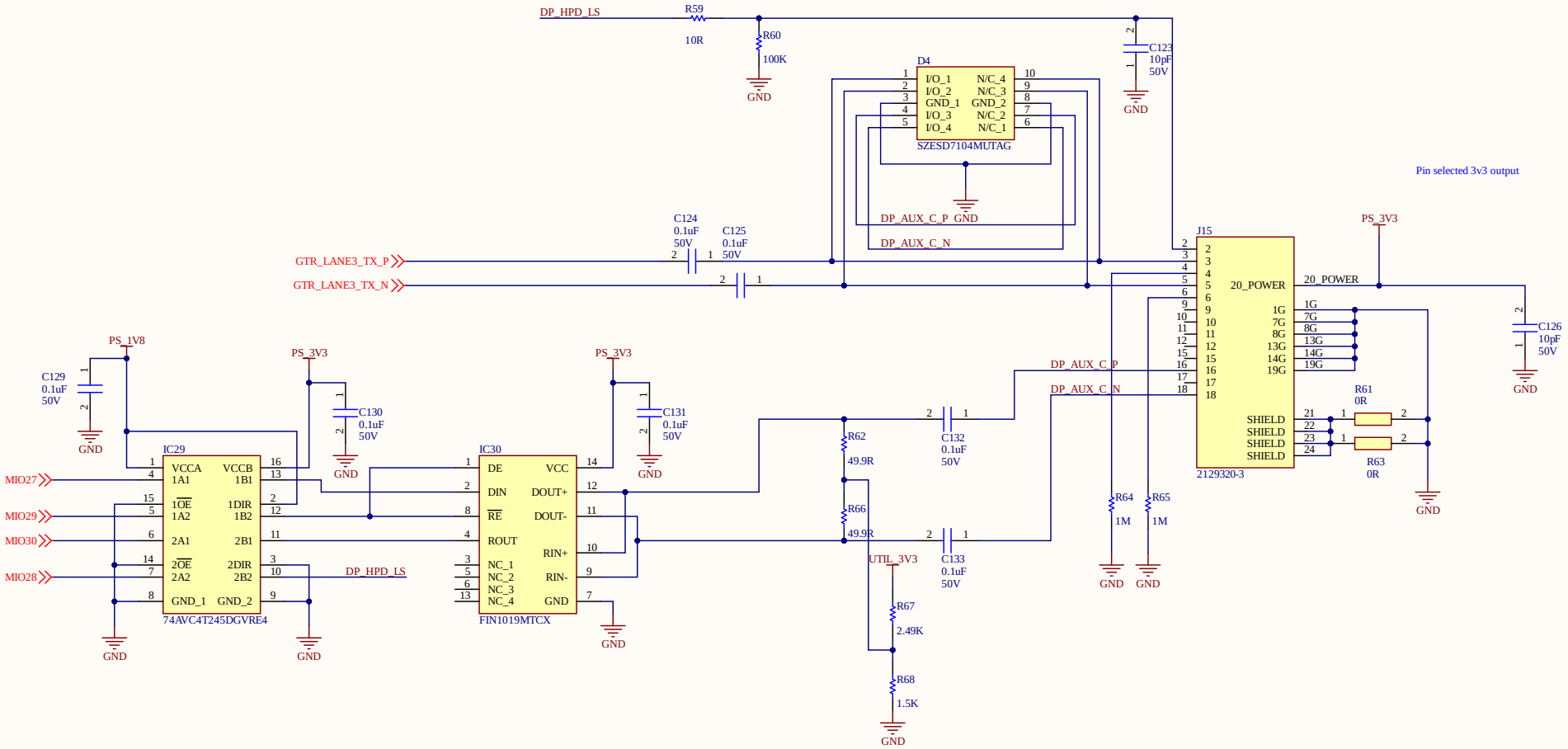

Title		
Size B	Number	Revision
Date: 11/06/2022	Sheet of	
File: C:\embedded_media\..\11 - Display Port.SchDoc	Drawn By:	

Camera MIPI connectors

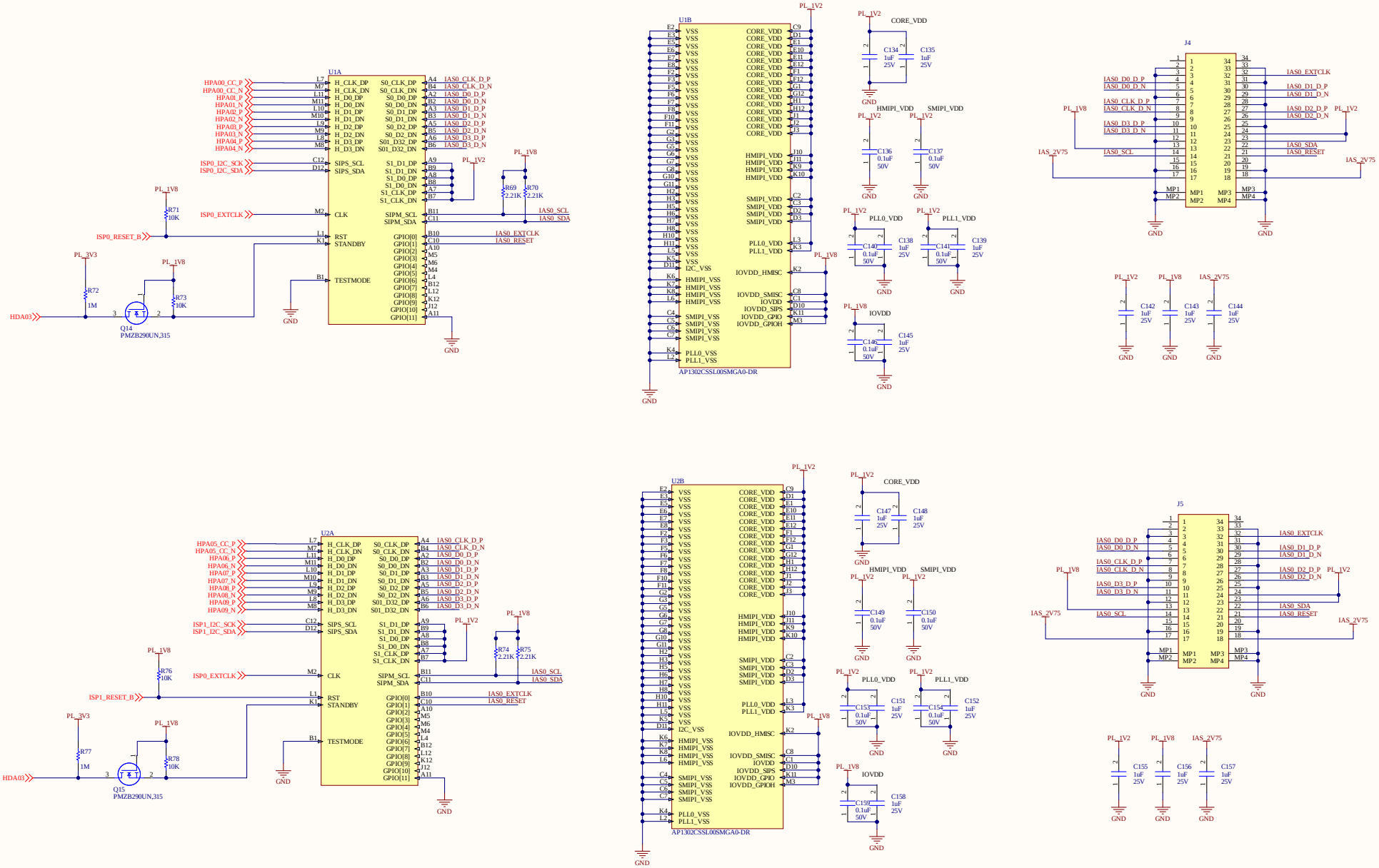

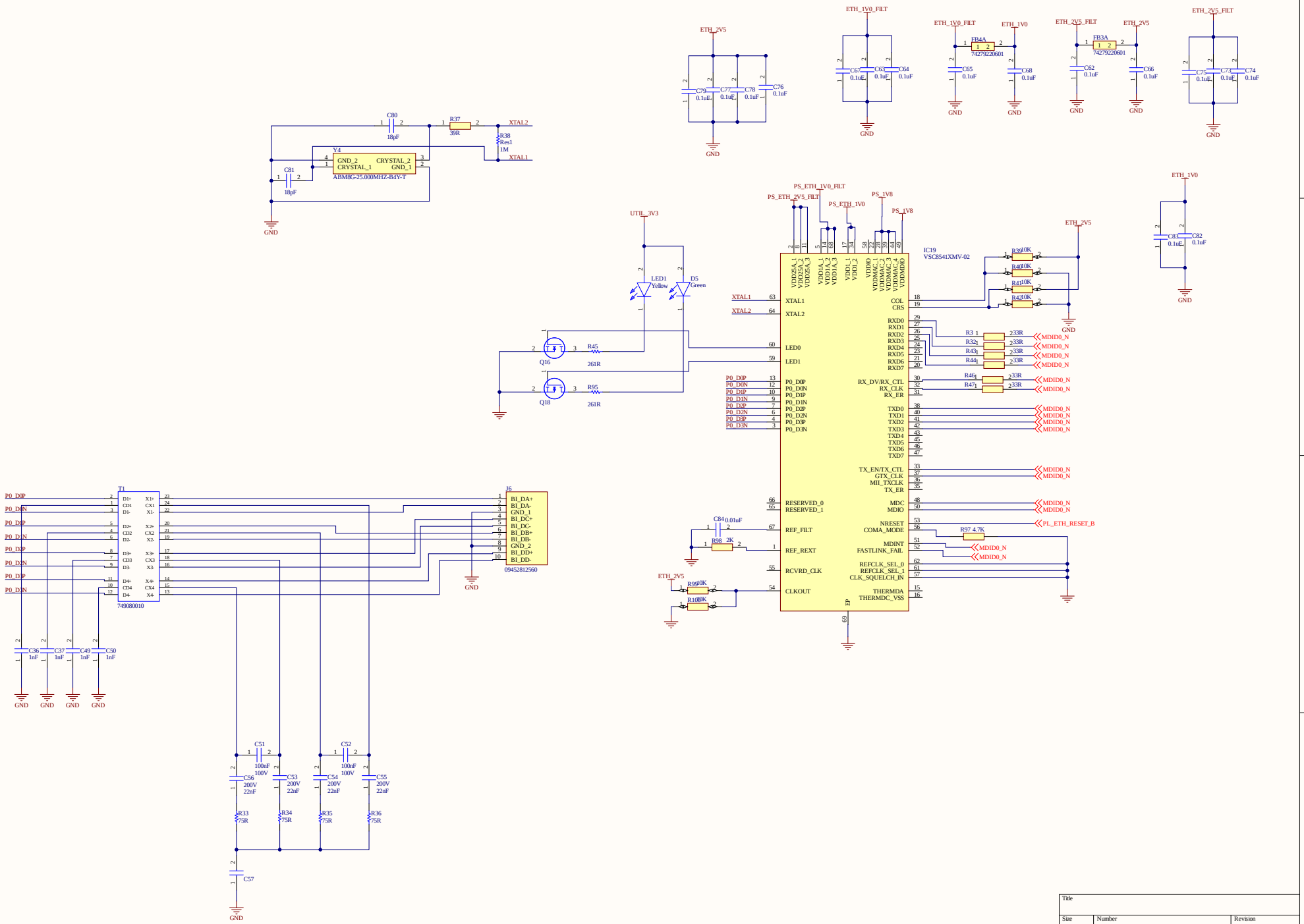

Title		
Size C	Number	Revision
Date: 11/06/2022	Sheet of	
File: C:\embedded_media\..\13 - PL Ethernet.SchDoc	Drawn By:	

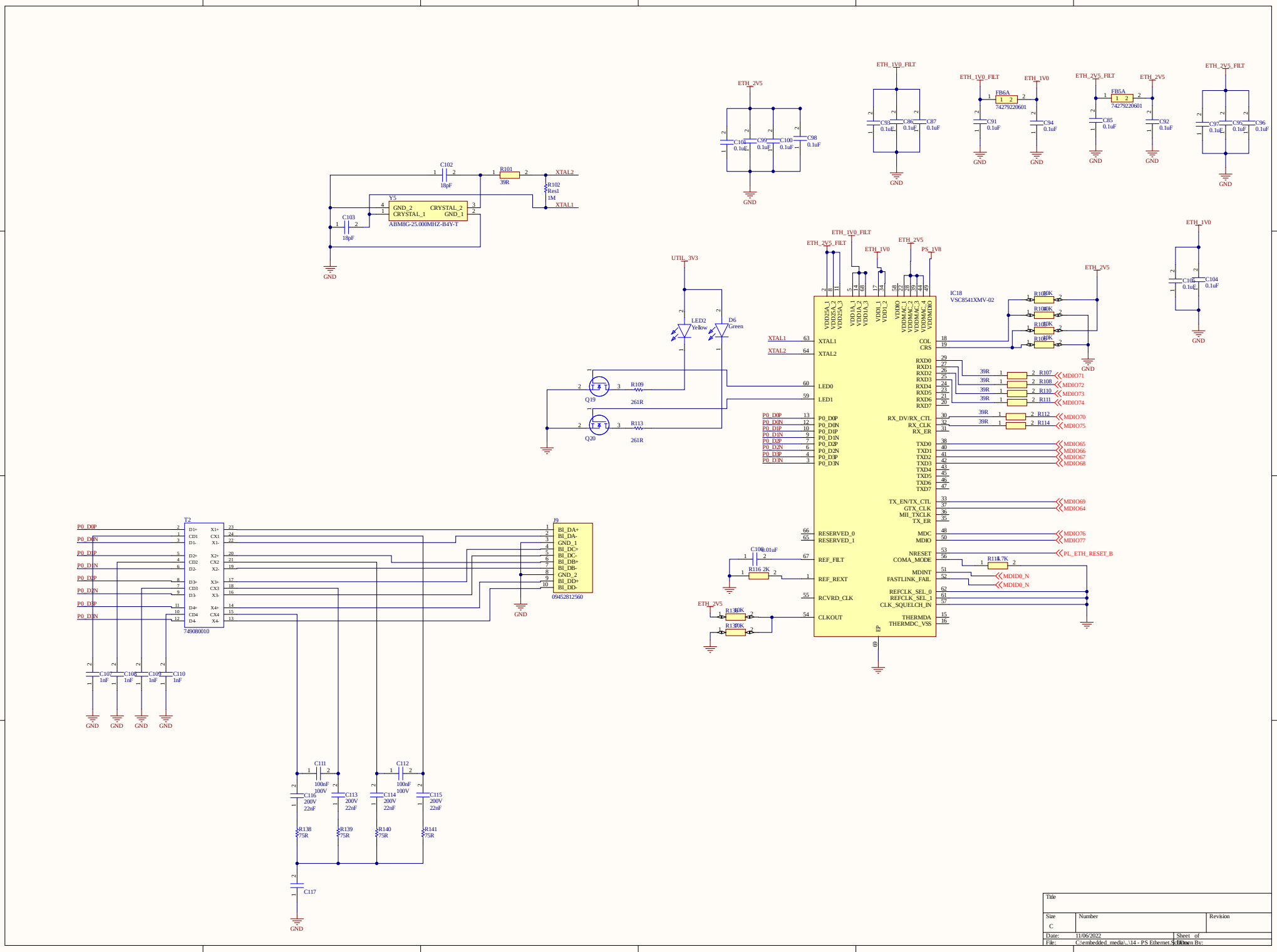
ETH_1V0_FILT
ETH_2V5
ETH_1V0
ETH_2V5_FILT
FB6A
7427922060l
C91 0.1uF
C94 0.1uF
C85 0.1uF
C92 0.1uF
C97 0.1uF
C95 0.1uF
C96 0.1uF
C93 0.1uF
C86 0.1uF
C87 0.1uF
C101 0.1uF
C99 0.1uF
C100 0.1uF
C98 0.1uF
C104 0.1uF
C106 0.1uF
GND
C102 18pF
R101 39R
R102 Res1 1M
XTAL2
XTAL1
Y5
GND_2
CRYSTAL_2
CRYSTAL_1
GND_1
ABM8G-25.000MHZ-B4Y-T
C103 18pF
UTIL_3V3
LED2 Yellow
D6 Green
Q19
Q20
R109 261R
R113 261R
PS_1V8
IC18
VSC8541XMV-02
VDD25A_1
VDD25A_2
VDD25A_3
VDD1A_1
VDD1A_2
VDD1A_3
VDD1_1
VDD1_2
VDDIO
VDDMAC_1
VDDMAC_2
VDDMAC_3
VDDMAC_4
VDDMDIO
XTAL1
XTAL2
LED0
LED1
P0_D0P
P0_D0N
P0_D1P
P0_D1N
P0_D2P
P0_D2N
P0_D3P
P0_D3N
RESERVED_0
RESERVED_1
REF_FILT
REF_REXT
RCVRD_CLK
CLKOUT
COL
CRS
RXD0
RXD1
RXD2
RXD3
RXD4
RXD5
RXD6
RXD7
RX_DV/RX_CTL
RX_CLK
RX_ER
TXD0
TXD1
TXD2
TXD3
TXD4
TXD5
TXD6
TXD7
TX_EN/TX_CTL
GTX_CLK
MII_TXCLK
TX_ER
MDC
MDIO
NRESET
COMA_MODE
MDINT
FASTLINK_FAIL
REFCLK_SEL_0
REFCLK_SEL_1
CLK_SQUELCH_IN
THERMDA
THERMDC_VSS
EP
R107 39R
R108 39R
R110 39R
R111 39R
R112 39R
R114 39R
MDIO71
MDIO72
MDIO73
MDIO74
MDIO70
MDIO75
MDIO65
MDIO66
MDIO67
MDIO68
MDIO69
MDIO64
MDIO76
MDIO77
PL_ETH_RESET_B
MDID0_N
MDID0_N
C108 0.01uF
R116 2K
R117 4.7K
R130 10K
R131 10K
T2
749080010
J9
BI_DA+
BI_DA-
GND_1
BI_DC+
BI_DC-
BI_DB+
BI_DB-
GND_2
BI_DD+
BI_DD-
09452812560
C107 1nF
C108 1nF
C109 1nF
C110 1nF
C111 100nF 100V
C112 100nF 100V
C113 200V 22nF
C114 200V 22nF
C115 200V 22nF
C116 200V 22nF
R138 75R
R139 75R
R140 75R
R141 75R
C117
Title
Size
C
Number
Revision
Date: 11/06/2022
Sheet of
File: C:\embedded_media\...\14 - PS Ethernet.SchDoc
Drawn By:

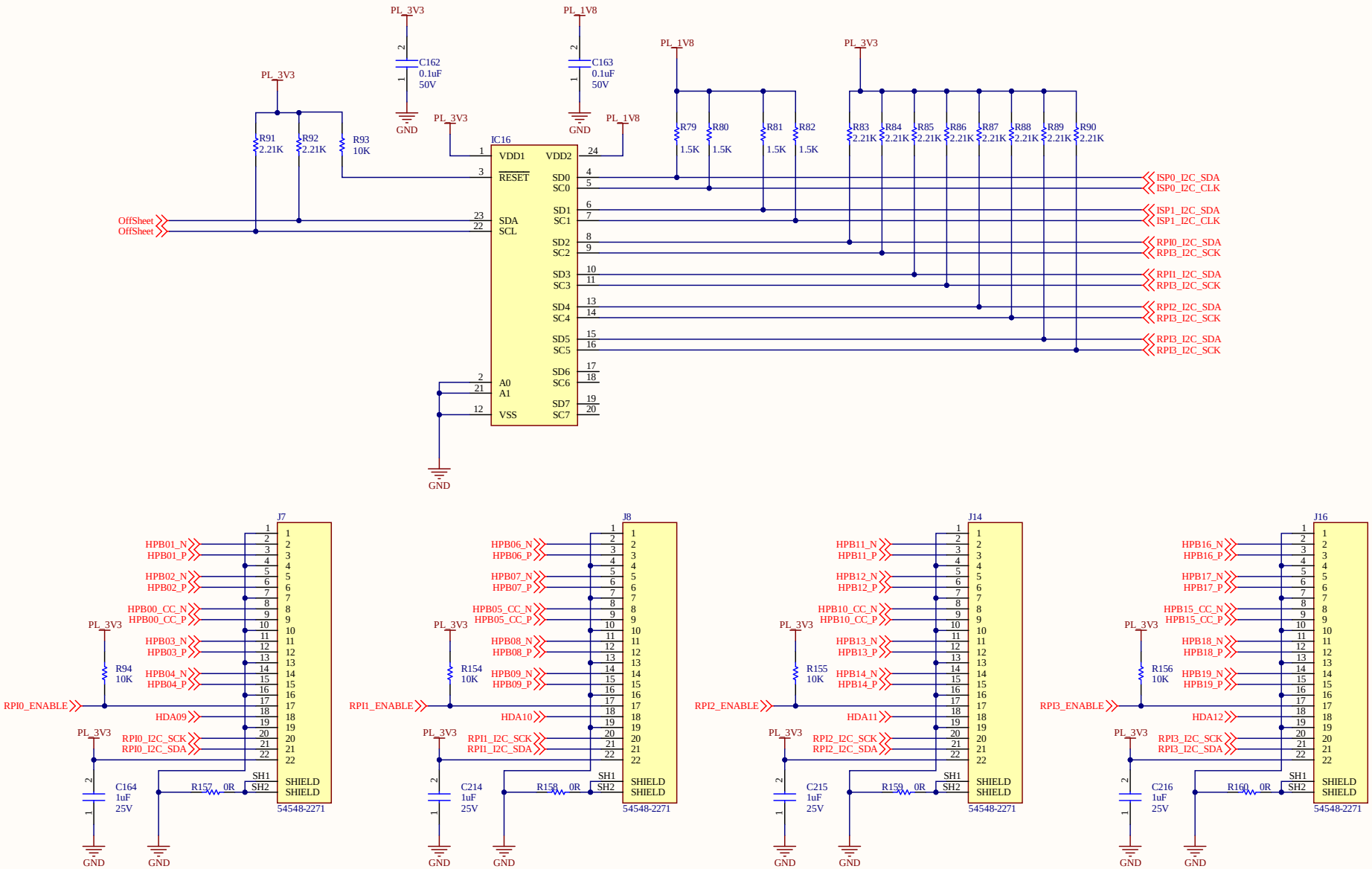

Title		
Size B	Number	Revision
Date: 11/06/2022		Sheet of
File: C:\embedded_media\..\16 - RPi Camera Connector.SchDoc		Drawn By:

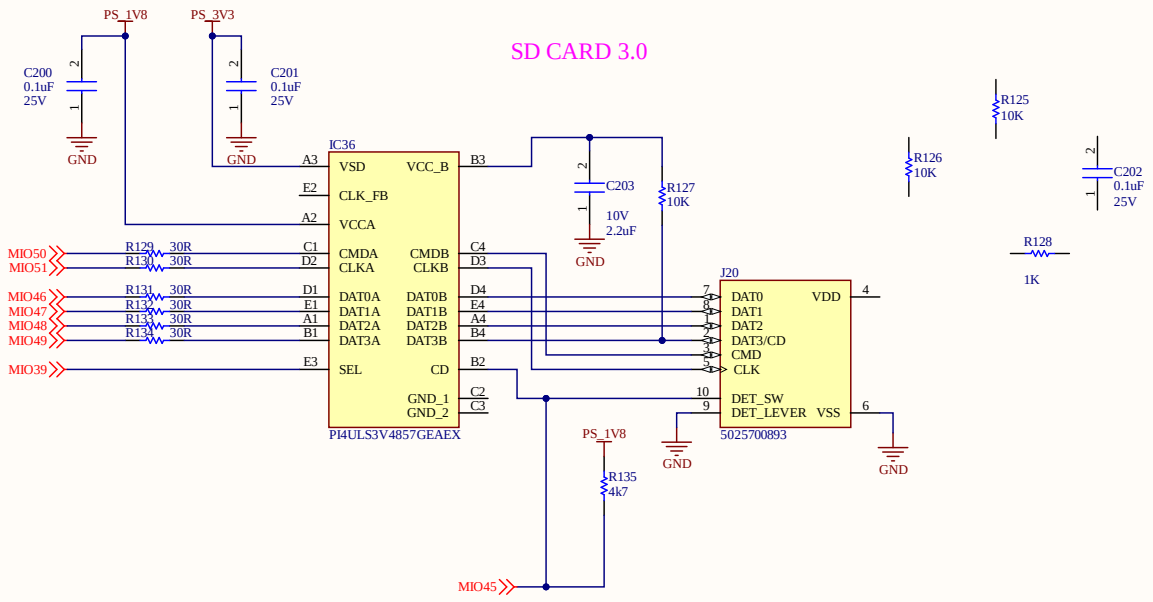

Title		
Size B	Number	Revision
Date: 11/06/2022	Sheet of	
File: C:\embedded_media\..\16 - SD Card, PMOD.SchDoc	Drawn By:	

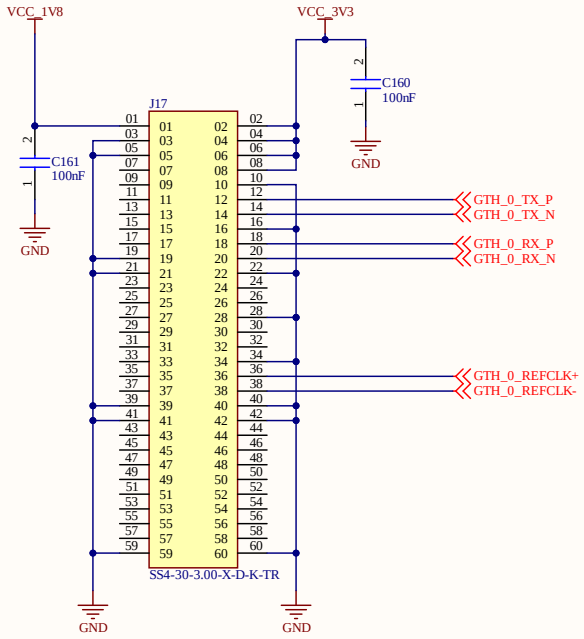

Title		
Size B	Number	Revision
Date: 11/06/2022	Sheet of	
File: C:\embedded_media\..\17 - Samtec 30 pin .SchDoc	Drawn By:	

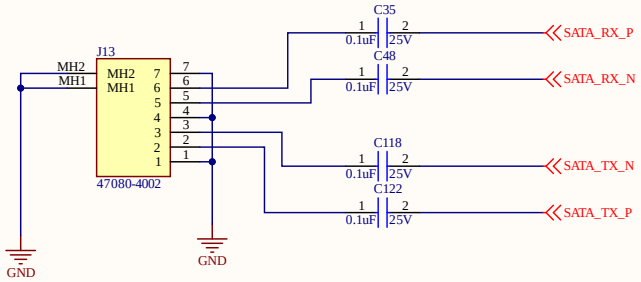

Title		
Size B	Number	Revision
Date: 11/06/2022	Sheet of	
File: C:\embedded_media\..\18 - SATA Connector.SchDoc	Drawn By:	

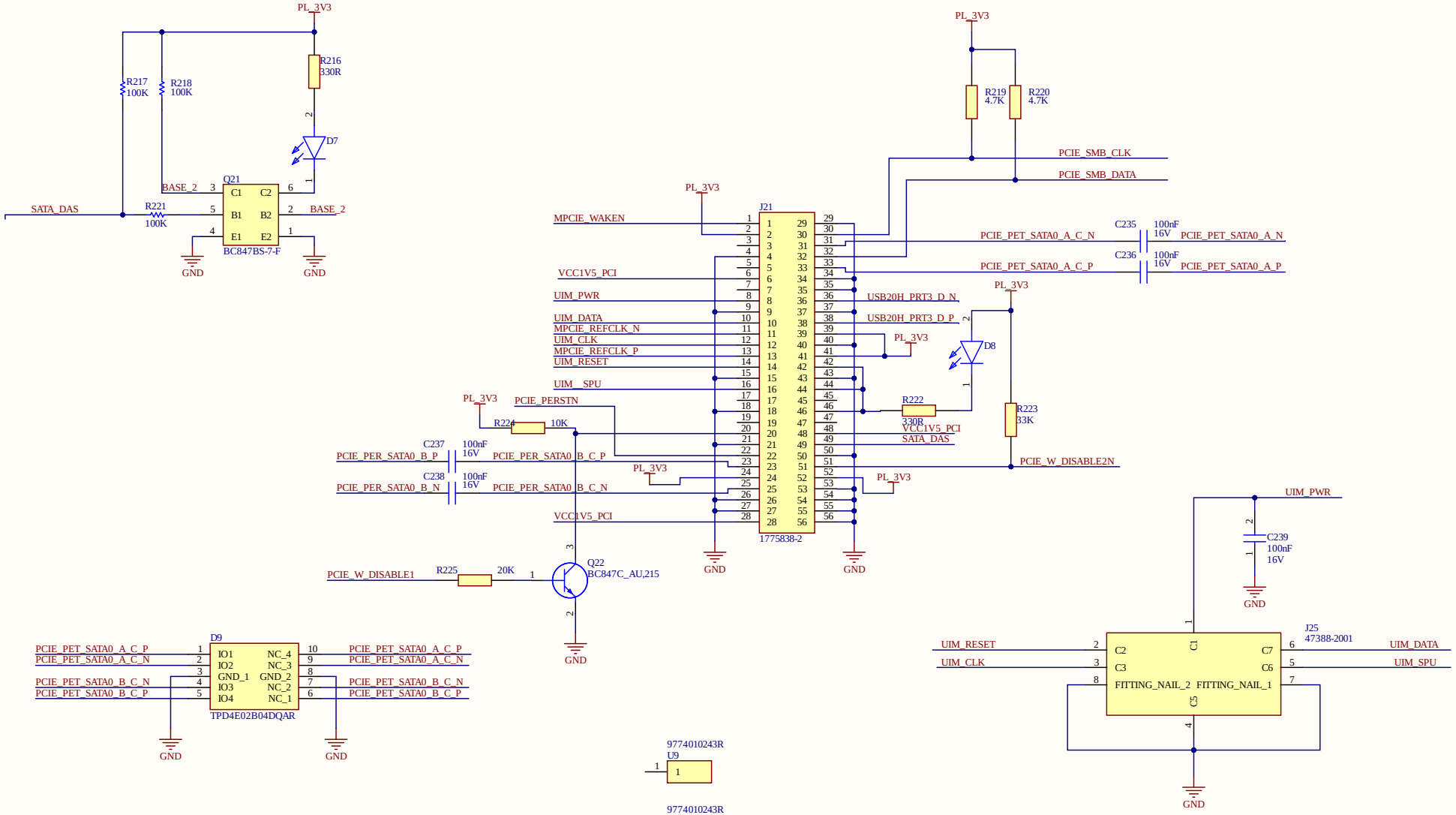

Title		
Size B	Number	Revision
Date: 11/06/2022	Sheet of	
File: C:\embedded_media\..\19 - mPCIe.SchDoc	Drawn By:	

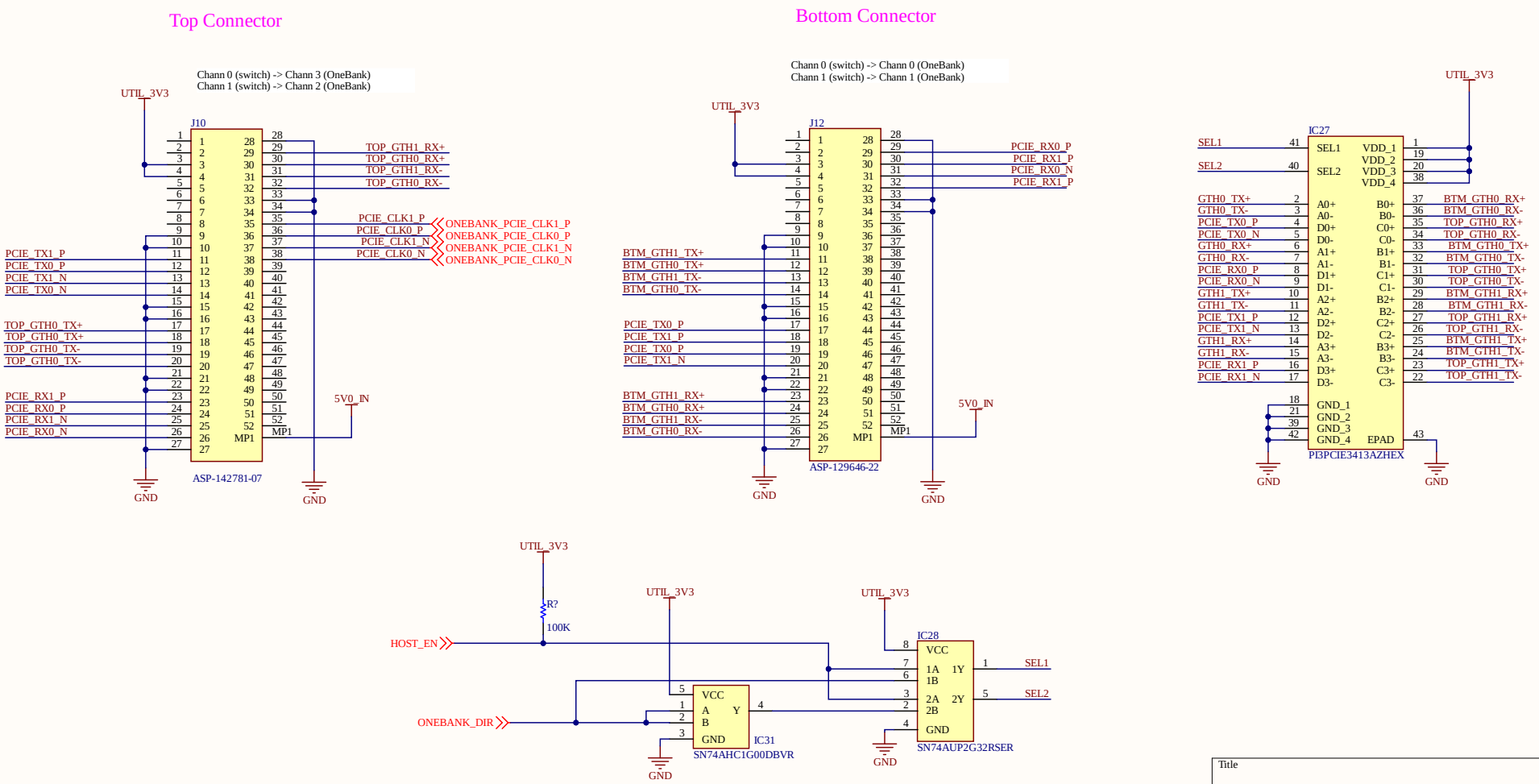

Title		
Size B	Number	Revision
Date: 11/06/2022	Sheet of	
File: C:\embedded_media\..\20 - OneBank Connectors.SchDoc	Drawn by:	

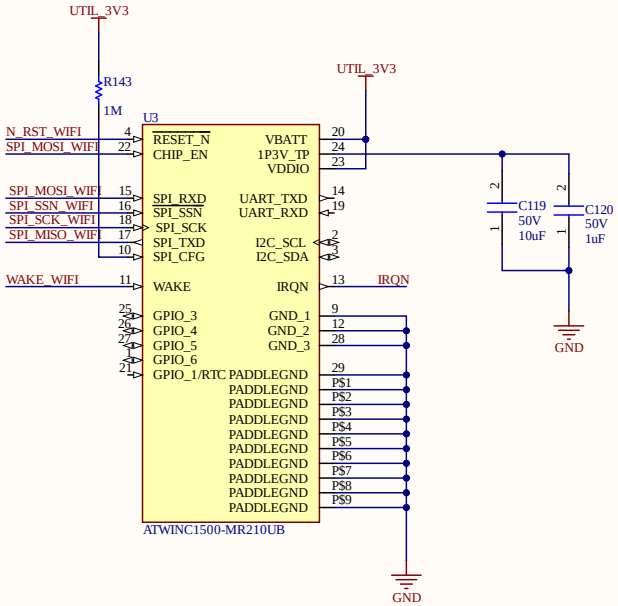

Title		
Size B	Number	Revision
Date: 11/06/2022		Sheet of
File: C:\embedded_media\..\21 - WiFi.SchDoc		Drawn By:

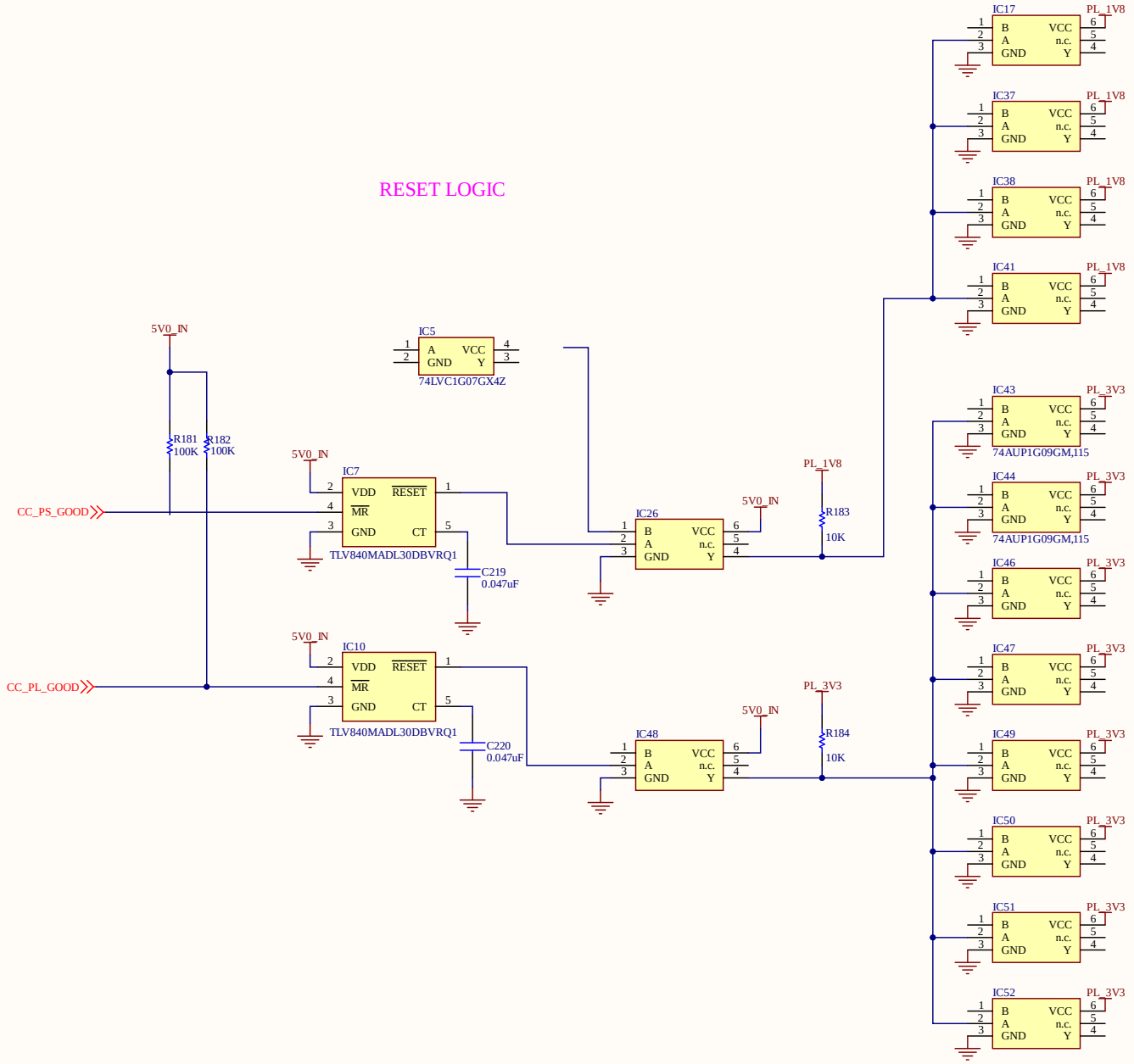

Title		
Size B	Number	Revision
Date: 11/06/2022	Sheet of	
File: C:\embedded_media\..\22 - Reset Logic.SchDoc	Drawn By:	

12V FAN HEADER

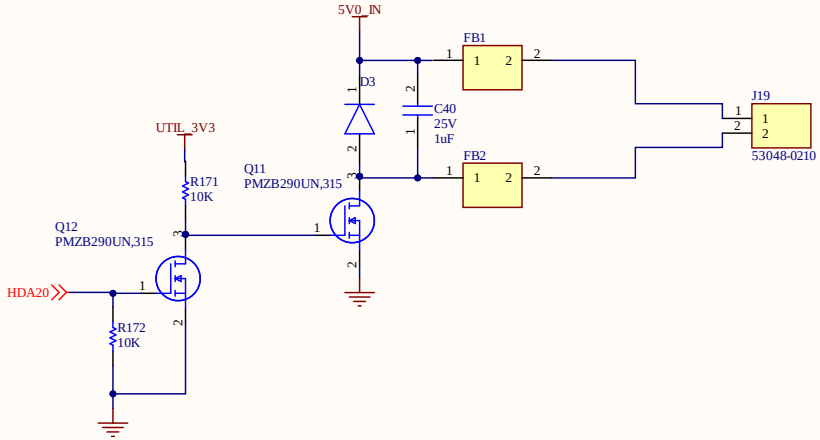

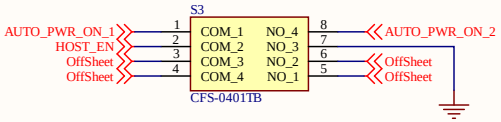

Title		
Size B	Number	Revision
Date: 11/06/2022	Sheet of	
File: C:\embedded_media\..\23 - Fan & Switches.SchDoc	Drawn By:	

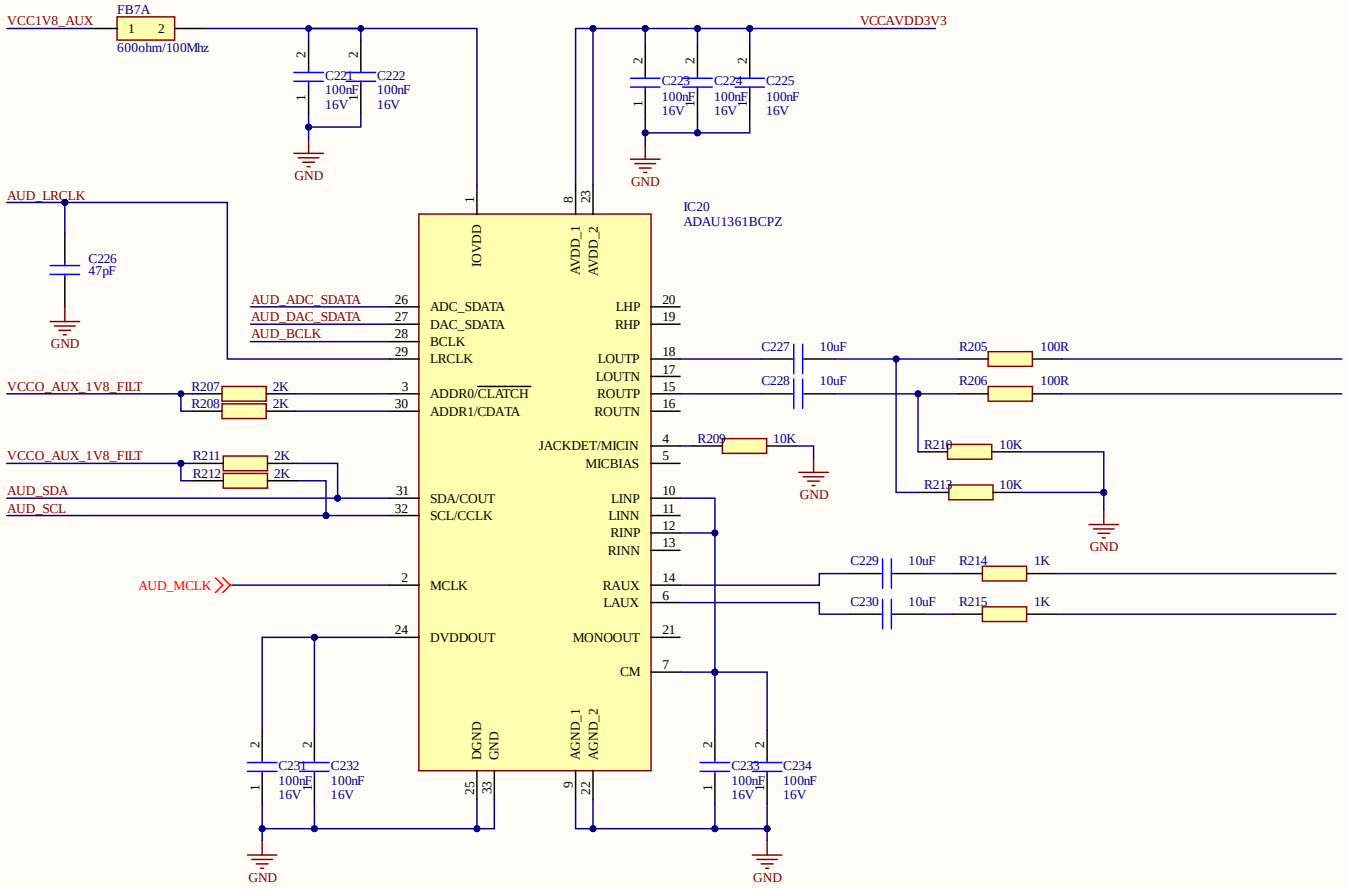

Title		
Size B	Number	Revision
Date: 11/06/2022	Sheet of	
File: C:\embedded_media\..\24 - Audio CODEC.SchDoc	Drawn By:	

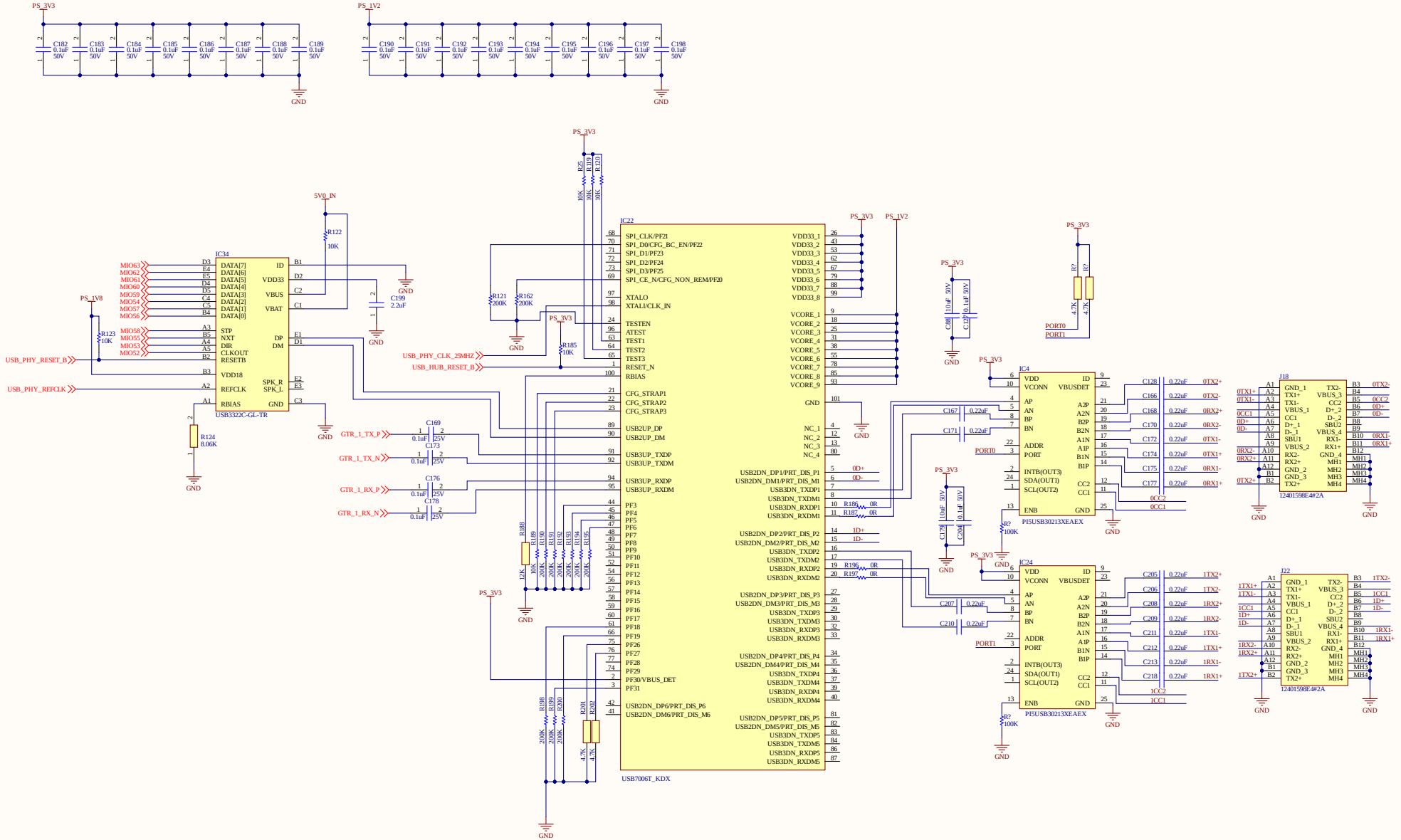
PS_3V3
C182 0.1uF 50V
C183 0.1uF 50V
C184 0.1uF 50V
C185 0.1uF 50V
C186 0.1uF 50V
C187 0.1uF 50V
C188 0.1uF 50V
C189 0.1uF 50V
GND
PS_1V2
C190 0.1uF 50V
C191 0.1uF 50V
C192 0.1uF 50V
C193 0.1uF 50V
C194 0.1uF 50V
C195 0.1uF 50V
C196 0.1uF 50V
C197 0.1uF 50V
C198 0.1uF 50V
5V0_IN
R122 10K
IC34
USB3322C-GL-TR
MIO63
MIO62
MIO61
MIO60
MIO59
MIO54
MIO57
MIO56
MIO58
MIO55
MIO53
MIO52
USB_PHY_RESET_B
USB_PHY_REFCLK
PS_1V8
R123 10K
R124 8.06K
C199 2.2uF
USB_PHY_CLK_25MHZ
USB_HUB_RESET_B
R121 200K
R162 200K
R185 10K
R25 10K
R119 10K
R120 10K
IC22
USB7006T_KDX
GTR_1_TX_P
GTR_1_TX_N
GTR_1_RX_P
GTR_1_RX_N
C169 0.1uF 25V
C173 0.1uF 25V
C176 0.1uF 25V
C178 0.1uF 25V
R188 12K
R189 10K
R190 200K
R191 200K
R192 200K
R193 200K
R194 200K
R195 200K
R198 200K
R199 200K
R200 200K
R201 4.7K
R202 4.7K
R186 0R
R187 0R
R196 0R
R197 0R
C167 0.22uF
C171 0.22uF
C207 0.22uF
C210 0.22uF
C178 10uF 50V
C204 0.1uF 50V
C198 10uF 50V
C120 0.1uF 50V
R2 4.7K
PORT0
PORT1
IC4
PI5USB30213XEAEX
IC24
PI5USB30213XEAEX
R2 100K
C128 0.22uF 0TX2+
C166 0.22uF 0TX2-
C168 0.22uF 0RX2+
C170 0.22uF 0RX2-
C172 0.22uF 0TX1-
C174 0.22uF 0TX1+
C175 0.22uF 0RX1-
C177 0.22uF 0RX1+
0CC2
0CC1
C205 0.22uF 1TX2+
C206 0.22uF 1TX2-
C208 0.22uF 1RX2+
C209 0.22uF 1RX2-
C211 0.22uF 1TX1-
C212 0.22uF 1TX1+
C213 0.22uF 1RX1-
C218 0.22uF 1RX1+
1CC2
1CC1
J18
12401598E4#2A
J22
12401598E4#2A
Title
Size
C
Number
Revision
Date: 11/06/2022
Sheet of
File: C:\embedded_media\..\25 - USB PHY and Hub.SchDoc
Drawn By:

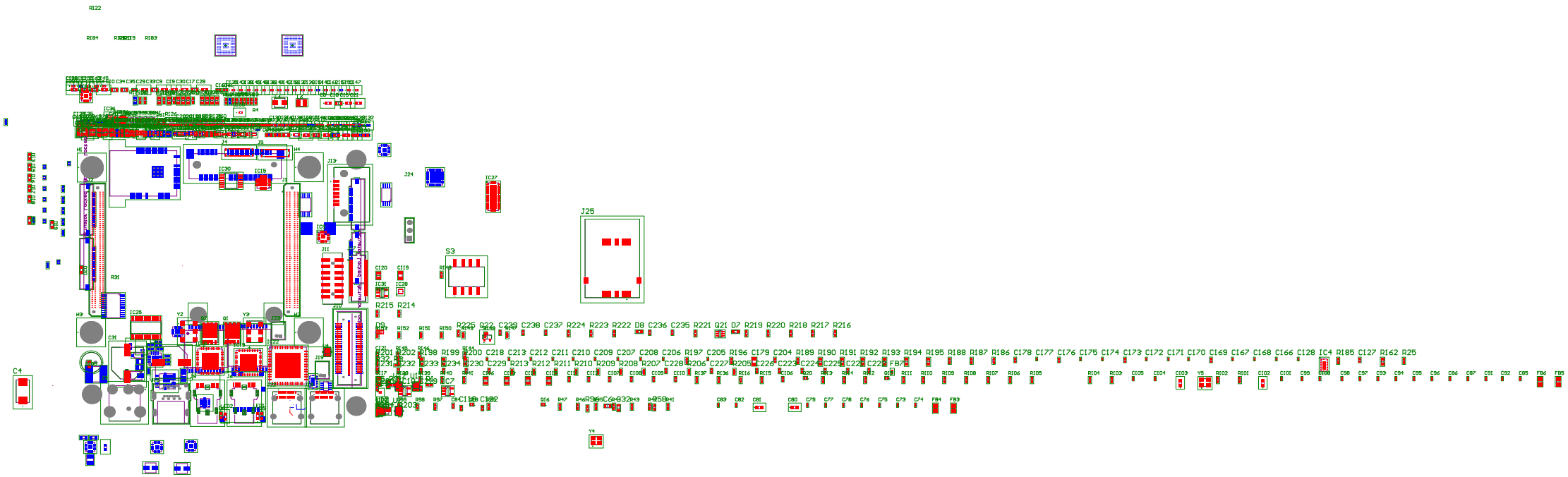
R122
R184 R192 R191 R187
IC34
R4
H1
J4
J5
H4
J19
IC30
IC15
J24
IC27
J25
S3
R198
IC6
J11
J10
C120 C119
IC31 IC28
R215 R214
R31
IC25
Y2
Q2
Q1
Y3
J23
J22
H9
C31
J18
C4
R225 Q22 C239 C238 C237 R224 R223 R222 D8 C236 C235 R221 Q21 D7 R219 R220 R218 R217 R216
R201 R202 R198 R199 R200 C218 C213 C212 C211 C210 C209 C207 C208 C206 R197 C205 R196 C179 C204 R189 R190 R191 R192 R193 R194 R195 R188 R187 R186 C178 C177 C176 C175 C174 C173 C172 C171 C170 C169 C167 C168 C166 C128 IC4 R185 C127 R162 R25
R232 R231 R230 C232 C233 C234 C230 C229 R213 R212 R211 R210 R209 R208 R207 C228 R206 C227 R205 C226 C223 C224 C225 C222 C221 FB7
R17 R20 R41 C46 C18 C11 C17 C10 C108 C109 C110 R30 R36 R16 R15 C106 R20 R43 R44 R42 Q18 R11 R10 R09 R08 R07 R06 R05 R04 R03 C105 C104 C107 Y5 R02 R01 C102 C101 C99 C100 C98 C97 C93 C94 C95 C96 C86 C87 C91 C92 C85 FB6 FB5
U20 U29 R98 R97 C8 C129 C122 Q16 R47 R46 R96 C6 C32 R43 R258 R41 C83 C82 C81 C80 C79 C77 C78 C76 C75 C73 C74 FB4 FB3
R203
Y4

Board Stack Report