Title		
Size A4	Number	Revision
Date: 2/19/2023	Sheet of	
File: C:\embedded_media\..\01 - Title Page.SchDoc	Drawn By:	

Title			
Size A4	Number		Revision
Date:	2/19/2023	Sheet of	
File:	C:\embedded_media\..\02 - Block Diagram.SchDoc	Drawn By:	

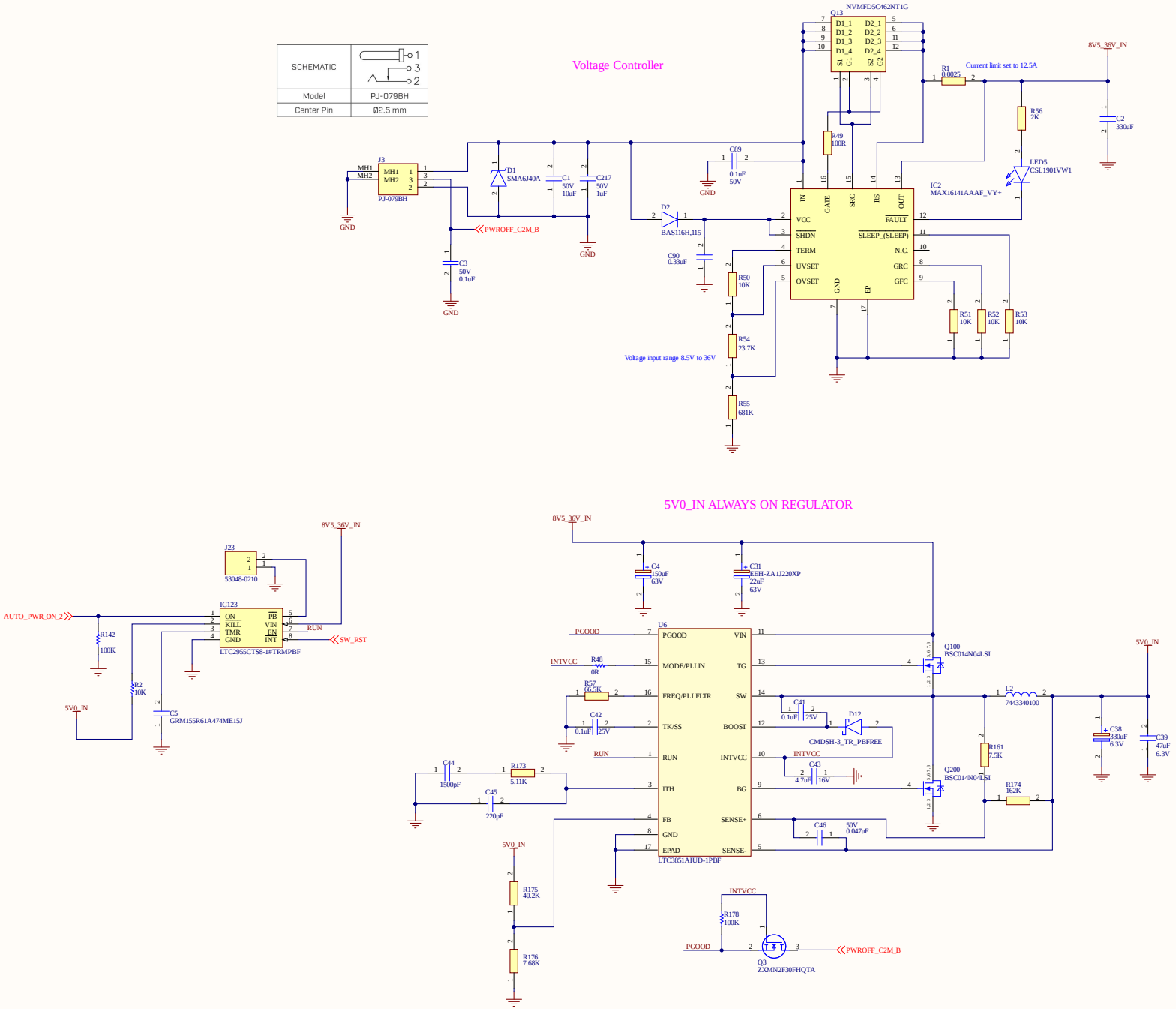

Title			
Size C	Number		Revision
Date: 2/19/2023		Sheet of	
File: C:\embedded_media\...\03 - Always On PwrSch.SchDoc		Drawn By:	

PS_1V2 REGULATOR

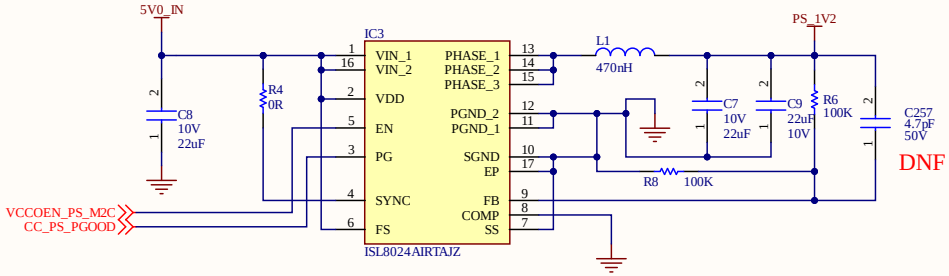

PS_1V8 REGULATOR

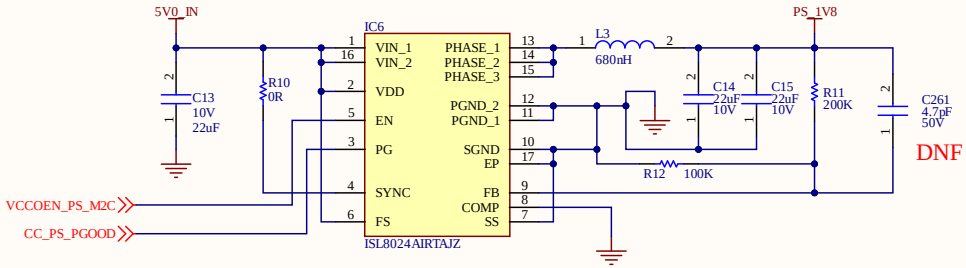

PS_3V3 REGULATOR

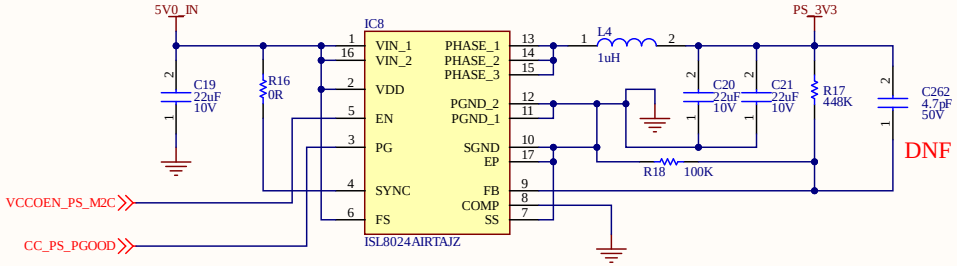

ETH_1V0 REGULATOR

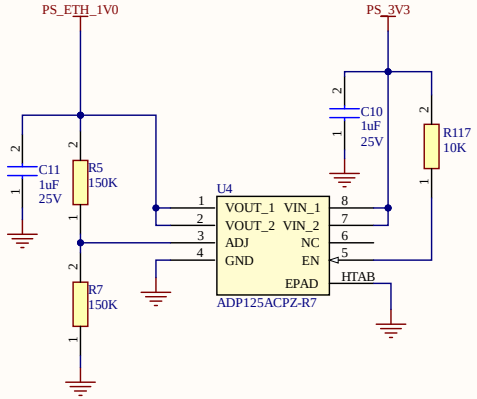

ETH_2V5 REGULATOR

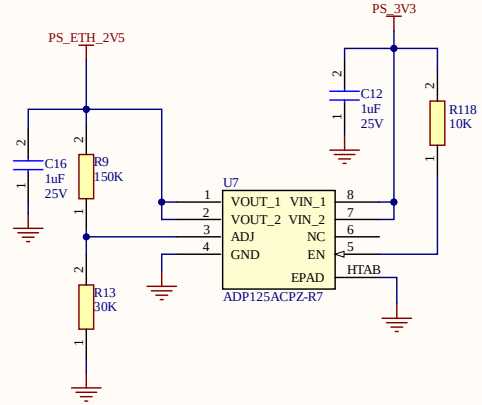

Title		
Size B	Number	Revision
Date: 2/19/2023	Sheet of	
File: C:\embedded_media\..\04 - PS Power.SchDoc	Drawn By:	

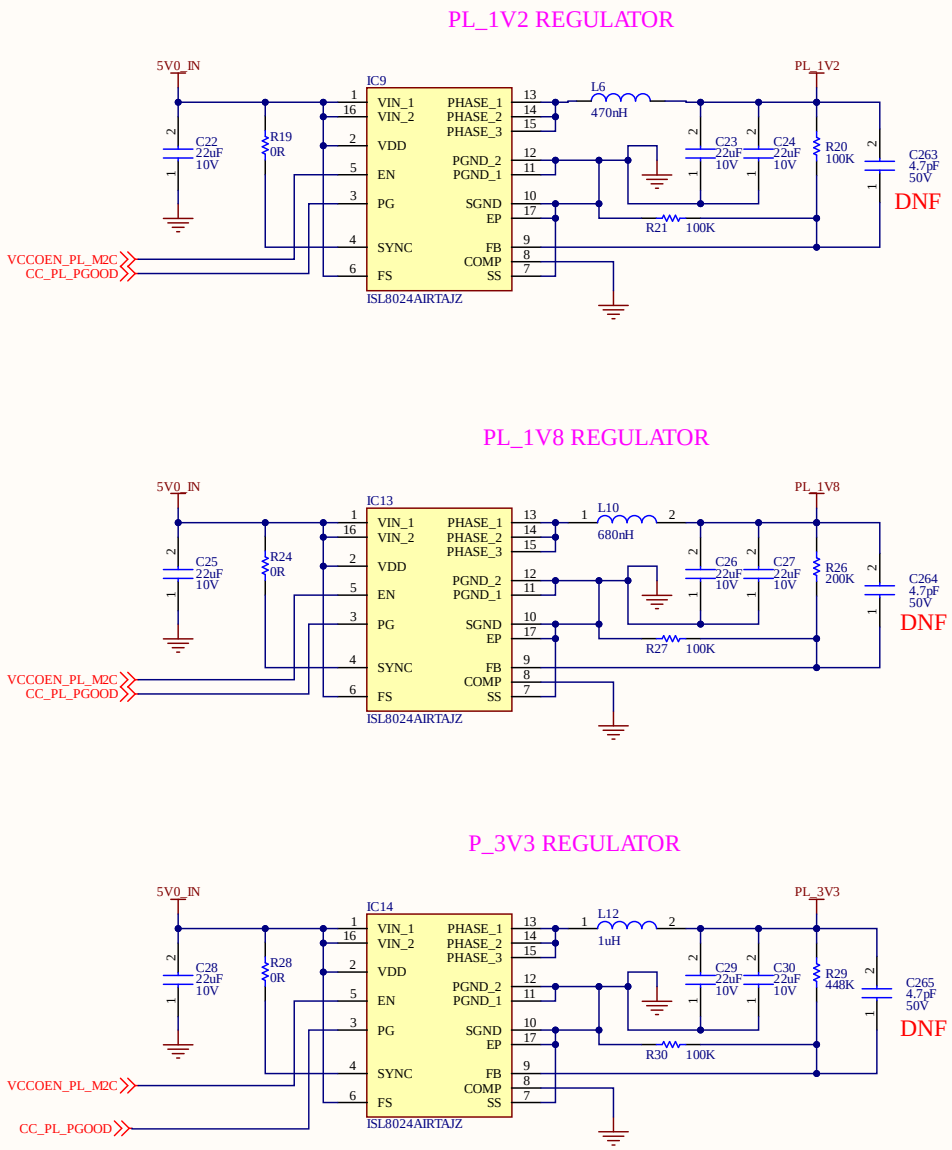

Title		
Size B	Number	Revision
Date: 2/19/2023	Sheet of	
File: C:\embedded_media\..\05 - PL Power.SchDoc	Drawn By:	

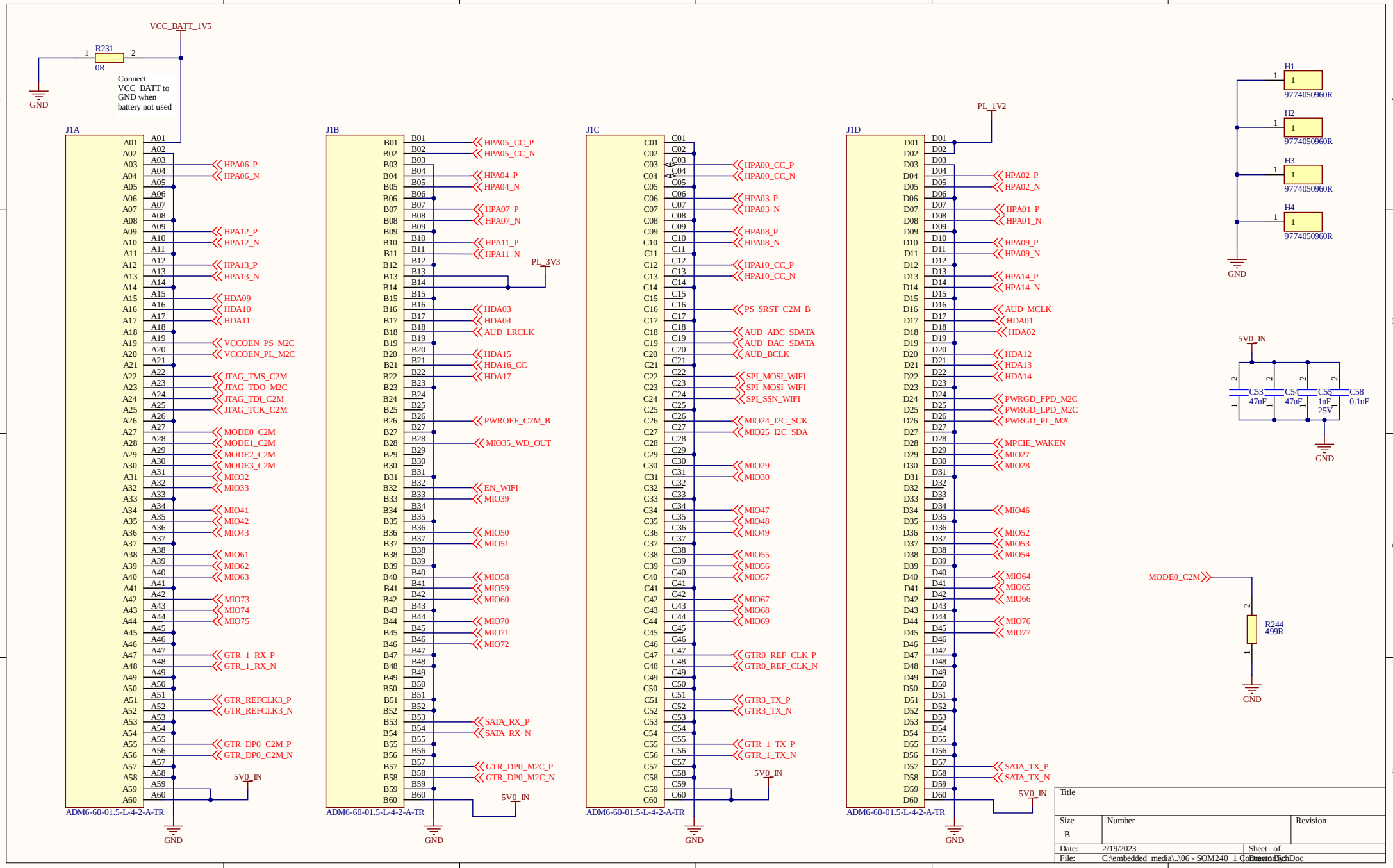
VCC_BATT_1V5
R231
0R
GND
Connect VCC_BATT to GND when battery not used
J1A
ADM6-60-01.5-L-4-2-A-TR
HPA06_P
HPA06_N
HPA12_P
HPA12_N
HPA13_P
HPA13_N
HDA09
HDA10
HDA11
VCCOEN_PS_M2C
VCCOEN_PL_M2C
JTAG_TMS_C2M
JTAG_TDO_M2C
JTAG_TDI_C2M
JTAG_TCK_C2M
MODE0_C2M
MODE1_C2M
MODE2_C2M
MODE3_C2M
MIO32
MIO33
MIO41
MIO42
MIO43
MIO61
MIO62
MIO63
MIO73
MIO74
MIO75
GTR_1_RX_P
GTR_1_RX_N
GTR_REFCLK3_P
GTR_REFCLK3_N
GTR_DP0_C2M_P
GTR_DP0_C2M_N
5V0_IN
J1B
ADM6-60-01.5-L-4-2-A-TR
HPA05_CC_P
HPA05_CC_N
HPA04_P
HPA04_N
HPA07_P
HPA07_N
HPA11_P
HPA11_N
PL_3V3
HDA03
HDA04
AUD_LRCLK
HDA15
HDA16_CC
HDA17
PWROFF_C2M_B
MIO35_WD_OUT
EN_WIFI
MIO39
MIO50
MIO51
MIO58
MIO59
MIO60
MIO70
MIO71
MIO72
SATA_RX_P
SATA_RX_N
GTR_DP0_M2C_P
GTR_DP0_M2C_N
5V0_IN
J1C
ADM6-60-01.5-L-4-2-A-TR
HPA00_CC_P
HPA00_CC_N
HPA03_P
HPA03_N
HPA08_P
HPA08_N
HPA10_CC_P
HPA10_CC_N
PS_SRST_C2M_B
AUD_ADC_SDATA
AUD_DAC_SDATA
AUD_BCLK
SPI_MOSI_WIFI
SPI_MOSI_WIFI
SPI_SSN_WIFI
MIO24_I2C_SCK
MIO25_I2C_SDA
MIO29
MIO30
MIO47
MIO48
MIO49
MIO55
MIO56
MIO57
MIO67
MIO68
MIO69
GTR0_REF_CLK_P
GTR0_REF_CLK_N
GTR3_TX_P
GTR3_TX_N
GTR_1_TX_P
GTR_1_TX_N
5V0_IN
J1D
ADM6-60-01.5-L-4-2-A-TR
PL_1V2
HPA02_P
HPA02_N
HPA01_P
HPA01_N
HPA09_P
HPA09_N
HPA14_P
HPA14_N
AUD_MCLK
HDA01
HDA02
HDA12
HDA13
HDA14
PWRGD_FPD_M2C
PWRGD_LPD_M2C
PWRGD_PL_M2C
MPCIE_WAKEN
MIO27
MIO28
MIO46
MIO52
MIO53
MIO54
MIO64
MIO65
MIO66
MIO76
MIO77
SATA_TX_P
SATA_TX_N
5V0_IN
H1
9774050960R
H2
9774050960R
H3
9774050960R
H4
9774050960R
5V0_IN
C53 47uF
C54 47uF
C55 1uF 25V
C58 0.1uF
MODE0_C2M
R244 499R
Title
Size B
Number
Revision
Date: 2/19/2023
Sheet of
File: C:\embedded_media\..\06 - SOM240_1 Connector.SchDoc
Drawn By:

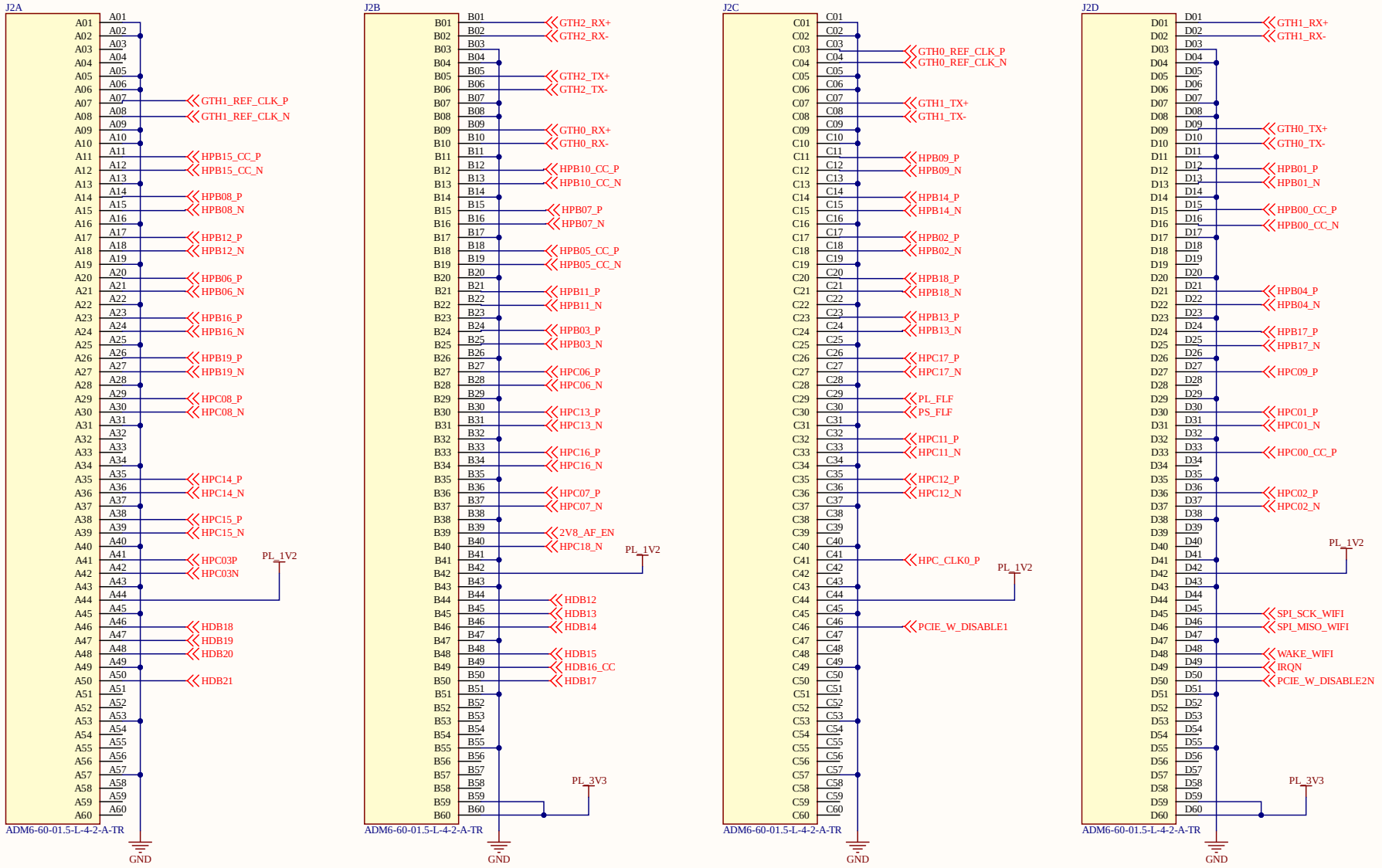

Title		
Size B	Number	Revision
Date: 2/19/2023	Sheet of	
File: C:\embedded_media\..\07 - SOM240_2 Connectors.SchDoc	Drawn By:	

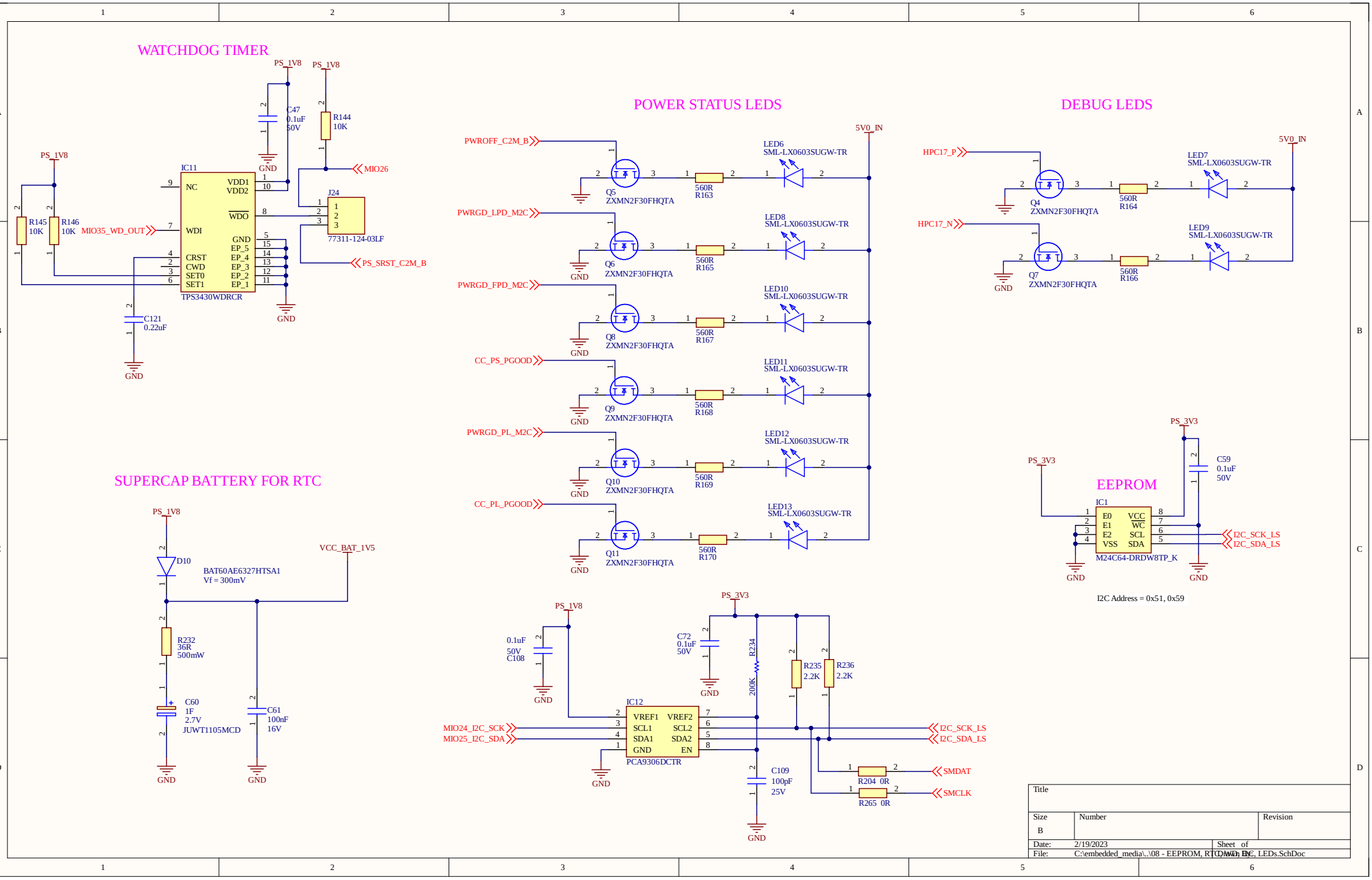
WATCHDOG TIMER
PS_1V8
C47
0.1uF
50V
R144
10K
MIO26
IC11
NC
VDD1
VDD2
WDO
WDI
GND
EP_5
EP_4
EP_3
EP_2
EP_1
CRST
CWD
SET0
SET1
TPS3430WDRCR
J24
77311-124-03LF
PS_SRST_C2M_B
R145
10K
R146
10K
MIO35_WD_OUT
C121
0.22uF
GND
POWER STATUS LEDS
5V0_IN
PWROFF_C2M_B
PWRGD_LPD_M2C
PWRGD_FPD_M2C
CC_PS_PGOOD
PWRGD_PL_M2C
CC_PL_PGOOD
Q5
Q6
Q8
Q9
Q10
Q11
ZXMN2F30FHQTA
560R
R163
R165
R167
R168
R169
R170
LED6
LED8
LED10
LED11
LED12
LED13
SML-LX0603SUGW-TR
DEBUG LEDS
HPC17_P
HPC17_N
Q4
Q7
R164
R166
LED7
LED9
SUPERCAP BATTERY FOR RTC
D10
BAT60AE6327HTSA1
Vf = 300mV
VCC_BAT_1V5
R232
36R
500mW
C60
1F
2.7V
JUWT1105MCD
C61
100nF
16V
PS_3V3
C59
0.1uF
50V
EEPROM
IC1
E0
E1
E2
VSS
VCC
WC
SCL
SDA
M24C64-DRDW8TP_K
I2C_SCK_LS
I2C_SDA_LS
I2C Address = 0x51, 0x59
0.1uF
50V
C108
C72
0.1uF
50V
R234
200K
R235
2.2K
R236
2.2K
IC12
VREF1
VREF2
SCL1
SCL2
SDA1
SDA2
GND
EN
PCA9306DCTR
MIO24_I2C_SCK
MIO25_I2C_SDA
C109
100pF
25V
R204 0R
R265 0R
SMDAT
SMCLK
Title
Size
B
Number
Revision
Date: 2/19/2023
Sheet of
File: C:\embedded_media\..\08 - EEPROM, RTC, WD, PC, LEDs.SchDoc

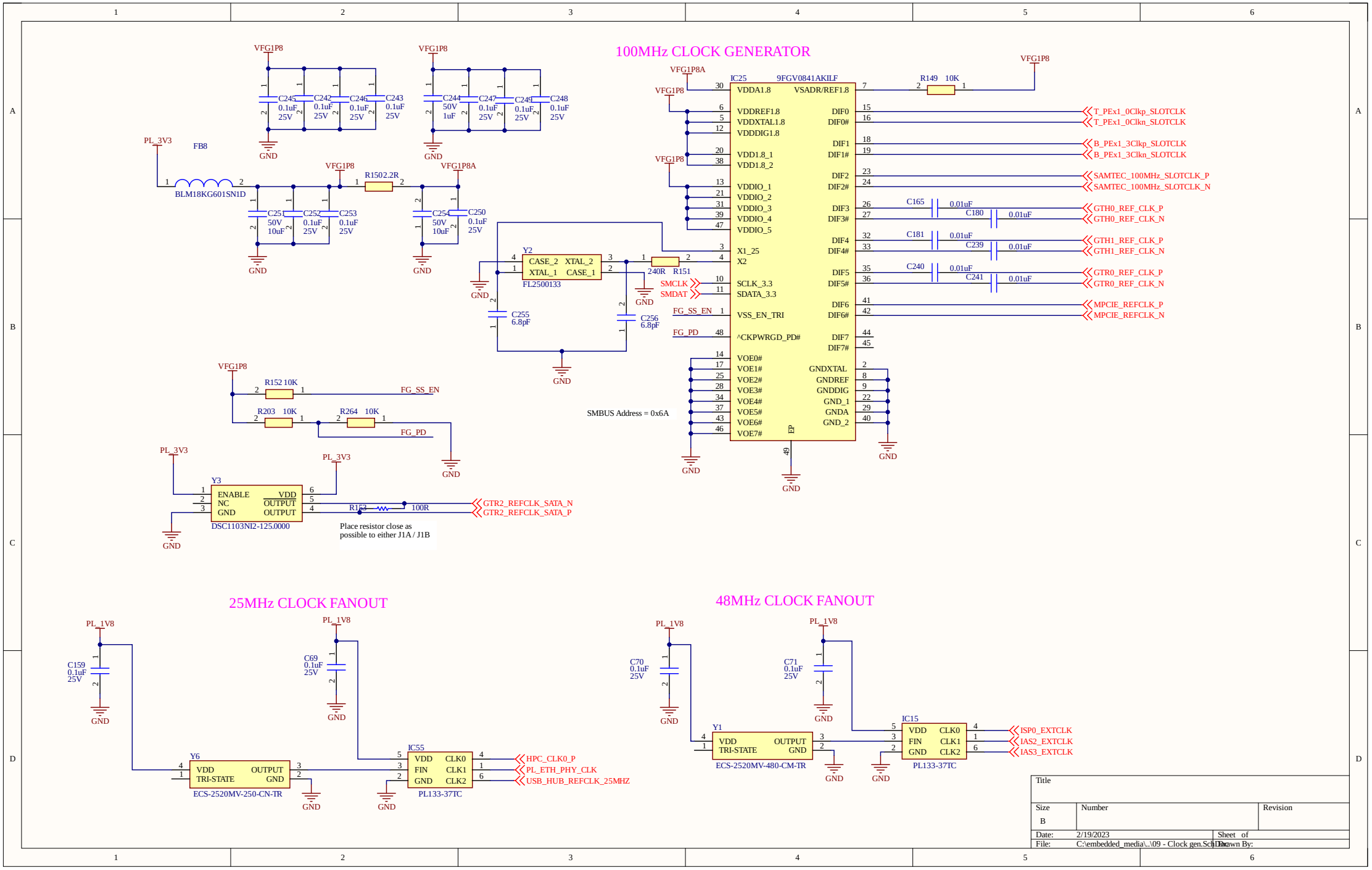
100MHz CLOCK GENERATOR
IC25 9FGV0841AKILF
VFG1P8
VFG1P8A
PL_3V3
FB8
BLM18KG601SN1D
R1502.2R
C245 0.1uF 25V
C242 0.1uF 25V
C246 0.1uF 25V
C243 0.1uF 25V
C244 50V 1uF
C247 0.1uF 25V
C241 0.1uF 25V
C248 0.1uF 25V
C251 50V 10uF
C252 0.1uF 25V
C253 0.1uF 25V
C254 50V 10uF
C250 0.1uF 25V
GND
Y2
CASE_2 XTAL_2
XTAL_1 CASE_1
FL2500133
240R R151
C255 6.8pF
C256 6.8pF
R149 10K
VDDA1.8
VSADR/REF1.8
VDDREF1.8
VDDXTAL1.8
VDDDIG1.8
VDD1.8_1
VDD1.8_2
VDDIO_1
VDDIO_2
VDDIO_3
VDDIO_4
VDDIO_5
X1_25
X2
SCLK_3.3
SDATA_3.3
VSS_EN_TRI
^CKPWRGD_PD#
VOE0#
VOE1#
VOE2#
VOE3#
VOE4#
VOE5#
VOE6#
VOE7#
EP
DIF0
DIF0#
DIF1
DIF1#
DIF2
DIF2#
DIF3
DIF3#
DIF4
DIF4#
DIF5
DIF5#
DIF6
DIF6#
DIF7
DIF7#
GNDXTAL
GNDREF
GNDDIG
GND_1
GNDA
GND_2
SMCLK
SMDAT
FG_SS_EN
FG_PD
T_PEx1_0Clkp_SLOTCLK
T_PEx1_0Clkn_SLOTCLK
B_PEx1_3Clkp_SLOTCLK
B_PEx1_3Clkn_SLOTCLK
SAMTEC_100MHz_SLOTCLK_P
SAMTEC_100MHz_SLOTCLK_N
GTH0_REF_CLK_P
GTH0_REF_CLK_N
GTH1_REF_CLK_P
GTH1_REF_CLK_N
GTR0_REF_CLK_P
GTR0_REF_CLK_N
MPCIE_REFCLK_P
MPCIE_REFCLK_N
C165 0.01uF
C180 0.01uF
C181 0.01uF
C239 0.01uF
C240 0.01uF
C241 0.01uF
SMBUS Address = 0x6A
R152 10K
R203 10K
R264 10K
Y3
ENABLE VDD
NC OUTPUT
GND OUTPUT
DSC1103NI2-125.0000
R153 100R
GTR2_REFCLK_SATA_N
GTR2_REFCLK_SATA_P
Place resistor close as possible to either J1A / J1B
25MHz CLOCK FANOUT
PL_1V8
C159 0.1uF 25V
C69 0.1uF 25V
Y6
VDD OUTPUT
TRI-STATE GND
ECS-2520MV-250-CN-TR
IC55
VDD CLK0
FIN CLK1
GND CLK2
PL133-37TC
HPC_CLK0_P
PL_ETH_PHY_CLK
USB_HUB_REFCLK_25MHZ
48MHz CLOCK FANOUT
C70 0.1uF 25V
C71 0.1uF 25V
Y1
VDD OUTPUT
TRI-STATE GND
ECS-2520MV-480-CM-TR
IC15
VDD CLK0
FIN CLK1
GND CLK2
PL133-37TC
ISP0_EXTCLK
IAS2_EXTCLK
IAS3_EXTCLK
Title
Size B
Number
Revision
Date: 2/19/2023
Sheet of
File: C:\embedded_media\..\09 - Clock gen.SchDoc
Drawn By:

FTDI JTAG/UART

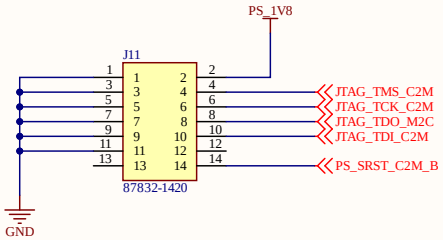

Title		
Size B	Number	Revision
Date: 2/19/2023	Sheet of	
File: C:\embedded_media\..\10 - JTAG UART.SchDoc	Drawn By:	

Display Port

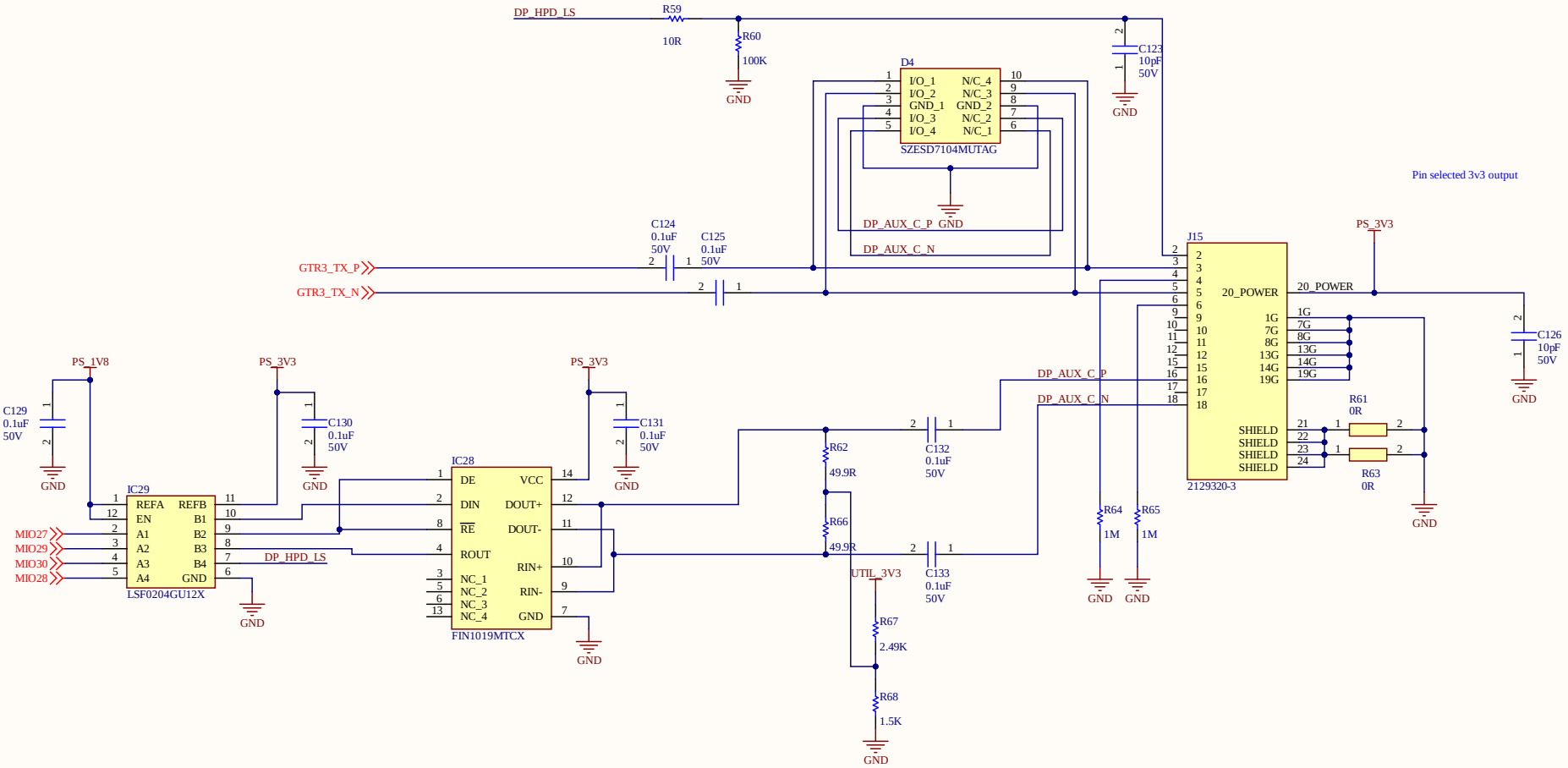

Title		
Size B	Number	Revision
Date: 2/19/2023	Sheet of	
File: C:\embedded_media\..\11 - Display Port.SchDoc	Drawn By:	

Camera MIPI connectors

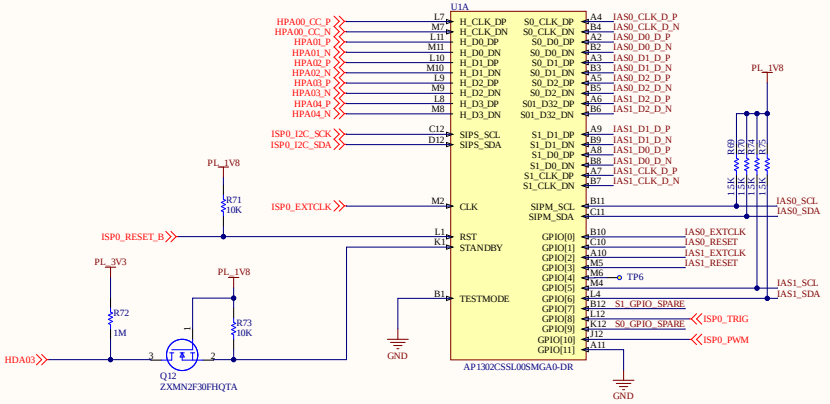

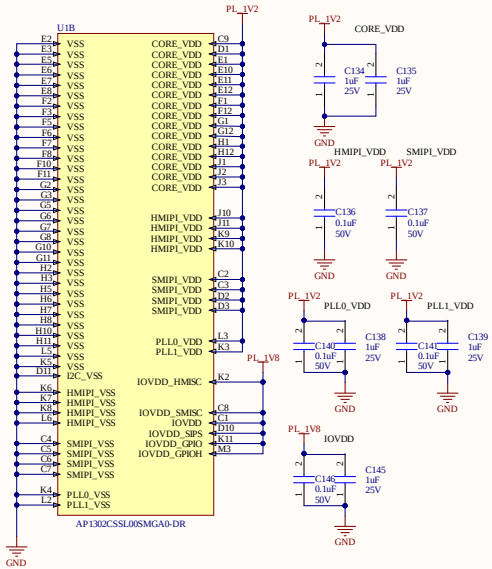

IAS0

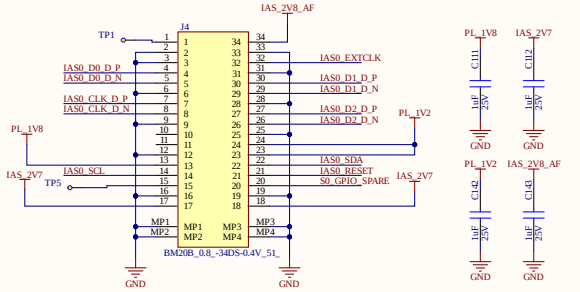

IAS1

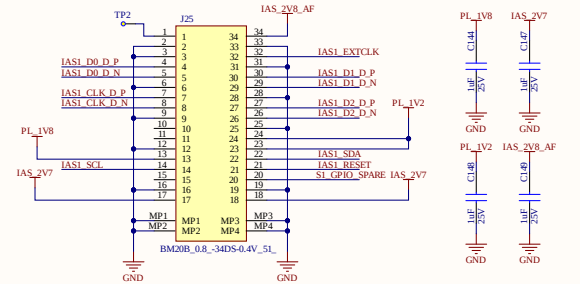

IAS2

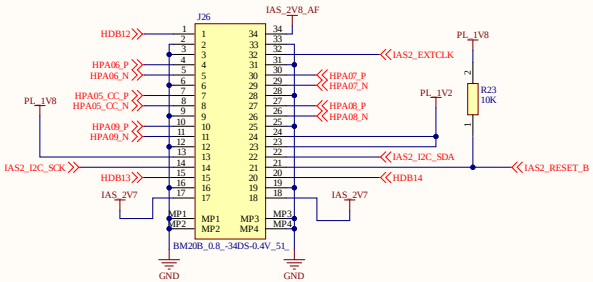

IAS3

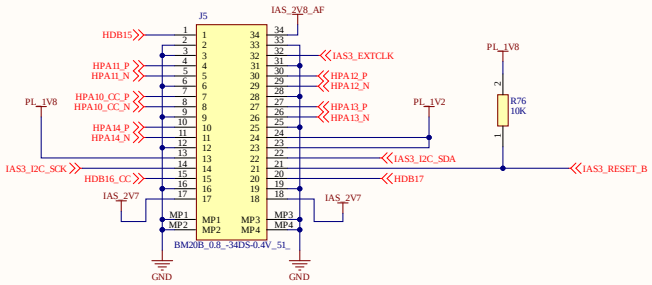

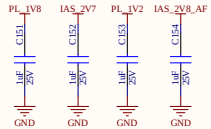

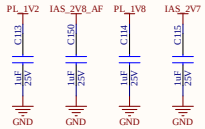

Title			
Size C	Number		Revision
Date: 2/19/2023		Sheet of	
File: C:\embedded_media\...\12 - IAS MIPI Cam.SchDoc			

Ethernet PHY for PS

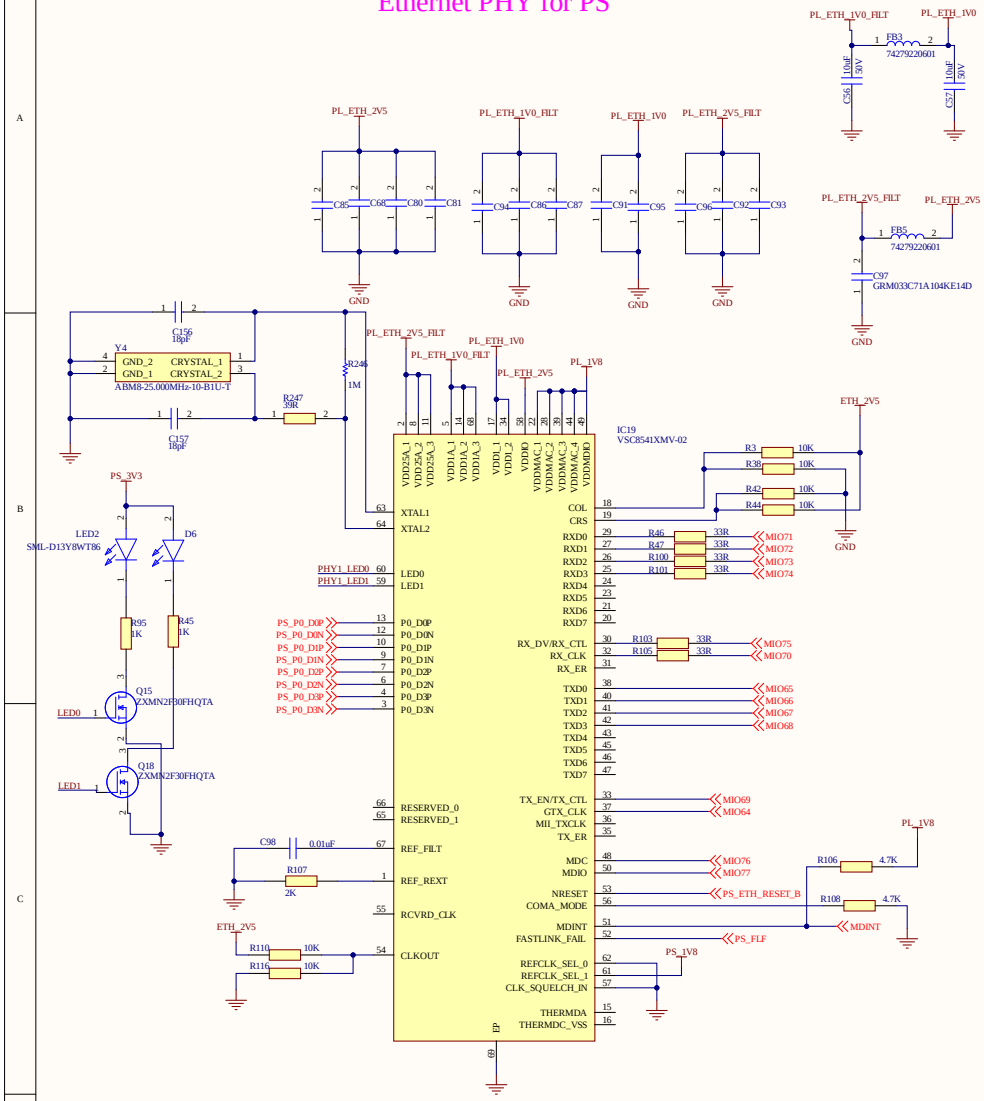

Ethernet PHY for PL

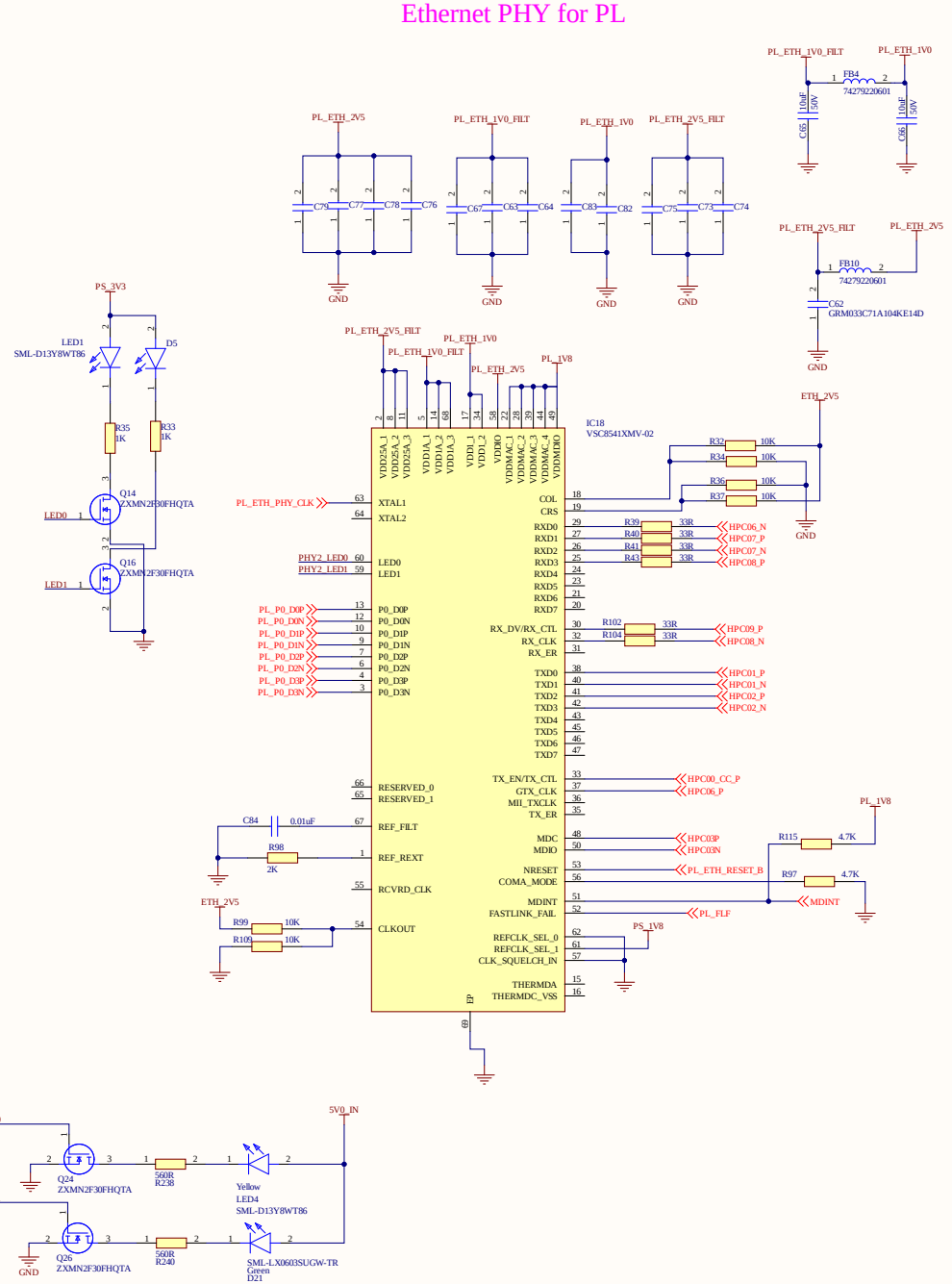

Title		
Size C	Number	Revision
Date: 2/19/2023	Sheet of	
File: C:\embedded_media\..\13 - PS+PL Ethernet.SchDoc		

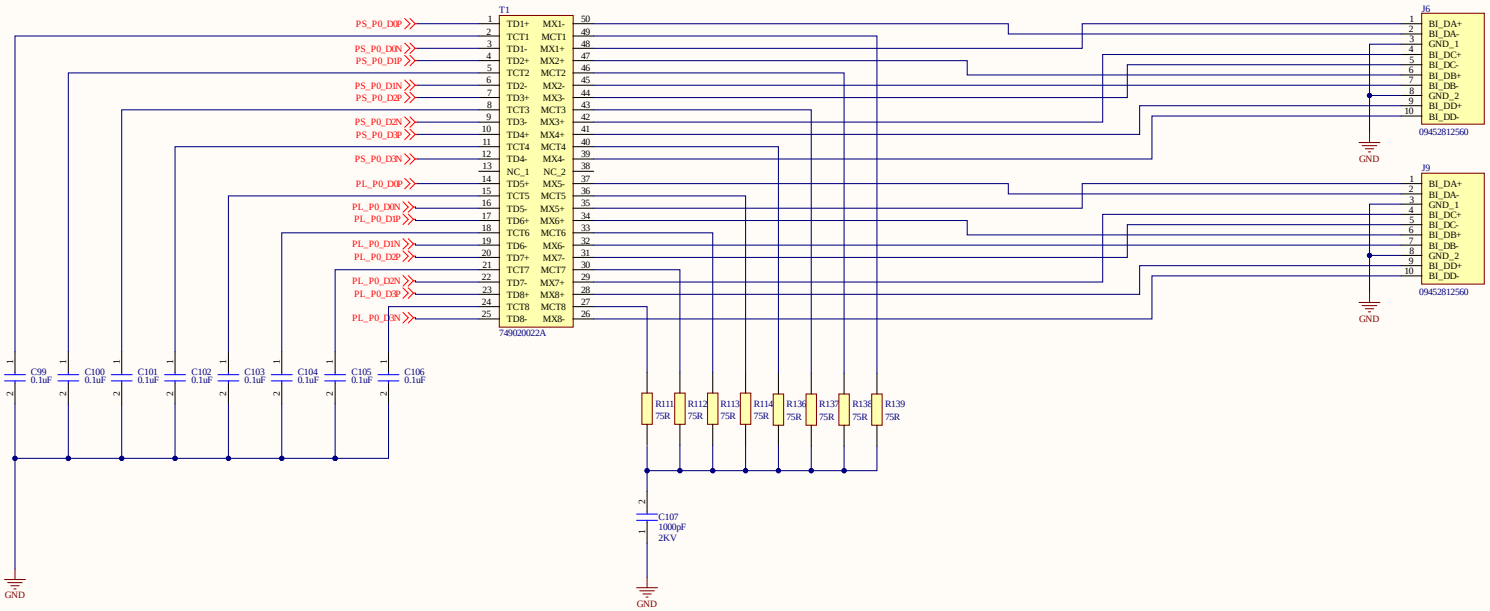

Title		
Size C	Number	Revision
Date: 2/19/2023	Sheet of	
File: C:\embedded_media\...\14 - PS+PL Ethernet.SchDoc		

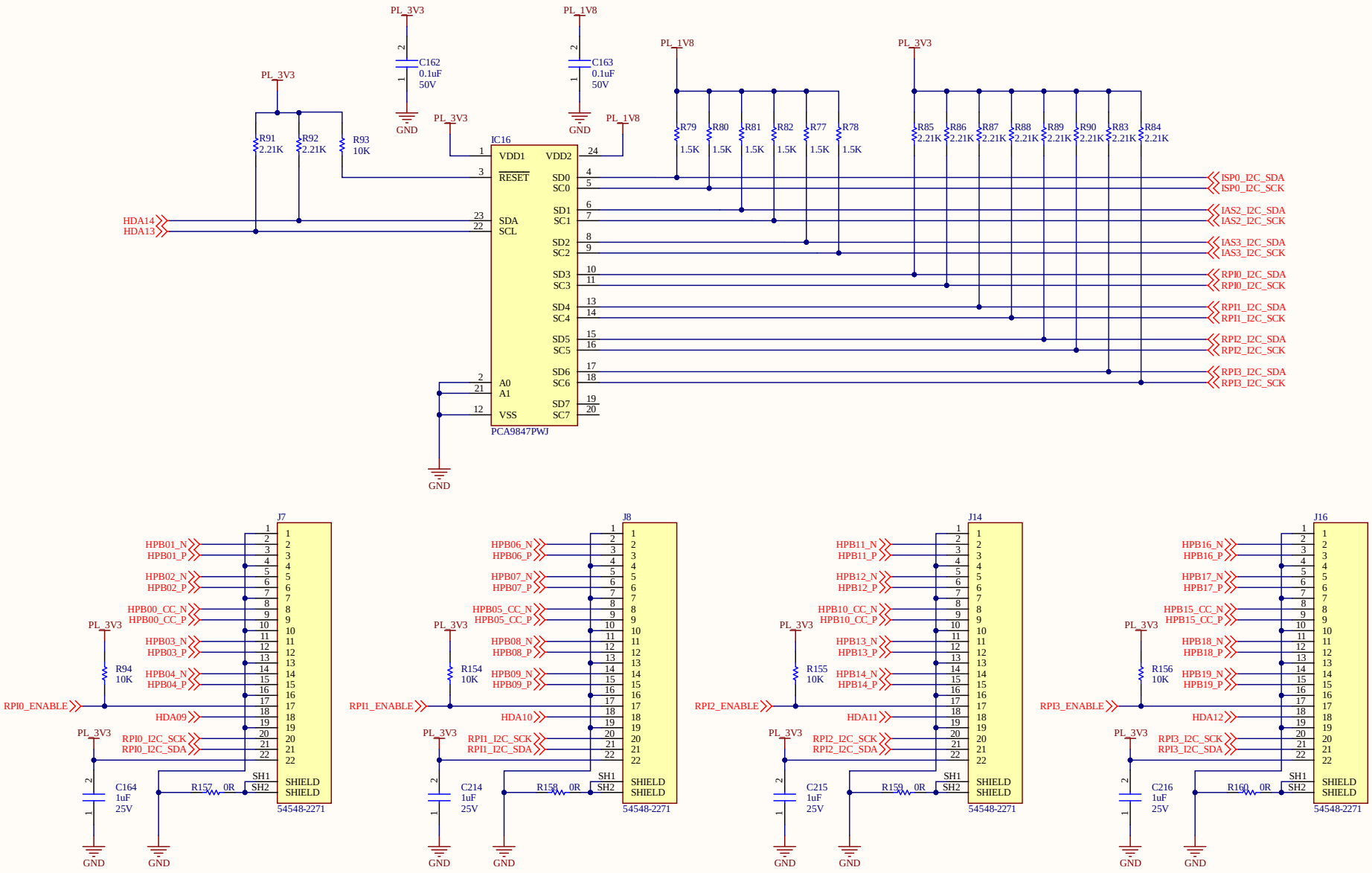

Title		
Size B	Number	Revision
Date: 2/19/2023		Sheet of
File: C:\embedded_media\..\15 - RPi Camera Connector By I2C.SchDoc		Drawn By:

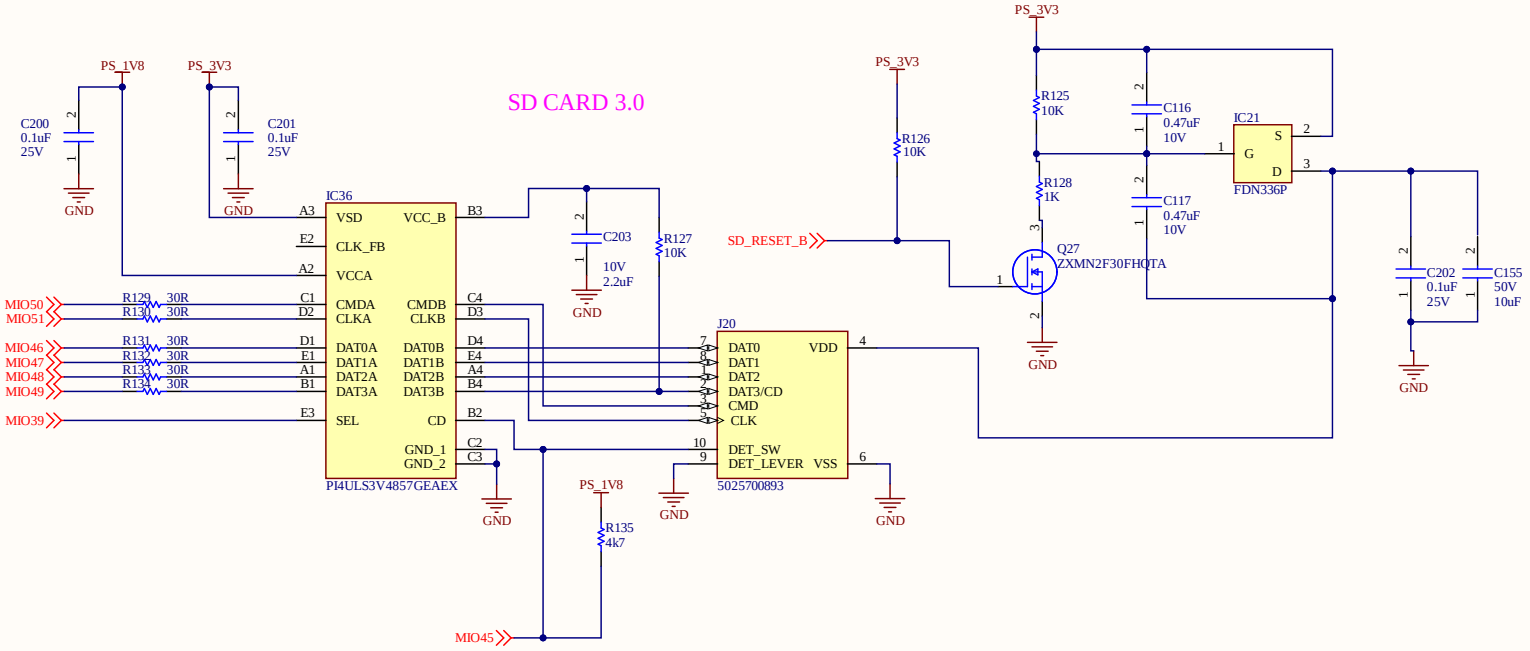

Title		
Size B	Number	Revision
Date: 2/19/2023	Sheet of	
File: C:\embedded_media\..\16 - SD Card, PMOD.SchDoc	Drawn By:	

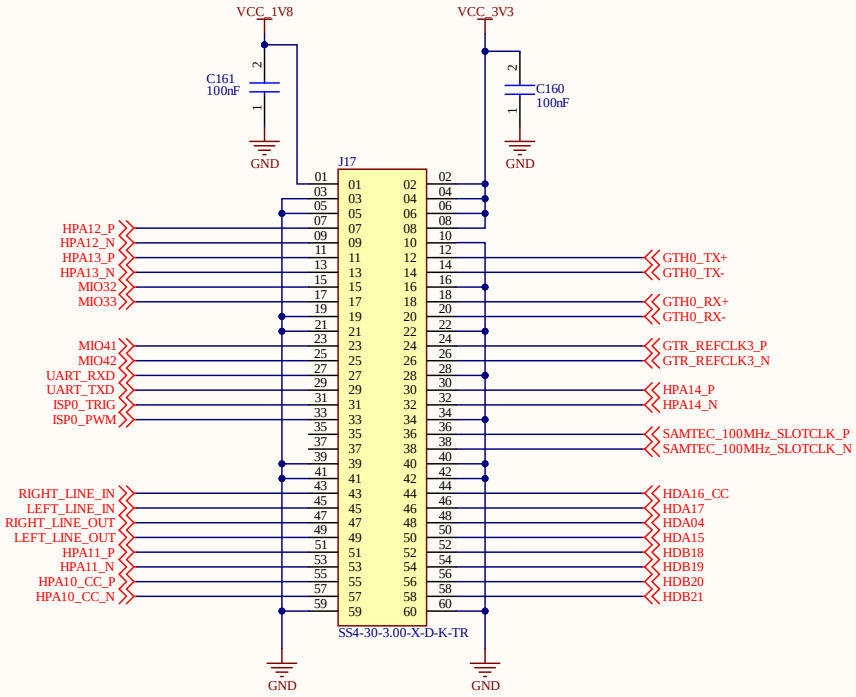

Title		
Size B	Number	Revision
Date: 2/19/2023	Sheet of	
File: C:\embedded_media\..\17 - Samtec Razor Beam connector .SchDoc	Drawn by:	

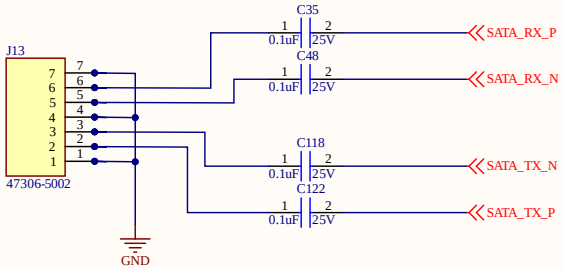

Title		
Size B	Number	Revision
Date: 2/19/2023	Sheet of	
File: C:\embedded_media\..\18 - SATA Connector.SchDoc	Drawn By:	

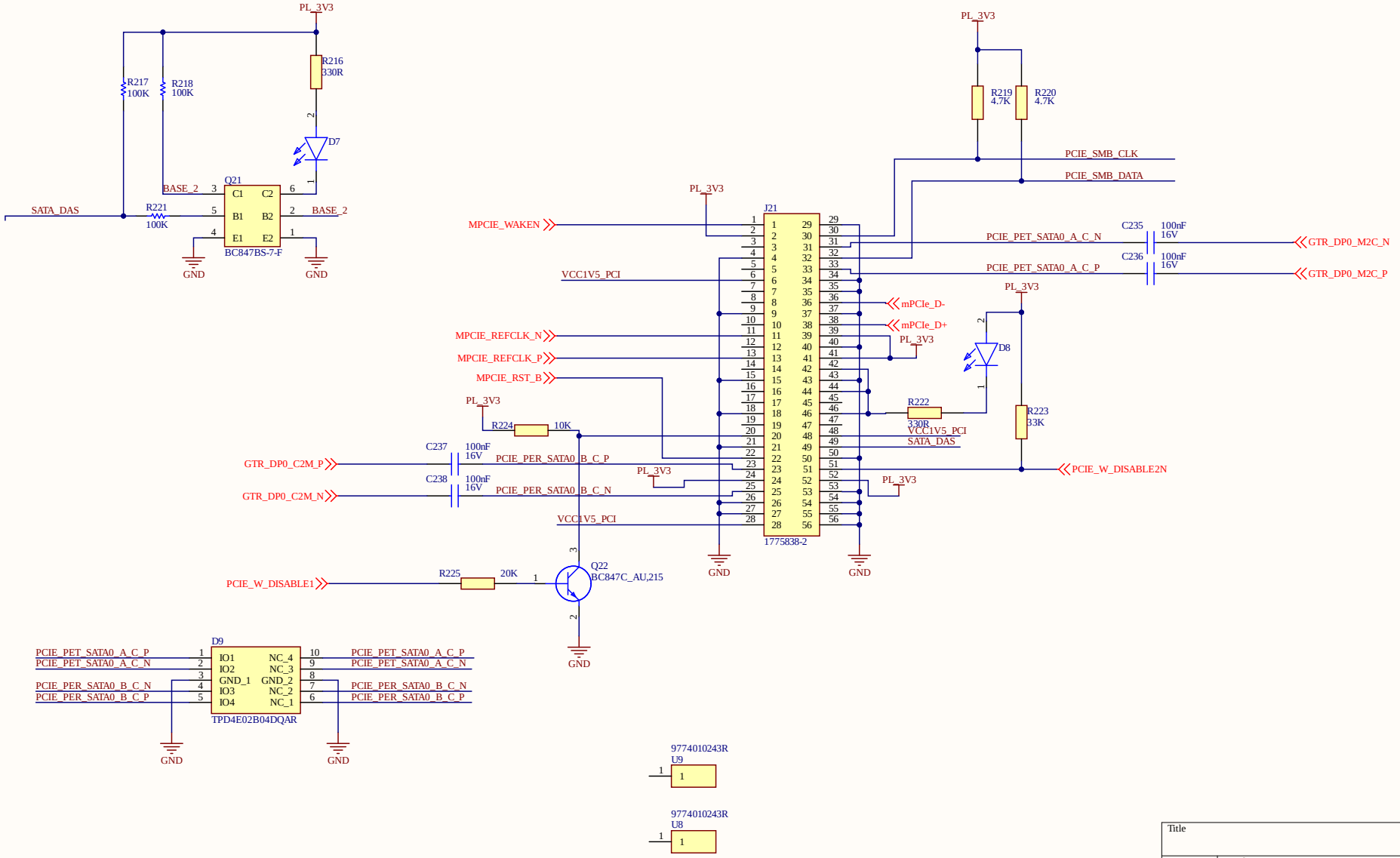

Title		
Size B	Number	Revision
Date: 2/19/2023	Sheet of	
File: C:\embedded_media\..\19 - mPCIe.SchDoc	Drawn By:	

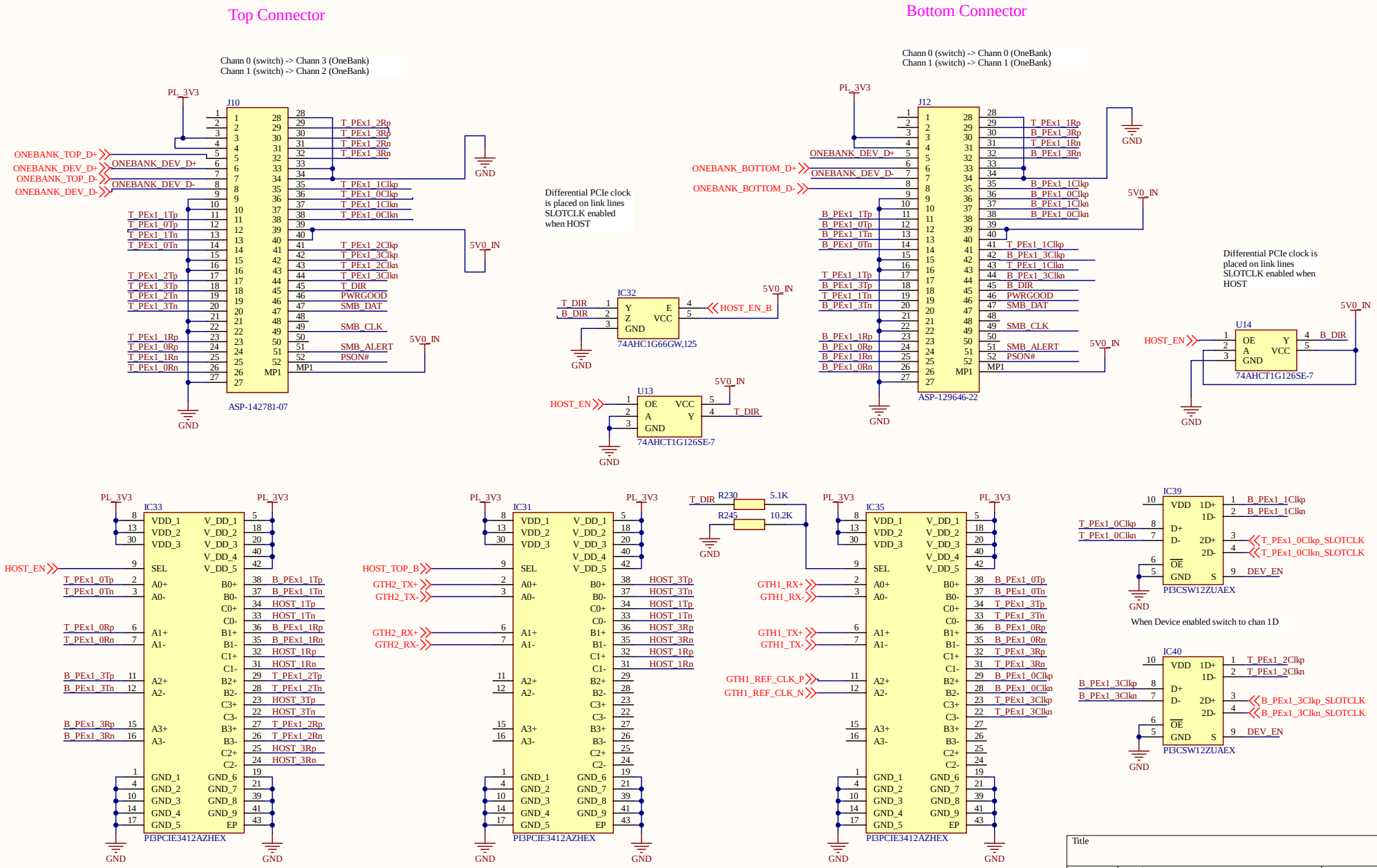
Top Connector
Chann 0 (switch) -> Chann 3 (OneBank)
Chann 1 (switch) -> Chann 2 (OneBank)
PL_3V3
J10
ASP-142781-07
ONEBANK_TOP_D+
ONEBANK_DEV_D+
ONEBANK_TOP_D-
ONEBANK_DEV_D-
T_PEx1_2Rp
T_PEx1_3Rp
T_PEx1_2Rn
T_PEx1_3Rn
T_PEx1_1Clkp
T_PEx1_0Clkp
T_PEx1_1Clkn
T_PEx1_0Clkn
T_PEx1_2Clkp
T_PEx1_3Clkp
T_PEx1_2Clkn
T_PEx1_3Clkn
T_DIR
PWRGOOD
SMB_DAT
SMB_CLK
SMB_ALERT
PSON#
MP1
5V0_IN
GND
Differential PCIe clock is placed on link lines SLOTCLK enabled when HOST
IC32
74AHC1G66GW,125
HOST_EN_B
U13
74AHCT1G126SE-7
HOST_EN
Bottom Connector
Chann 0 (switch) -> Chann 0 (OneBank)
Chann 1 (switch) -> Chann 1 (OneBank)
J12
ASP-129646-22
ONEBANK_BOTTOM_D+
ONEBANK_BOTTOM_D-
B_PEx1_1Rp
B_PEx1_3Rp
B_PEx1_1Rn
B_PEx1_3Rn
B_PEx1_1Clkp
B_PEx1_0Clkp
B_PEx1_1Clkn
B_PEx1_0Clkn
B_PEx1_1Tp
B_PEx1_0Tp
B_PEx1_1Tn
B_PEx1_0Tn
B_PEx1_3Clkp
B_PEx1_3Clkn
B_DIR
Differential PCIe clock is placed on link lines SLOTCLK enabled when HOST
U14
74AHCT1G126SE-7
IC33
PI3PCIE3412AZHEX
When Device enabled switch to chan B
IC31
HOST_TOP_B
GTH2_TX+
GTH2_TX-
GTH2_RX+
GTH2_RX-
HOST_3Tp
HOST_3Tn
HOST_1Tp
HOST_1Tn
HOST_3Rp
HOST_3Rn
HOST_1Rp
HOST_1Rn
R230
5.1K
R245
10.2K
IC35
GTH1_RX+
GTH1_RX-
GTH1_TX+
GTH1_TX-
GTH1_REF_CLK_P
GTH1_REF_CLK_N
IC39
PI3CSW12ZUAEX
T_PEx1_0Clkp
T_PEx1_0Clkn
T_PEx1_0Clkp_SLOTCLK
T_PEx1_0Clkn_SLOTCLK
DEV_EN
When Device enabled switch to chan 1D
IC40
B_PEx1_3Clkp
B_PEx1_3Clkn
B_PEx1_3Clkp_SLOTCLK
B_PEx1_3Clkn_SLOTCLK
Title
Size
B
Number
Revision
Date: 2/19/2023
Sheet of
File: C:\embedded_media\..\20 - OneBank Connectors.SchDoc

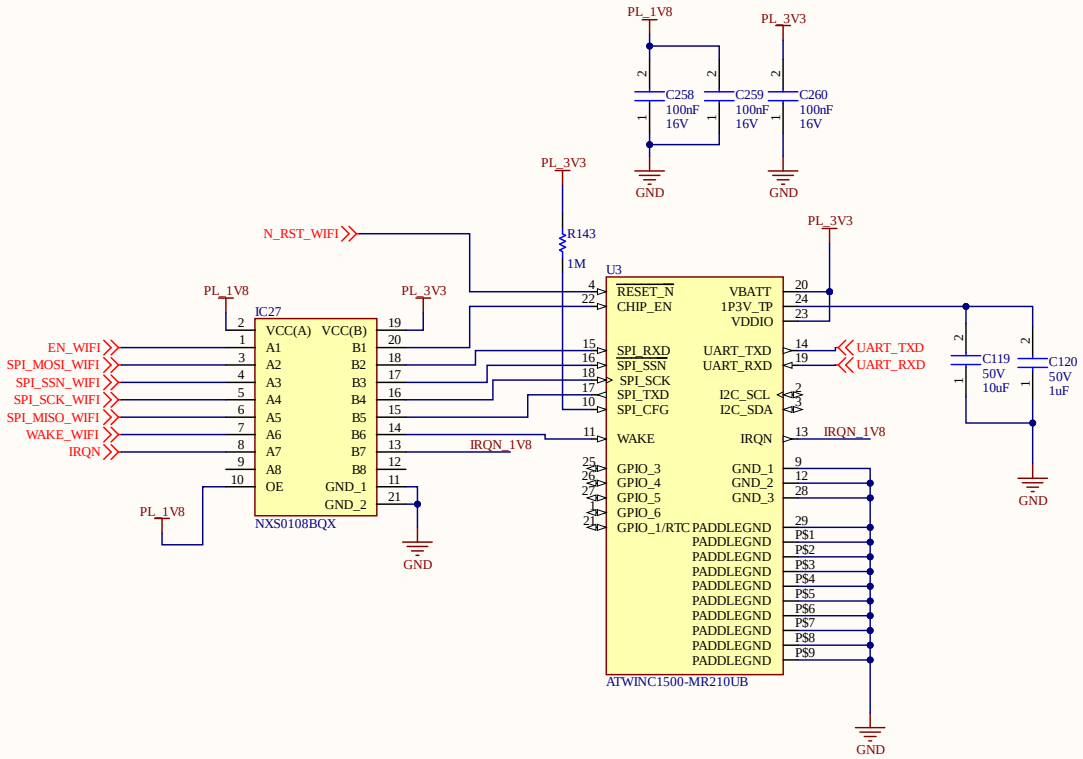

Title		
Size B	Number	Revision
Date: 2/19/2023		Sheet of
File: C:\embedded_media\..\21 - WiFi.SchDoc		Drawn By:

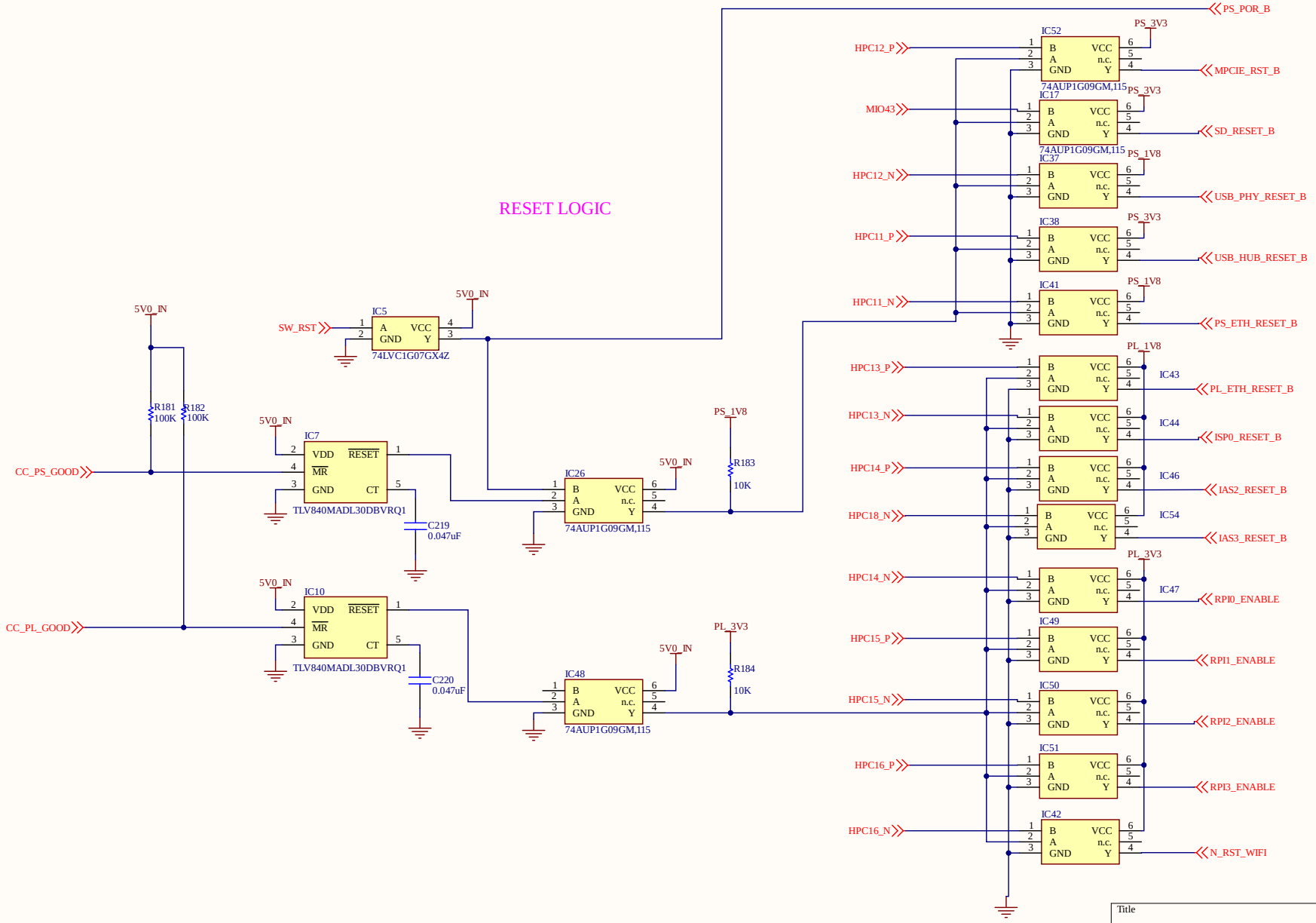

Title		
Size B	Number	Revision
Date: 2/19/2023	Sheet of	
File: C:\embedded_media\..\22 - Reset Logic.SchDoc	Drawn By:	

SWITCH SETTINGS

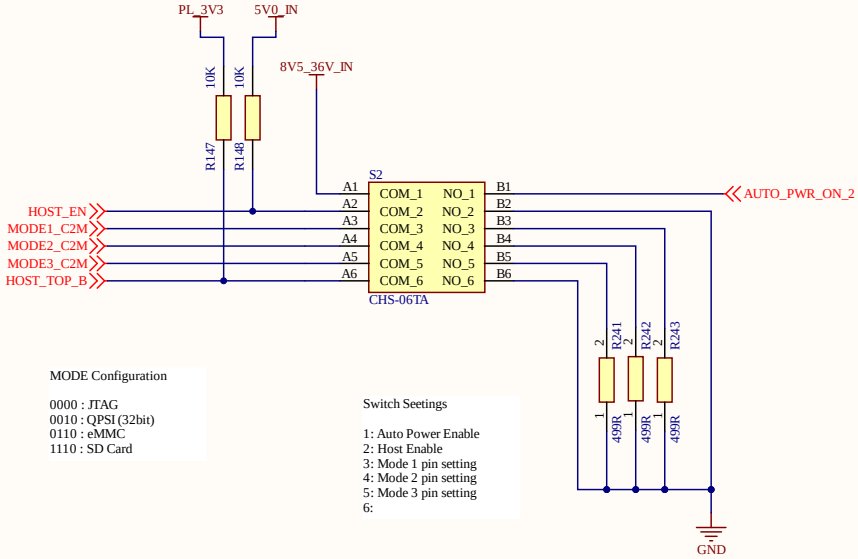

MODE Configuration

0000 : JTAG
0010 : QPSI (32bit)
0110 : eMMC
1110 : SD Card

Switch Seetings

1: Auto Power Enable
2: Host Enable
3: Mode 1 pin setting
4: Mode 2 pin setting
5: Mode 3 pin setting
6:

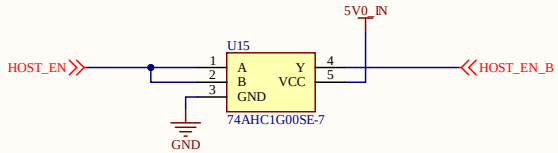

12V FAN HEADER

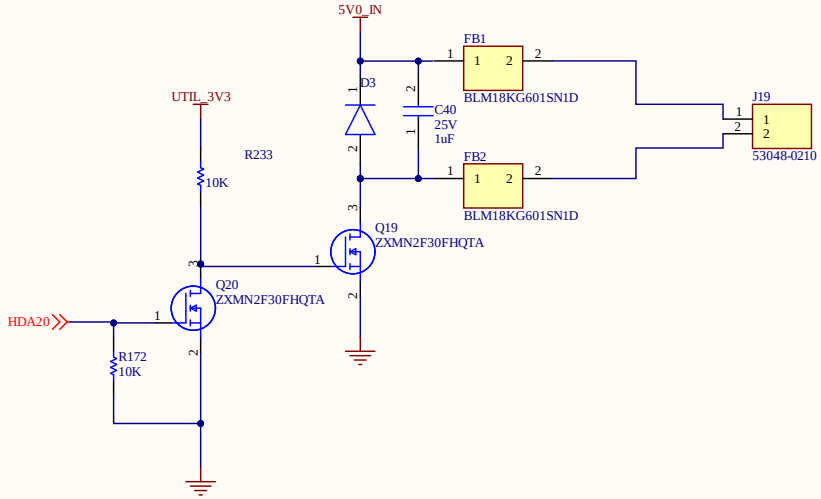

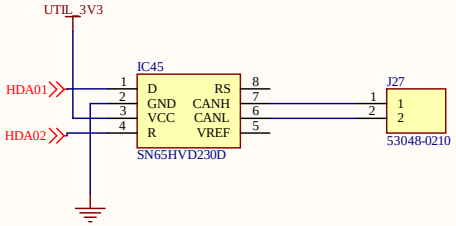

Title		
Size B	Number	Revision
Date: 2/19/2023		Sheet of
File: C:\embedded_media\..\23 - Fan, CAN & Switches.SchDoc		Drawn By:

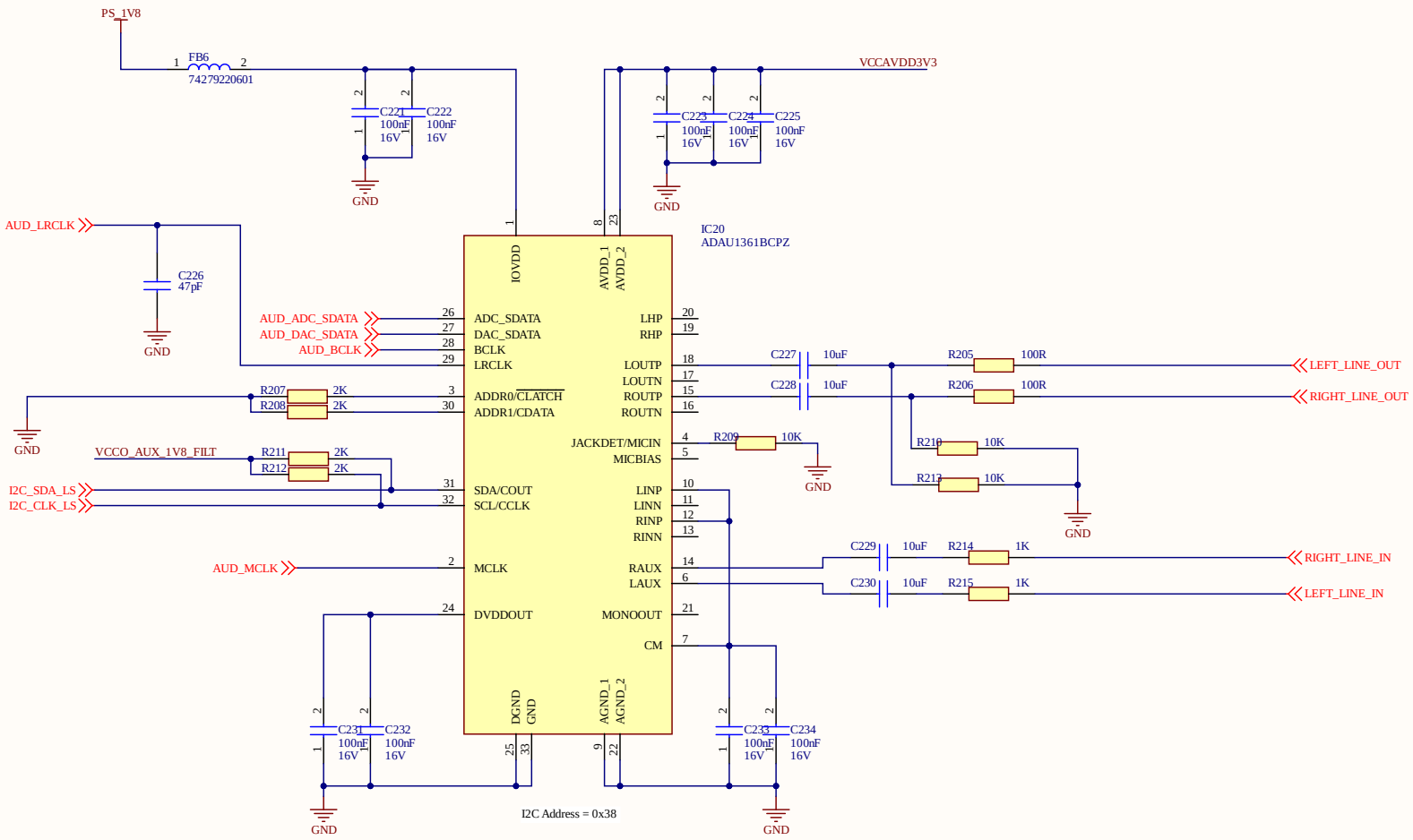

Title		
Size B	Number	Revision
Date: 2/19/2023	Sheet of	
File: C:\embedded_media\..\24 - Audio CODEC.SchDoc	Drawn By:	

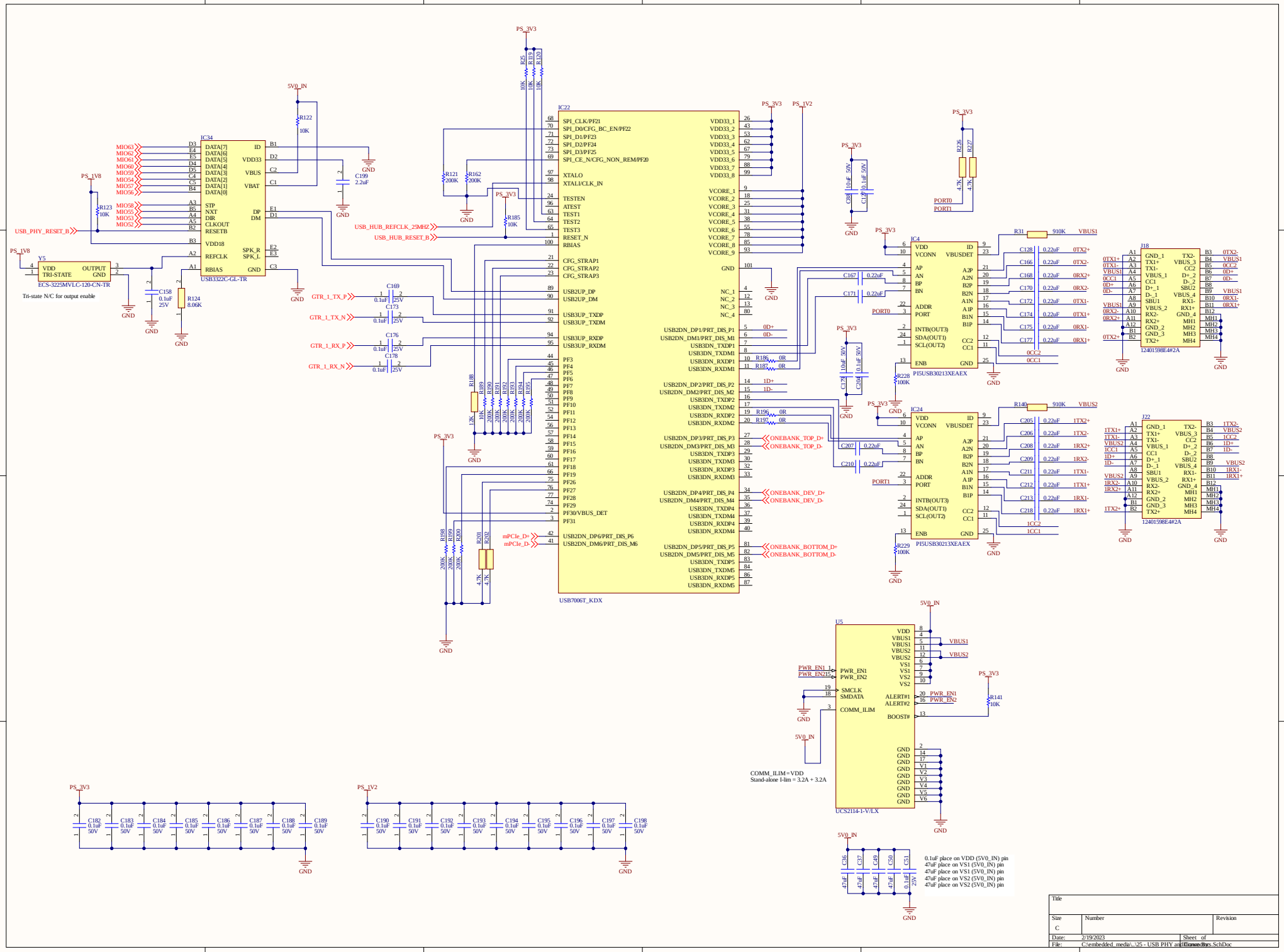
IC34
USB3322C-GL-TR
IC22
USB7006T_KDX
IC4
PI5USB30213XEAEX
IC24
PI5USB30213XEAEX
J18
12401598E4#2A
J22
12401598E4#2A
U5
UCS2114-1-V/LX
Y5
ECS-3225MVLC-120-CN-TR
Tri-state N/C for output enable
PS_3V3
PS_1V8
PS_1V2
5V0_IN
GND
USB_PHY_RESET_B
USB_HUB_REFCLK_25MHZ
USB_HUB_RESET_B
GTR_1_TX_P
GTR_1_TX_N
GTR_1_RX_P
GTR_1_RX_N
mPCIe_D+
mPCIe_D-
ONEBANK_TOP_D+
ONEBANK_TOP_D-
ONEBANK_DEV_D+
ONEBANK_DEV_D-
ONEBANK_BOTTOM_D+
ONEBANK_BOTTOM_D-
VBUS1
VBUS2
PORT0
PORT1
PWR_EN1
PWR_EN2
COMM_ILIM = VDD
Stand-alone I-lim = 3.2A + 3.2A
0.1uF place on VDD (5V0_IN) pin
47uF place on VS1 (5V0_IN) pin
47uF place on VS1 (5V0_IN) pin
47uF place on VS2 (5V0_IN) pin
47uF place on VS2 (5V0_IN) pin
Title
Size
C
Number
Revision
Date: 2/19/2023
Sheet of
File: C:\embedded_media\..\25 - USB PHY and Dock.SchDoc
Drawn By:

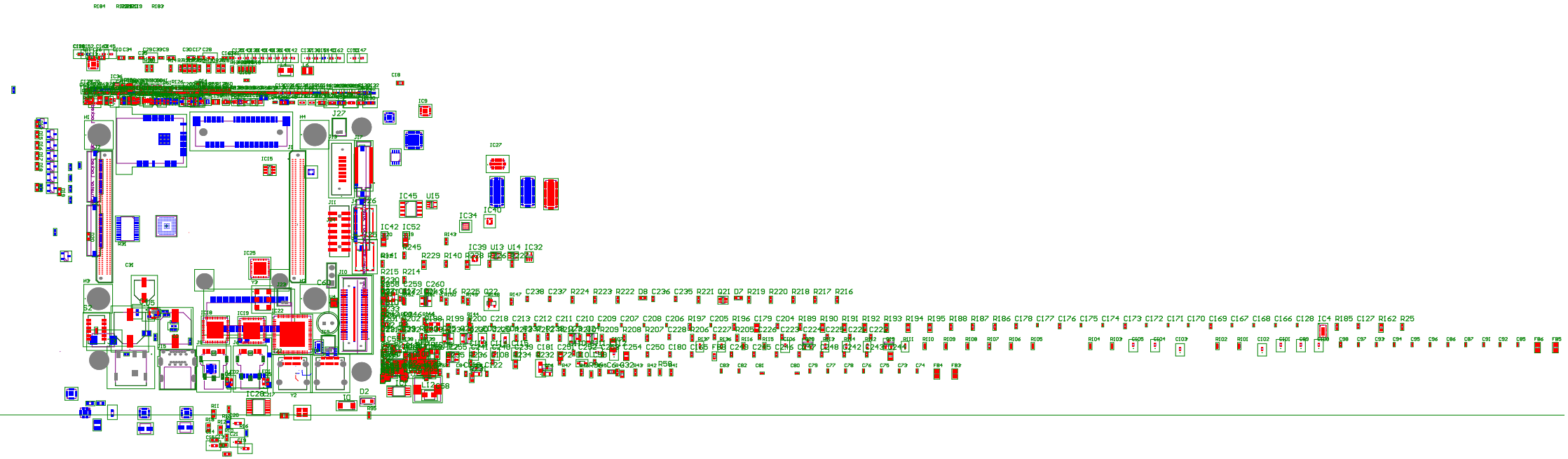

Board Stack Report