Title		
Size A4	Number	Revision
Date: 10/09/2022		Sheet of
File: C:\embedded_media\..\01 - Title Page.SchDoc		Drawn By:

Title		
Size A4	Number	Revision
Date: 10/09/2022	Sheet of	
File: C:\embedded_media\..\02 - Block Diagram.SchDoc	Drawn By:	

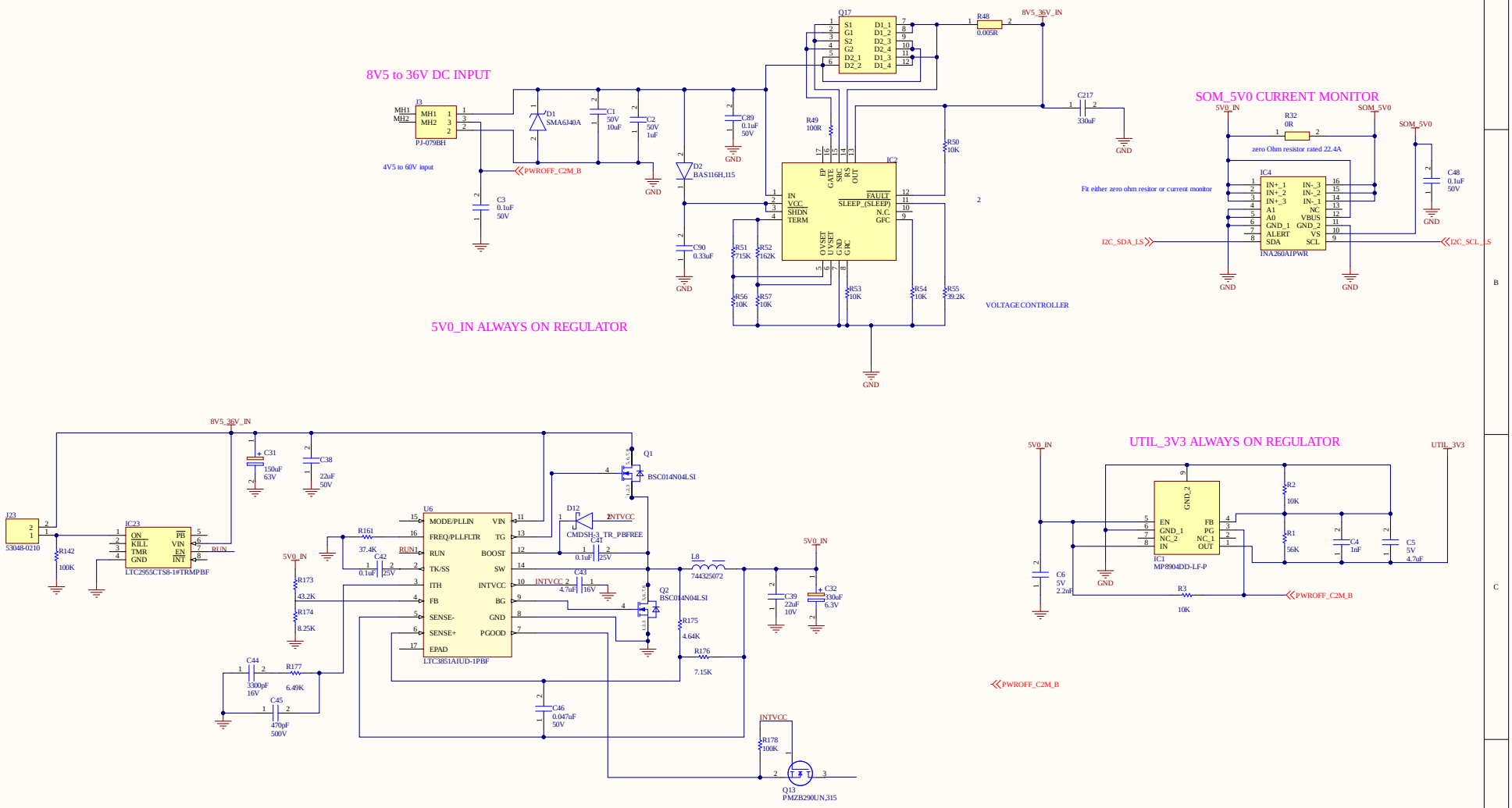

Title		
Size C	Number	Revision
Date: 10/09/2022	Sheet of	
File: C:\embedded_media\..\03 - Always On PwrSch.Drv	Drawn By:	

PS_1V2 REGULATOR

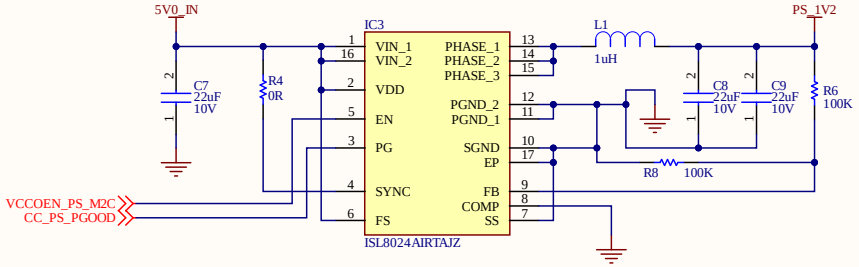

ETH_1V0 REGULATOR

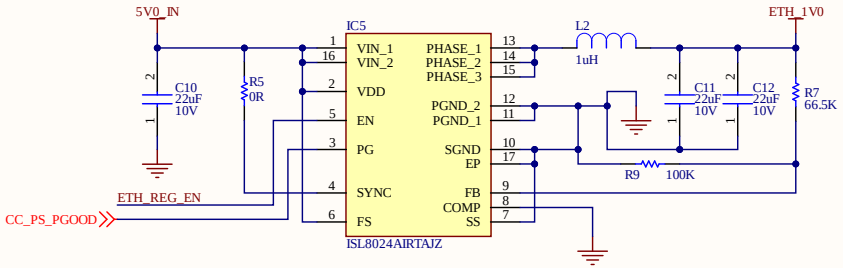

PS_1V8 REGULATOR

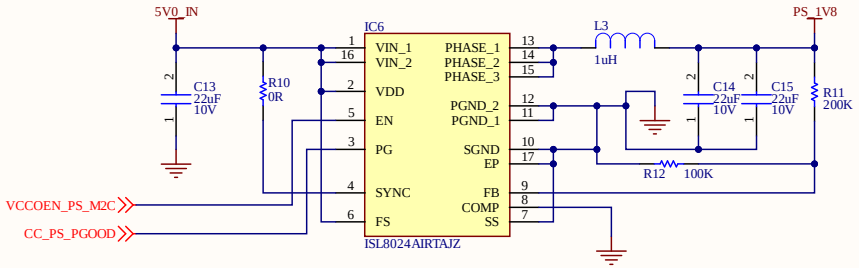

ETH_2V5 REGULATOR

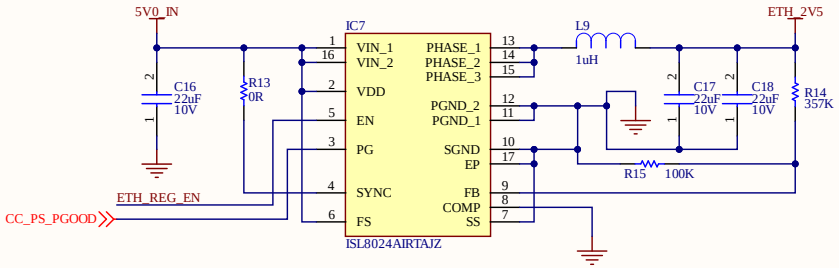

PS_3V3 REGULATOR

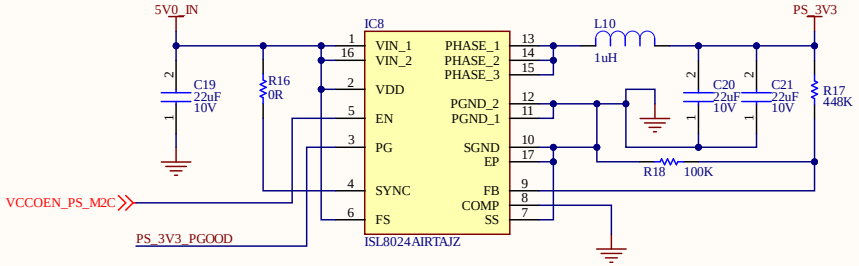

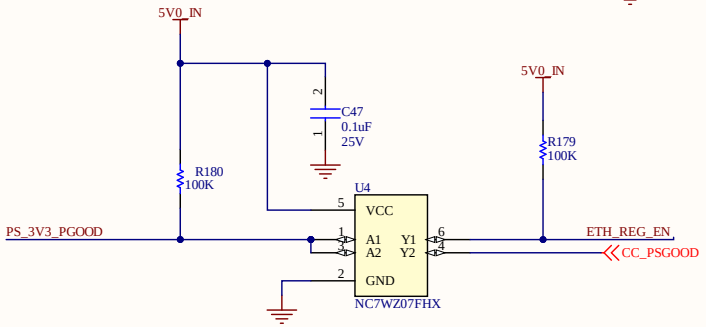

Title		
Size B	Number	Revision
Date: 10/09/2022	Sheet of	
File: C:\embedded_media\..\04 - PS Power.SchDoc	Drawn By:	

PL_1V2 REGULATOR

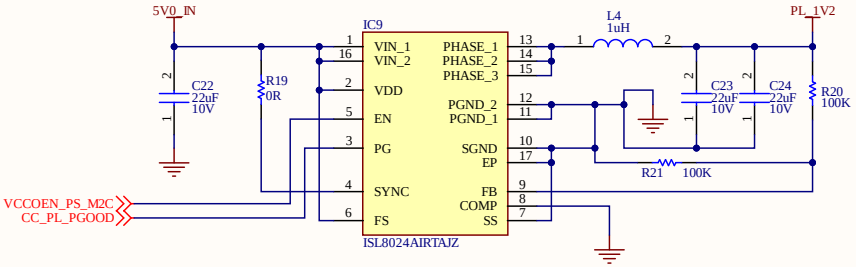

PL_1V8 REGULATOR

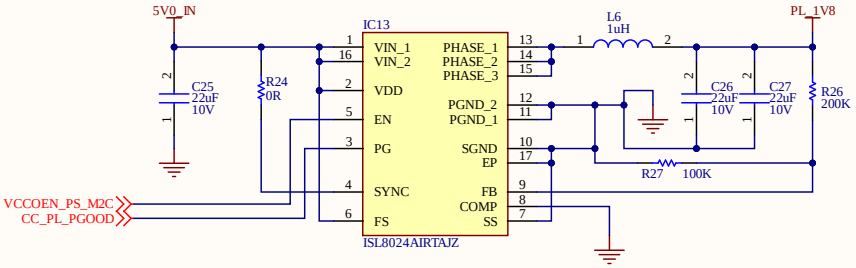

P_3V3 REGULATOR

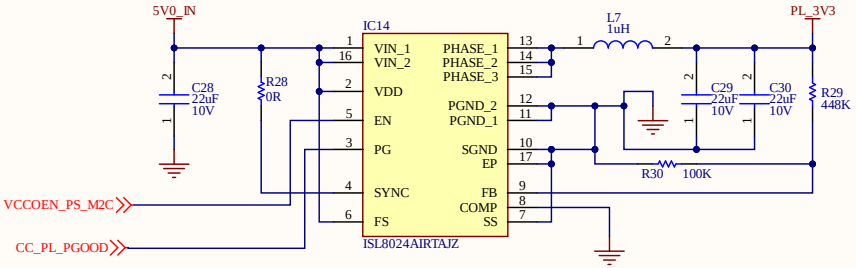

IAS_2V75 REGULATOR

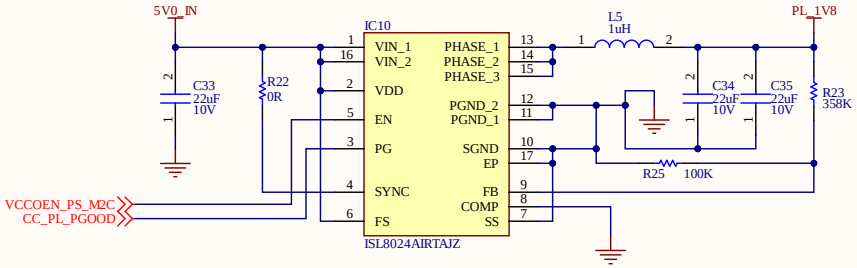

Title		
Size B	Number	Revision
Date: 10/09/2022		Sheet of
File: C:\embedded_media\..\05 - PL Power.SchDoc		Drawn By:

SOM240_2

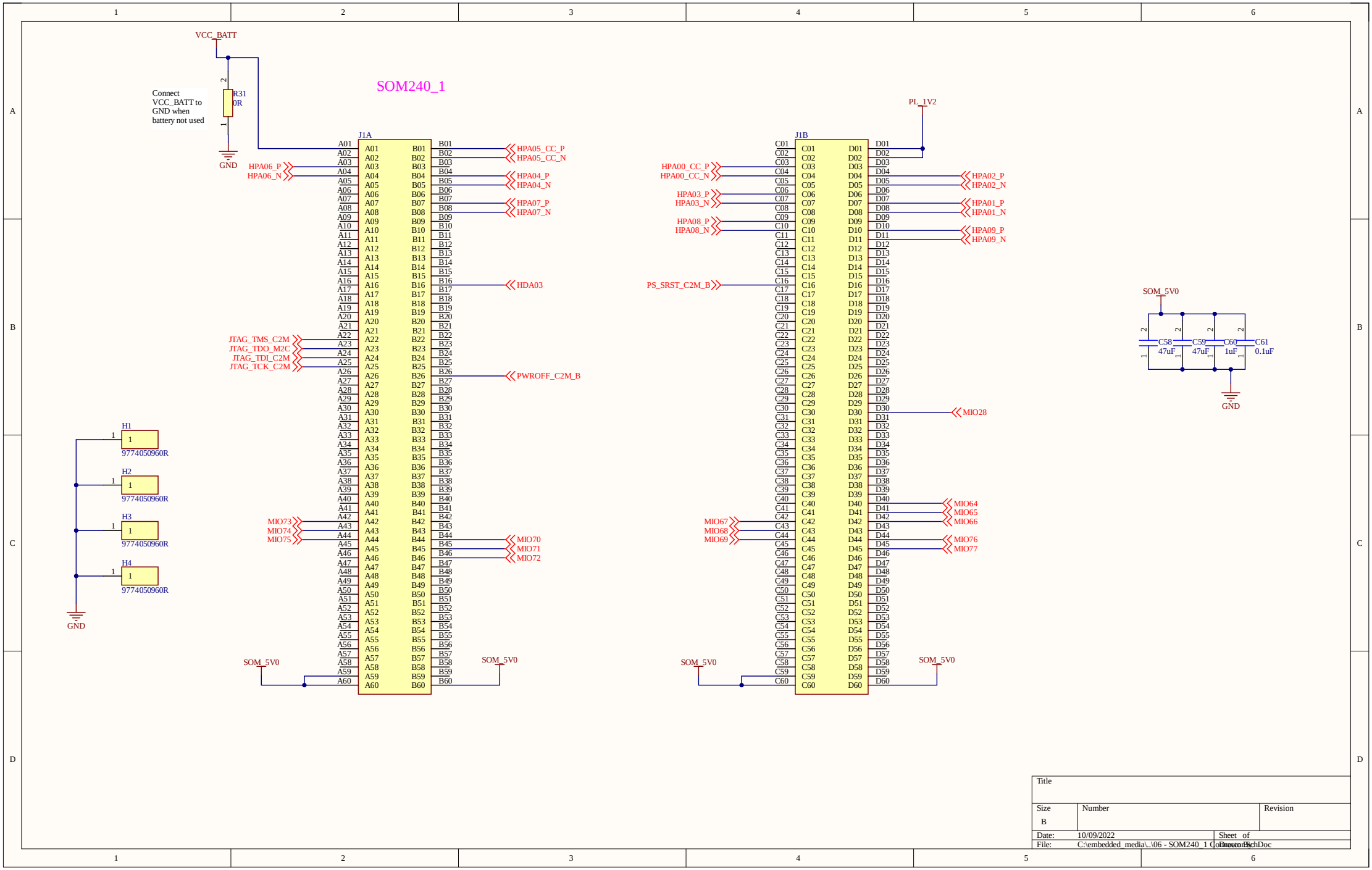
SOM240_1
VCC_BATT
Connect VCC_BATT to GND when battery not used
R31
0R
GND
J1A
J1B
HPA06_P
HPA06_N
HPA05_CC_P
HPA05_CC_N
HPA04_P
HPA04_N
HPA07_P
HPA07_N
HDA03
JTAG_TMS_C2M
JTAG_TDO_M2C
JTAG_TDI_C2M
JTAG_TCK_C2M
PWROFF_C2M_B
MIO73
MIO74
MIO75
MIO70
MIO71
MIO72
SOM_5V0
PL_1V2
HPA00_CC_P
HPA00_CC_N
HPA03_P
HPA03_N
HPA08_P
HPA08_N
PS_SRST_C2M_B
HPA02_P
HPA02_N
HPA01_P
HPA01_N
HPA09_P
HPA09_N
MIO28
MIO67
MIO68
MIO69
MIO64
MIO65
MIO66
MIO76
MIO77
H1
H2
H3
H4
9774050960R
C58
47uF
C59
47uF
C60
1uF
C61
0.1uF
Title
Size
B
Number
Revision
Date: 10/09/2022
Sheet of
File: C:\embedded_media\..\06 - SOM240_1 Connectors.SchDoc
Drawn By:

SOM240_2

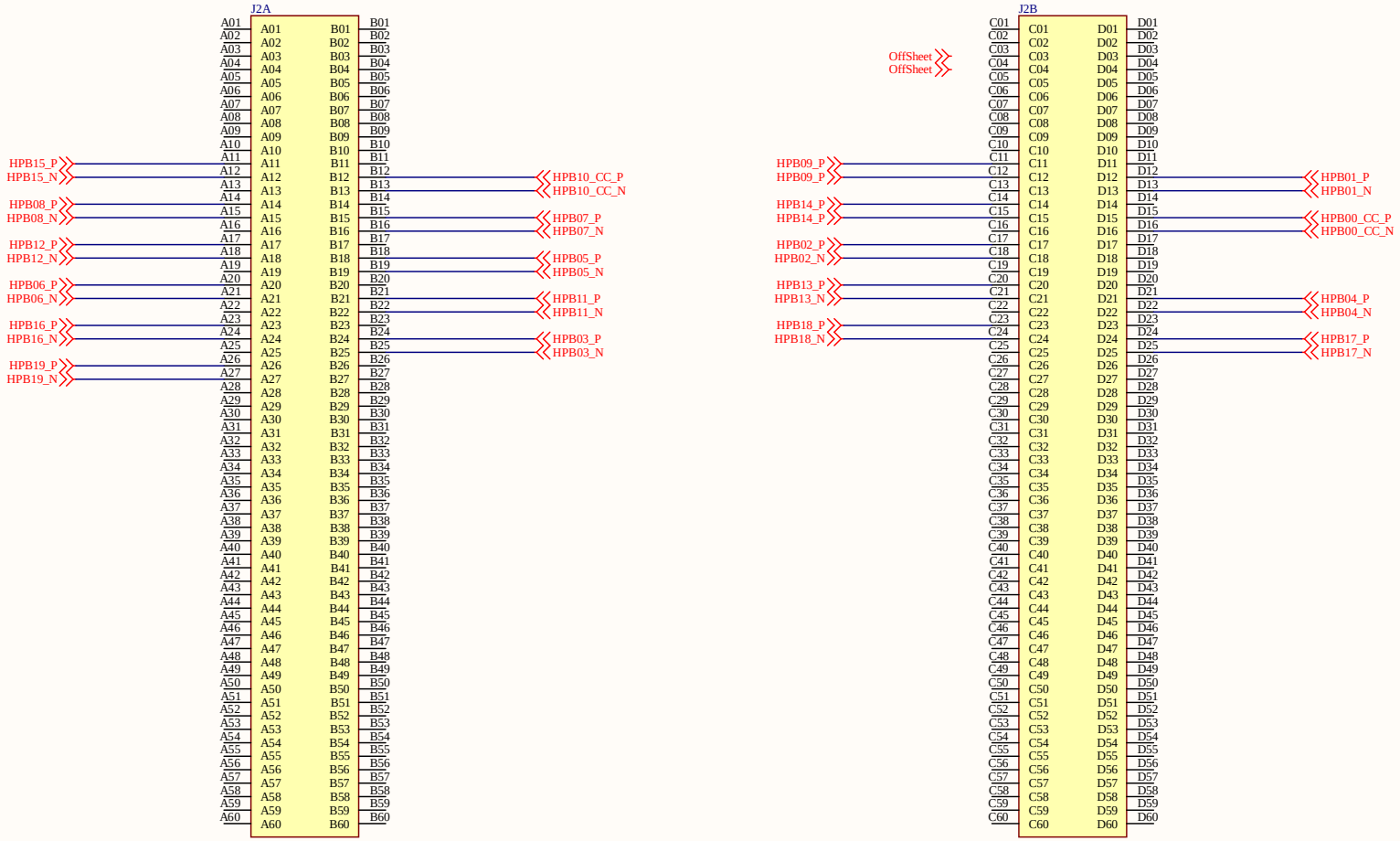

Title		
Size B	Number	Revision
Date: 10/09/2022	Sheet of	
File: C:\embedded_media\..\07 - SOM240_2 Connector.SchDoc	Drawn By:	

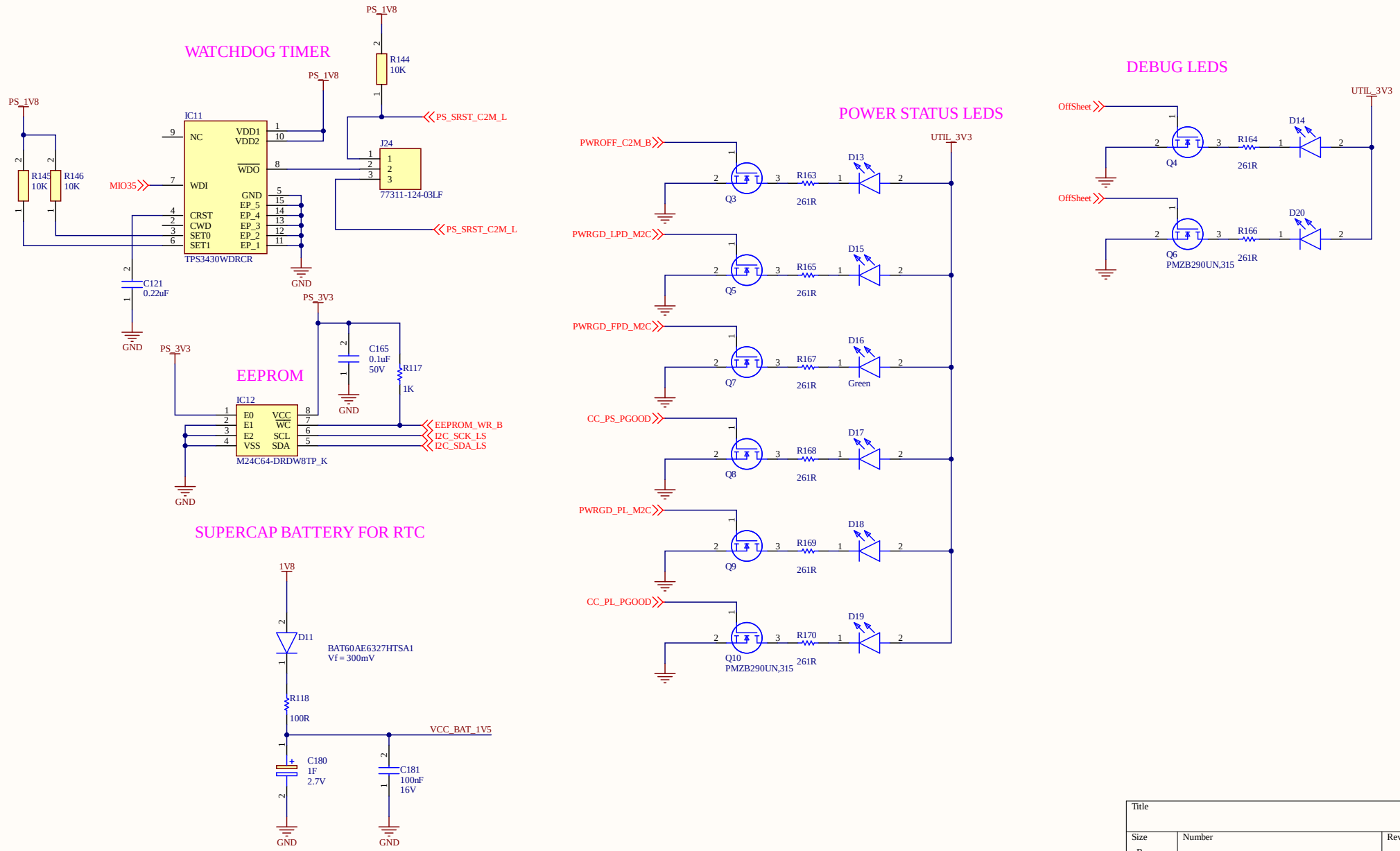

Title		
Size B	Number	Revision
Date: 10/09/2022	Sheet of	
File: C:\embedded_media\..\08 - EEPROM, RTC, WD, LEDs.SchDoc	Drawn By:	

100MHz CLOCK GENERATOR

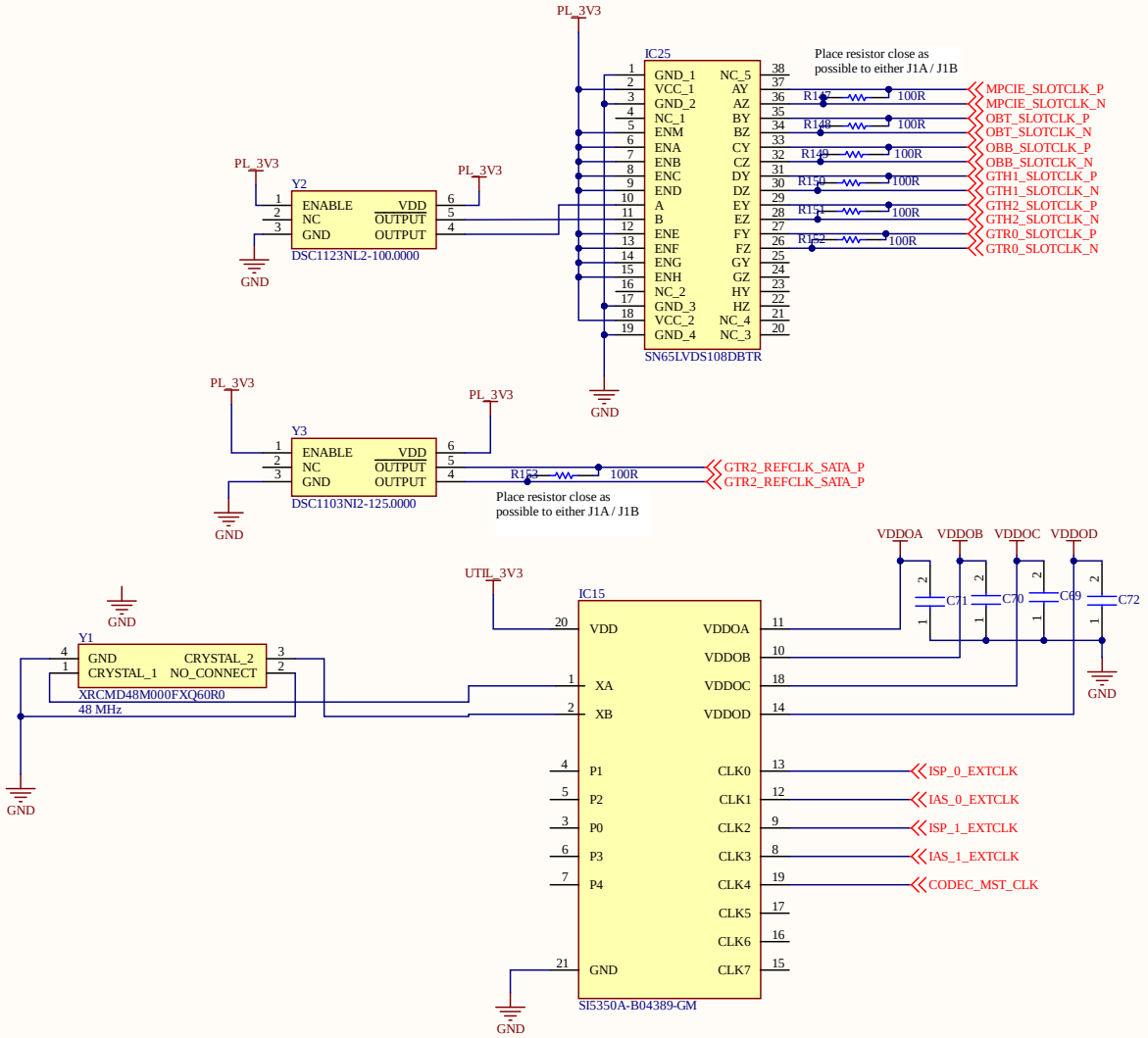

Title		
Size B	Number	Revision
Date: 10/09/2022		Sheet of
File: C:\embedded_media\..\09 - Clock gen.SchDoc		Drawn By:

FTDI JTAG/UART

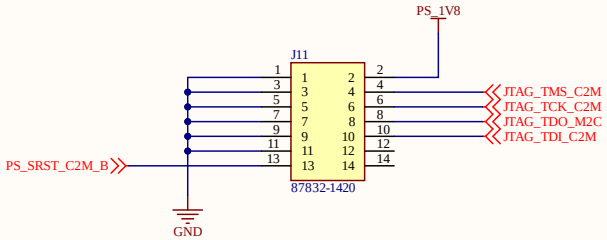

Title		
Size B	Number	Revision
Date: 10/09/2022	Sheet of	
File: C:\embedded_media\..\10 - JTAG UART.SchDoc	Drawn By:	

Display Port

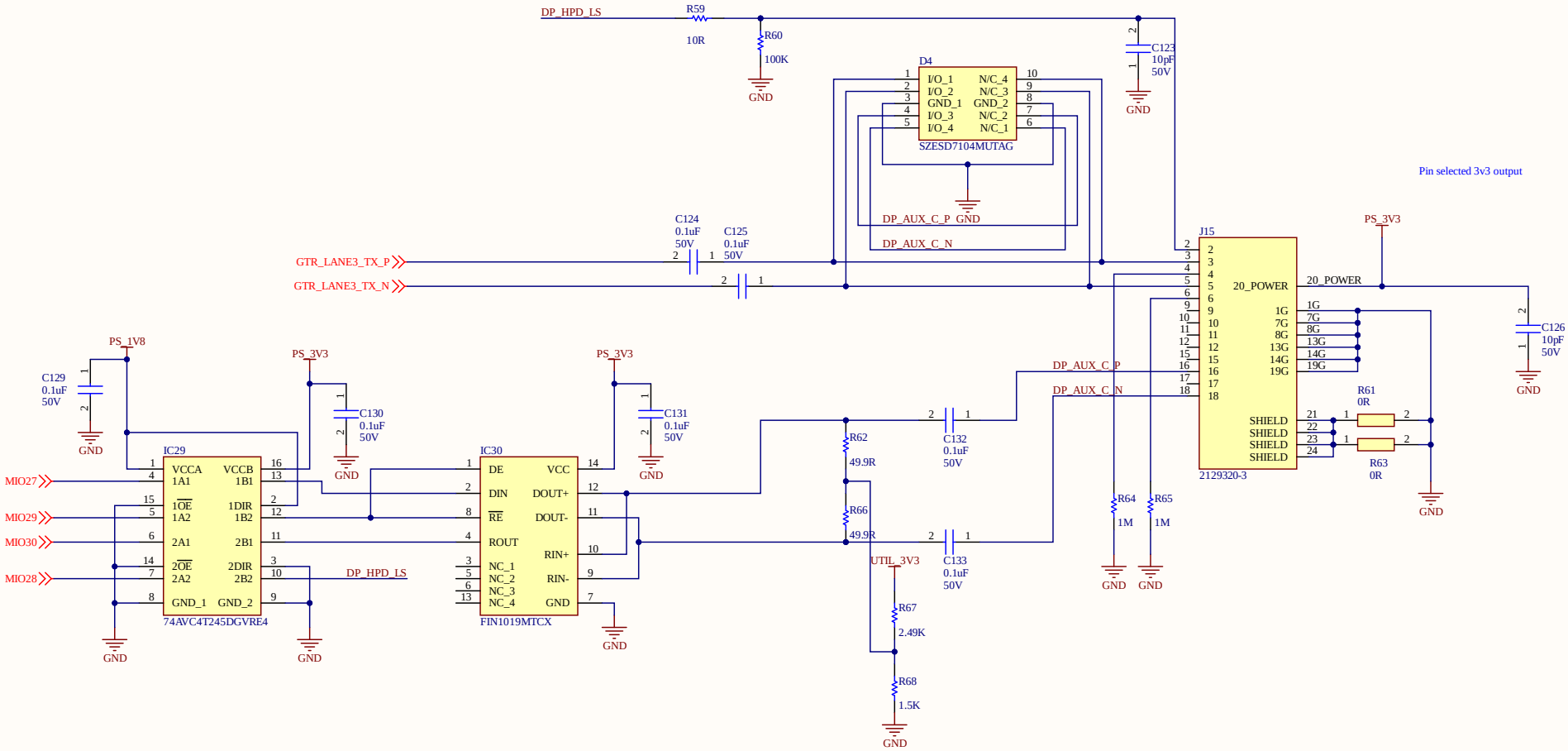

Title		
Size B	Number	Revision
Date: 10/09/2022	Sheet of	
File: C:\embedded_media\..\11 - Display Port.SchDoc	Drawn By:	

Camera MIPI connectors

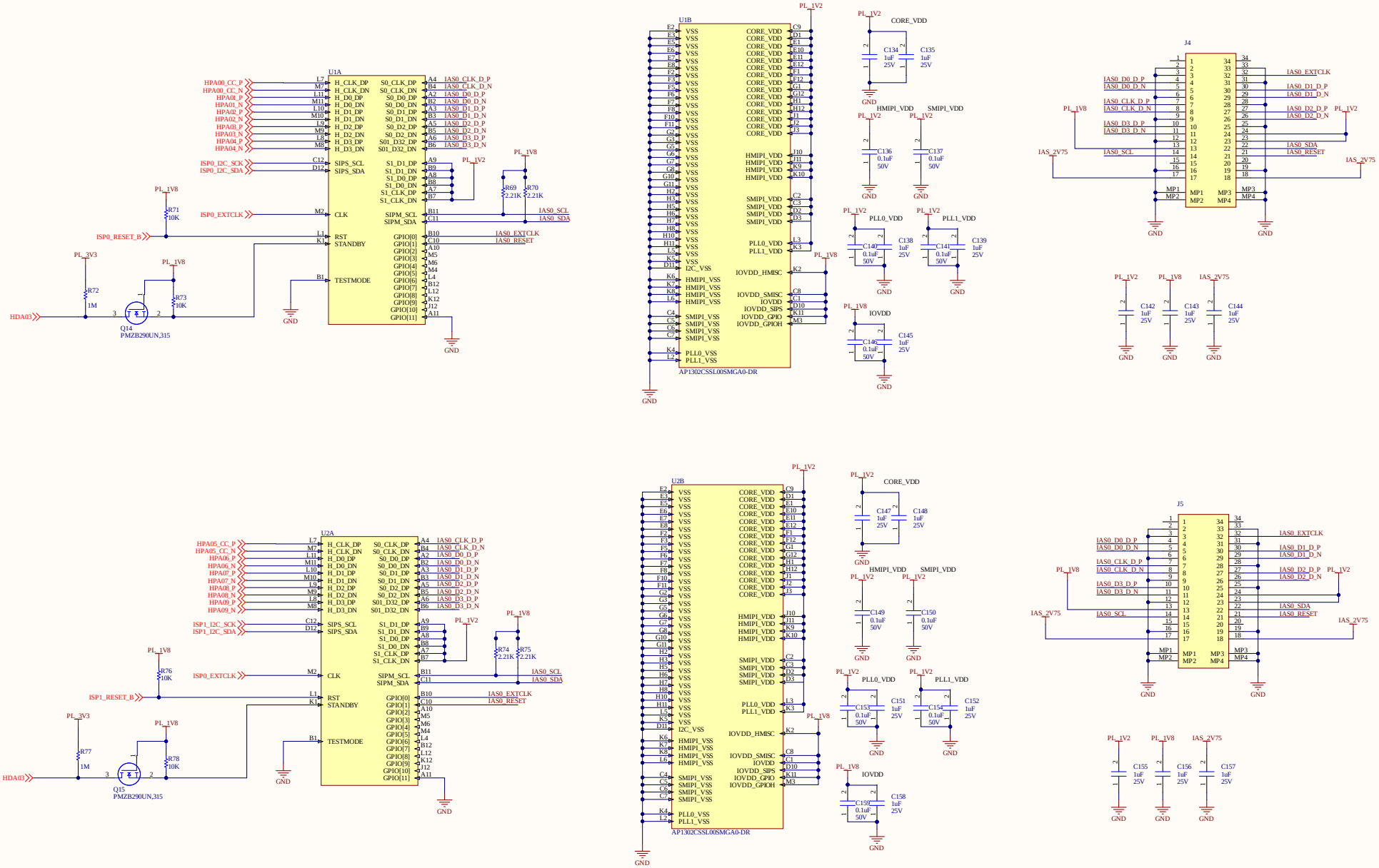

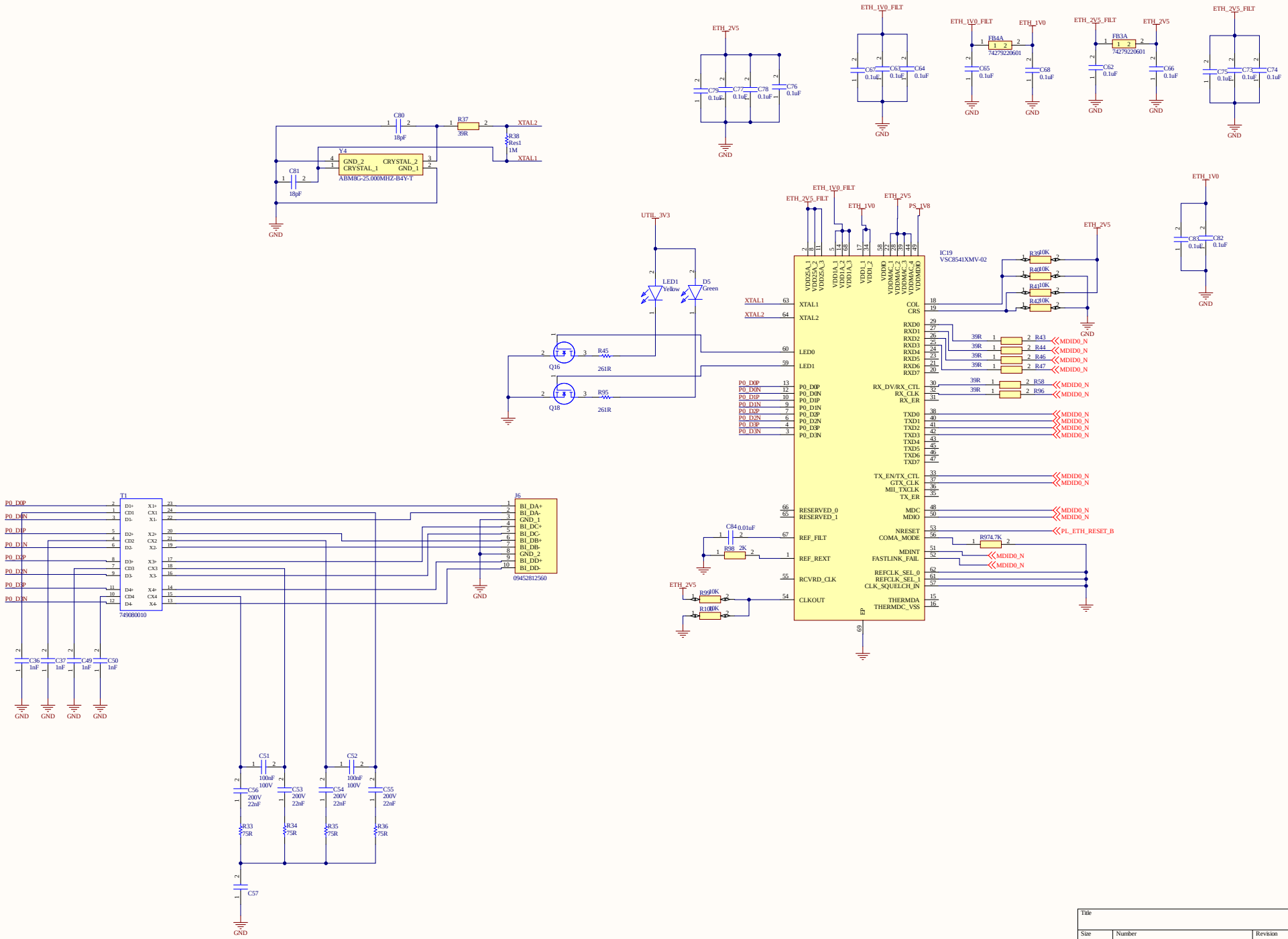

Title		
Size C	Number	Revision
Date: 10/09/2022	Sheet of	
File: C:\embedded_media\..\13 - PL Ethernet.SchDoc	Drawn By:	

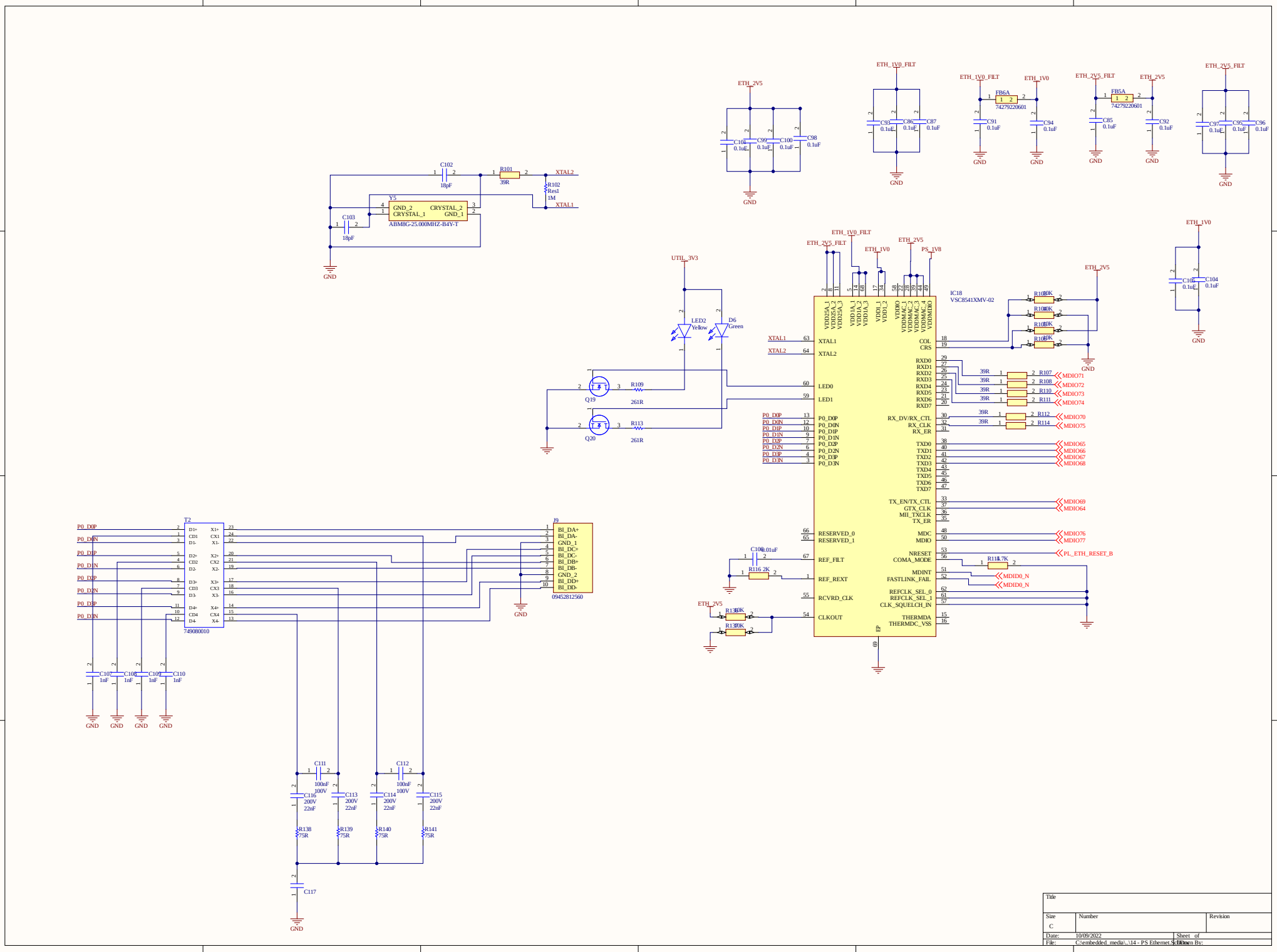

Title		
Size C	Number	Revision
Date: 10/09/2022	Sheet of	
File: C:\embedded_media\...\14 - PS Ethernet.SchDoc	Drawn By:	

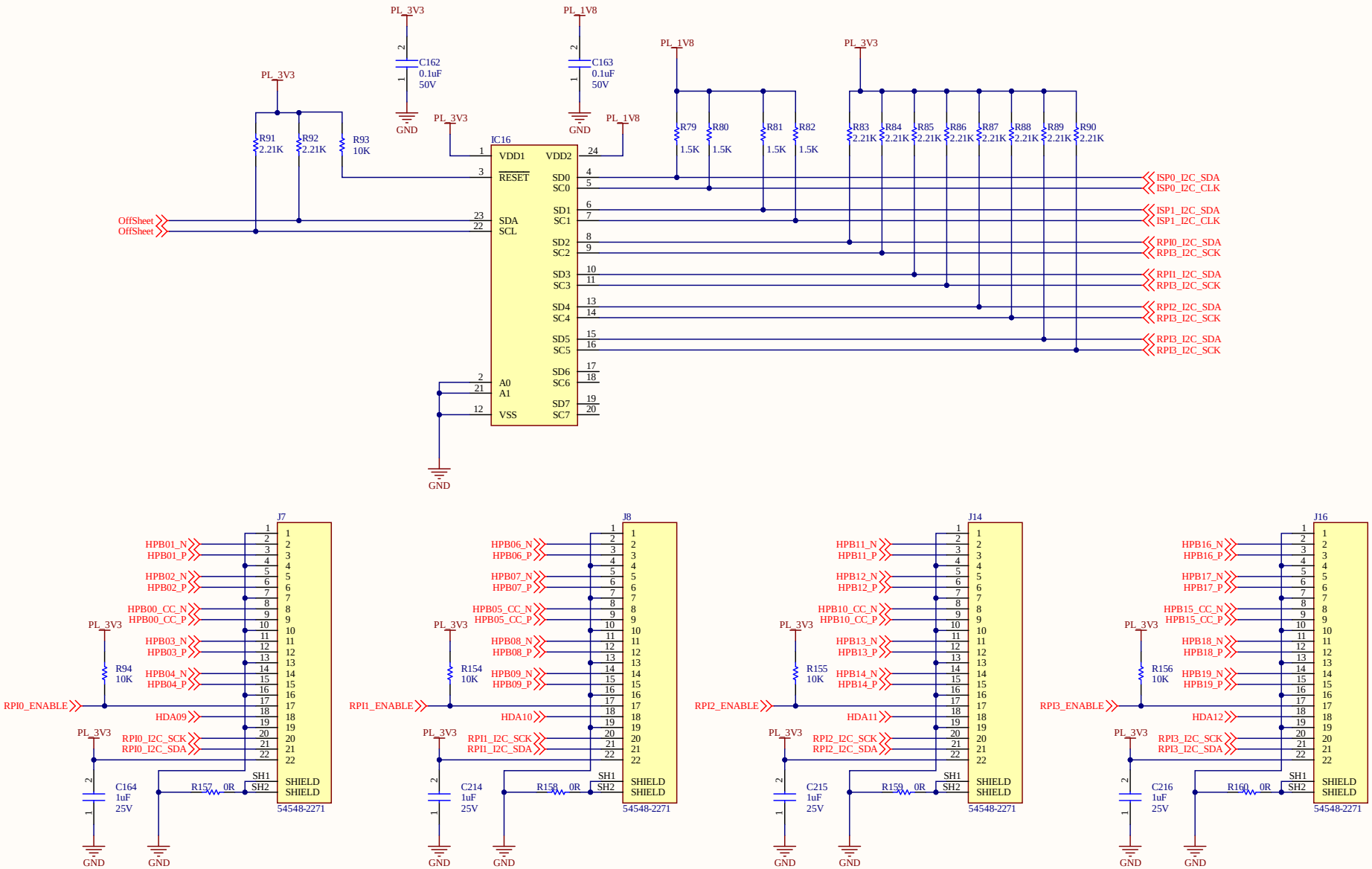

Title		
Size B	Number	Revision
Date: 10/09/2022		Sheet of
File: C:\embedded_media\..\16 - RPi Camera Connector.SchDoc		Drawn By:

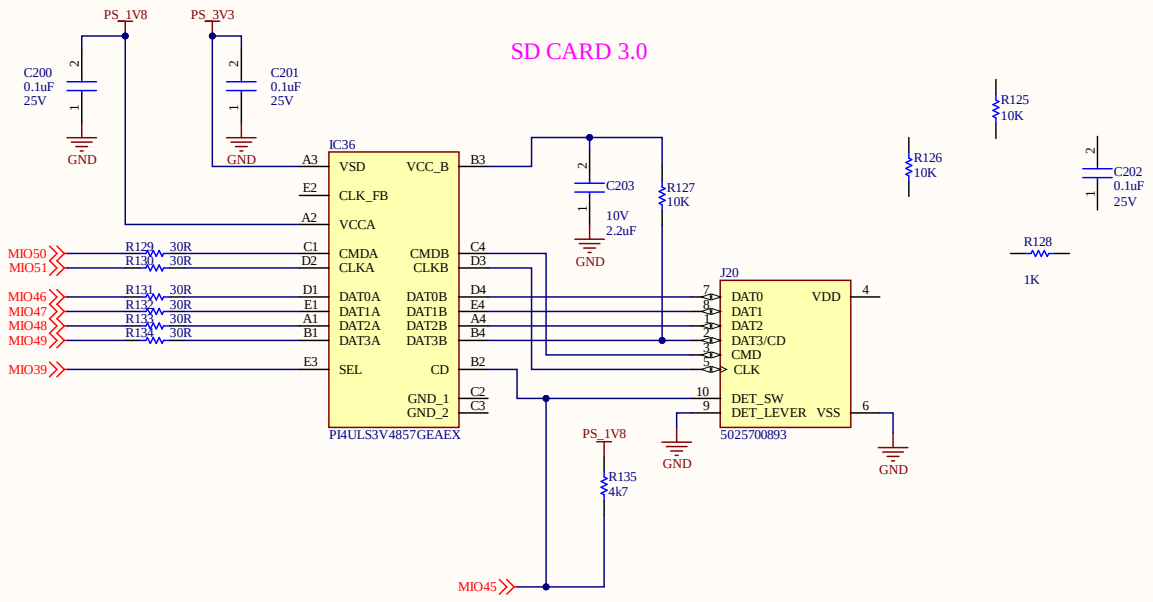

Title		
Size B	Number	Revision
Date: 10/09/2022	Sheet of	
File: C:\embedded_media\..\16 - SD Card, PMOD.SchDoc	Drawn By:	

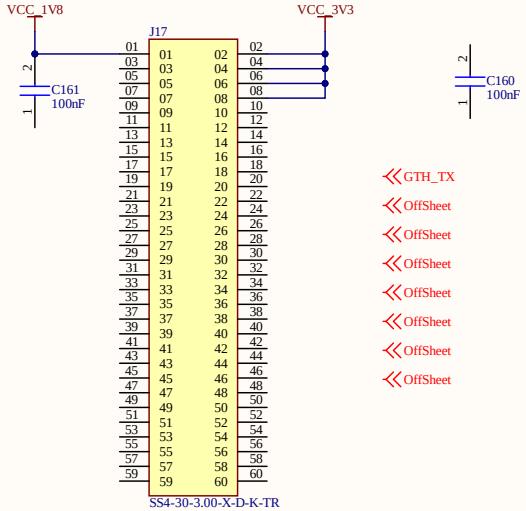

Title		
Size B	Number	Revision
Date: 10/09/2022	Sheet of	
File: C:\embedded_media\..\17 - Samtec 30 pin .SchDoc	Drawn By:	

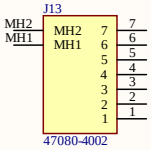

Title			
Size B	Number		Revision
Date: 10/09/2022		Sheet of	
File: C:\embedded_media\..\18 - SATA Connector.SchDoc		Drawn By:	

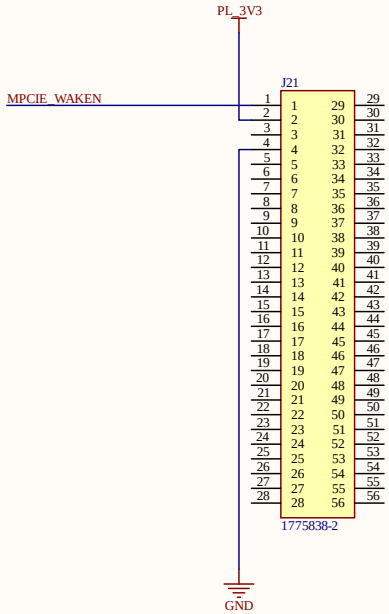

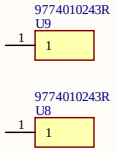

Title		
Size B	Number	Revision
Date: 10/09/2022	Sheet of	
File: C:\embedded_media\..\19 - mPCIe.SchDoc	Drawn By:	

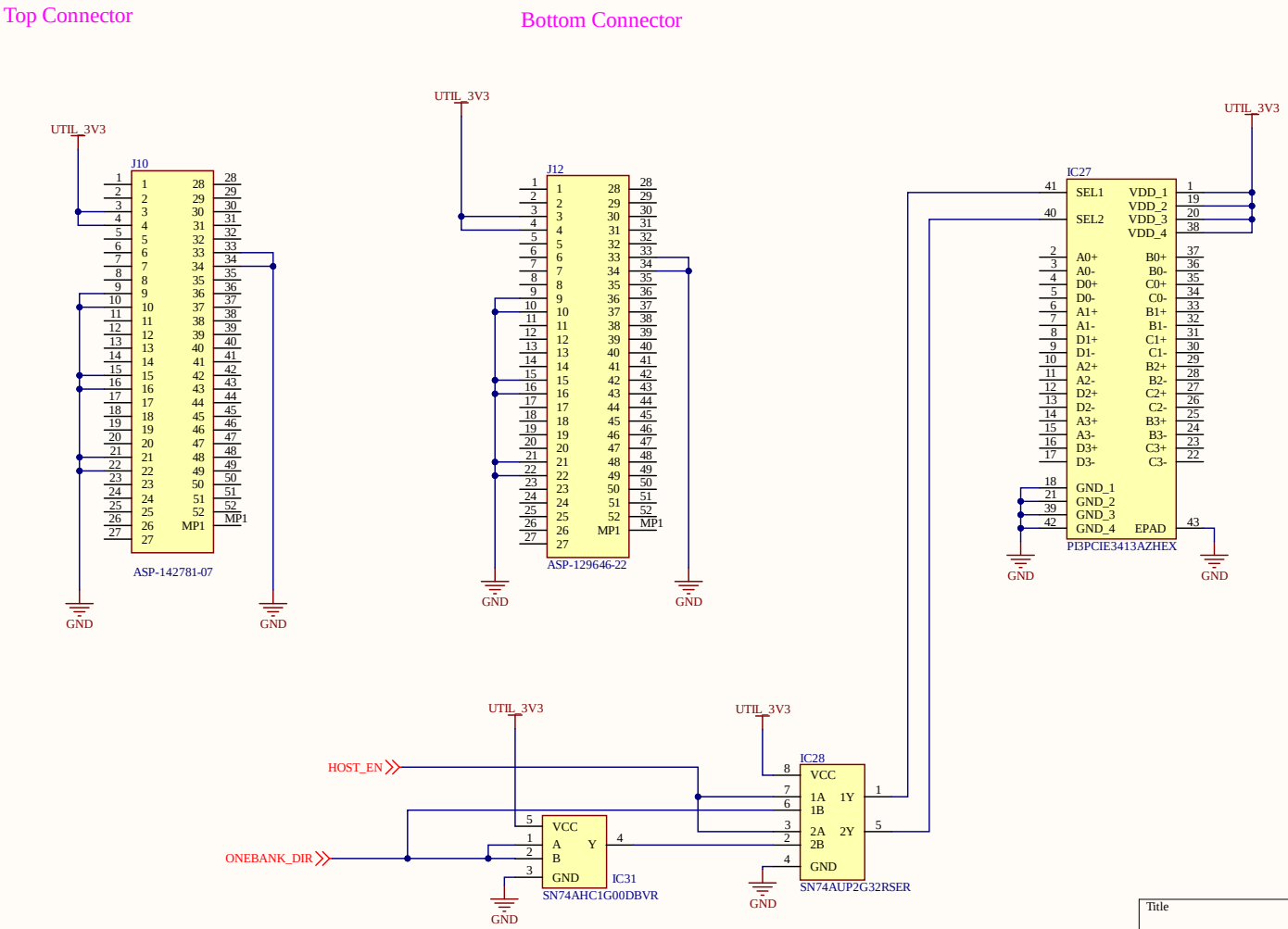

Title		
Size B	Number	Revision
Date: 10/09/2022		Sheet of
File: C:\embedded_media\..\20 - OneBank Connector.SchDoc		Drawn By:

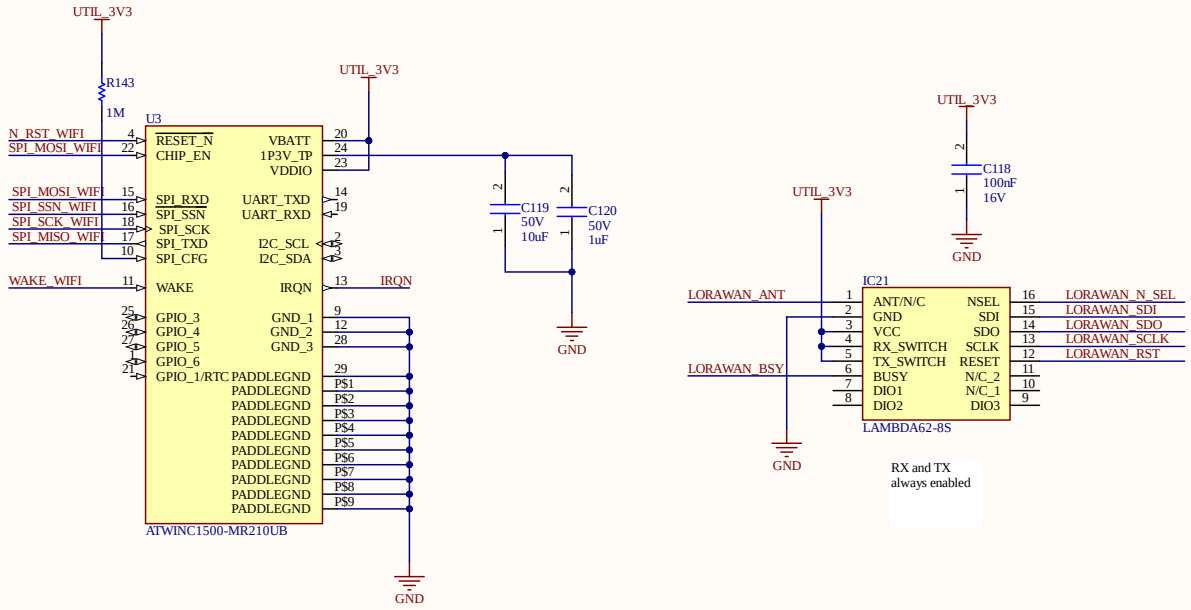

Title		
Size B	Number	Revision
Date: 10/09/2022	Sheet of	
File: C:\embedded_media\..\21 - LoraWan & WiFi.SchDoc	Drawn By:	

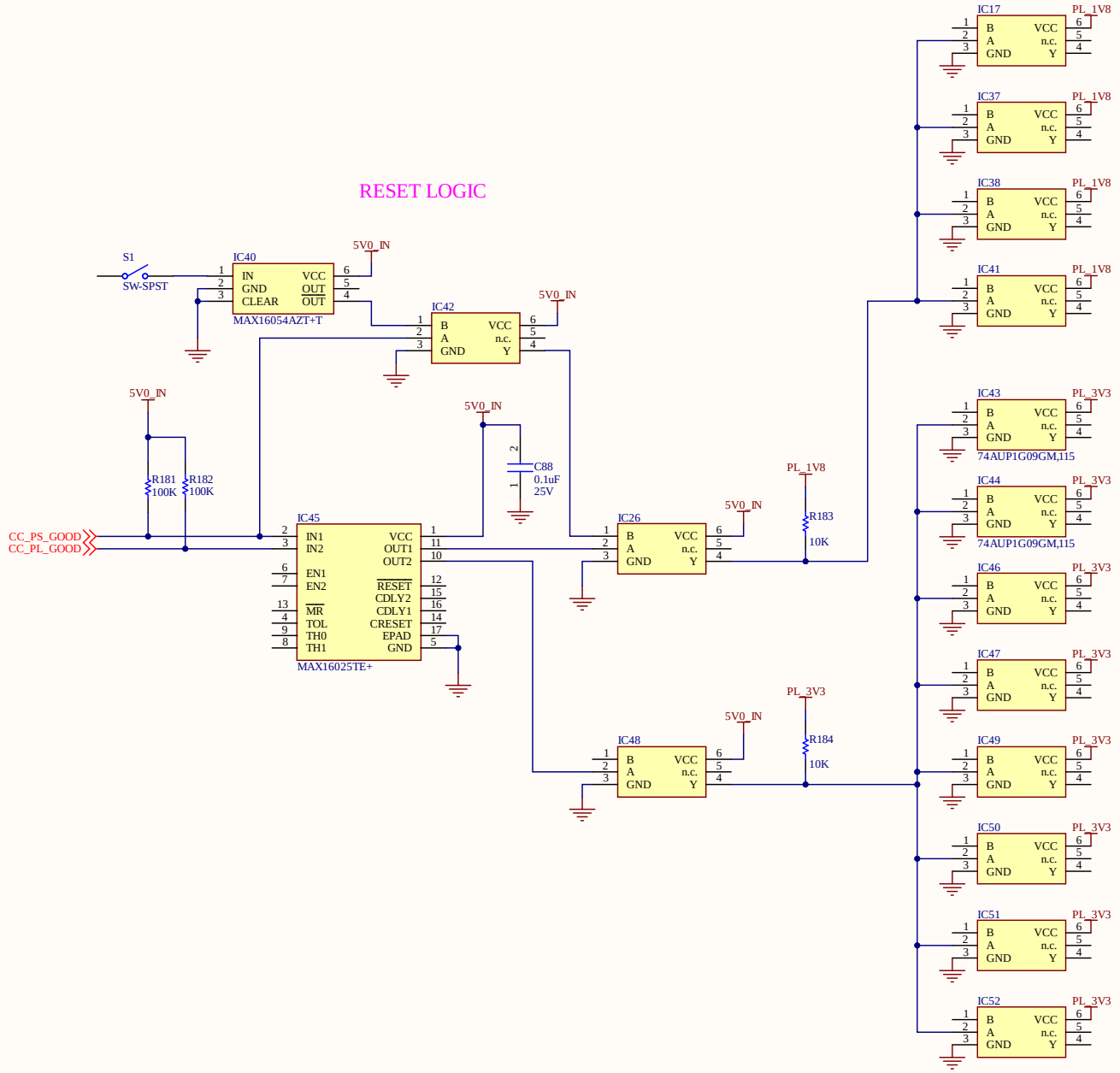

Title		
Size B	Number	Revision
Date: 10/09/2022	Sheet of	
File: C:\embedded_media\..\22 - Reset Logic.SchDoc	Drawn By:	

12V FAN HEADER

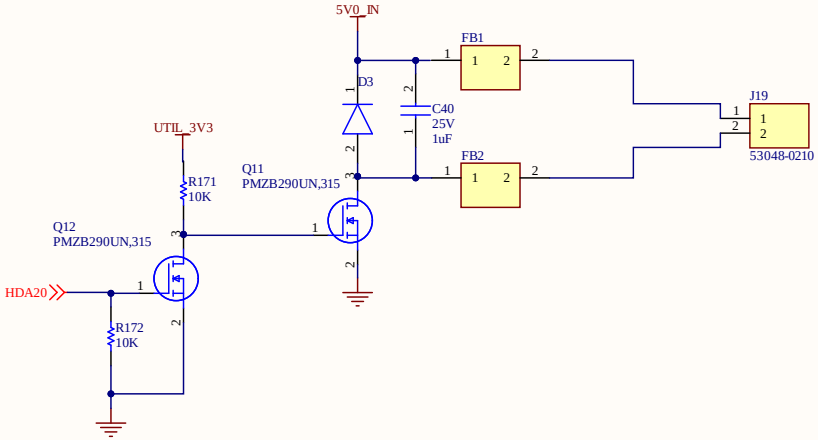

Title		
Size B	Number	Revision
Date: 10/09/2022		Sheet of
File: C:\embedded_media\..\23 - Fan.SchDoc		Drawn By:

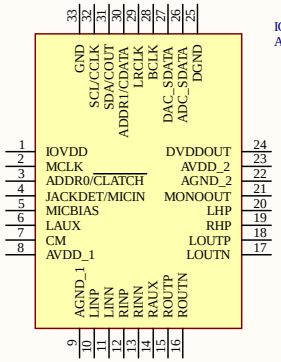

Title			
Size B	Number		Revision
Date: 10/09/2022		Sheet of	
File: C:\embedded_media\..\24 - Audio CODEC.SchDoc		Drawn By:	

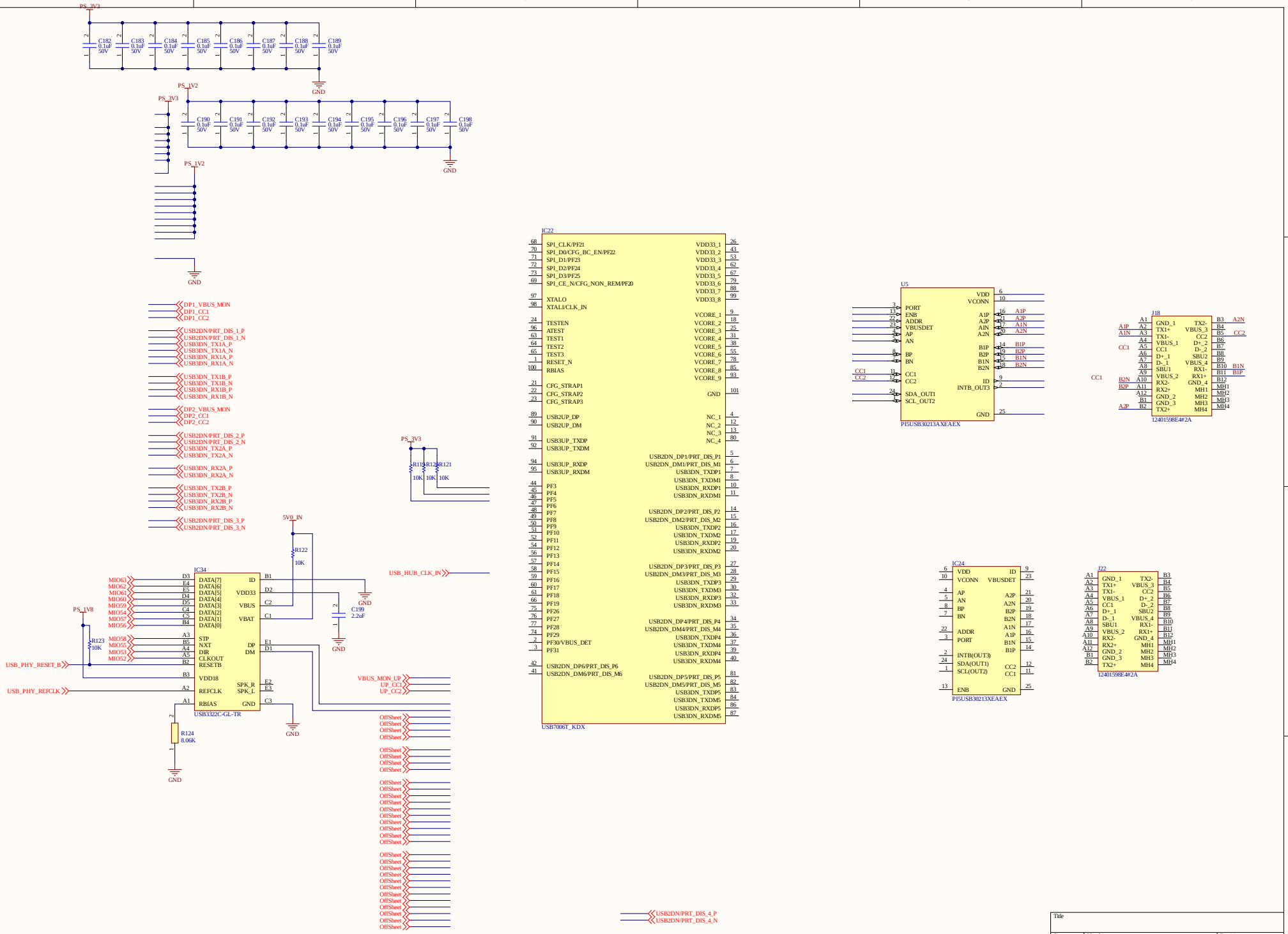
PS_3V3
C182 0.1uF 50V
C183 0.1uF 50V
C184 0.1uF 50V
C185 0.1uF 50V
C186 0.1uF 50V
C187 0.1uF 50V
C188 0.1uF 50V
C189 0.1uF 50V
GND
PS_1V2
PS_3V3
C190 0.1uF 50V
C191 0.1uF 50V
C192 0.1uF 50V
C193 0.1uF 50V
C194 0.1uF 50V
C195 0.1uF 50V
C196 0.1uF 50V
C197 0.1uF 50V
C198 0.1uF 50V
PS_1V2
GND
DP1_VBUS_MON
DP1_CC1
DP1_CC2
USB2DN/PRT_DIS_1_P
USB2DN/PRT_DIS_1_N
USB3DN_TX1A_P
USB3DN_TX1A_N
USB3DN_RX1A_P
USB3DN_RX1A_N
USB3DN_TX1B_P
USB3DN_TX1B_N
USB3DN_RX1B_P
USB3DN_RX1B_N
DP2_VBUS_MON
DP2_CC1
DP2_CC2
USB2DN/PRT_DIS_2_P
USB2DN/PRT_DIS_2_N
USB3DN_TX2A_P
USB3DN_TX2A_N
USB3DN_RX2A_P
USB3DN_RX2A_N
USB3DN_TX2B_P
USB3DN_TX2B_N
USB3DN_RX2B_P
USB3DN_RX2B_N
USB2DN/PRT_DIS_3_P
USB2DN/PRT_DIS_3_N
PS_3V3
R119 10K
R120 10K
R121 10K
5V0_IN
R122 10K
IC34
MIO63
MIO62
MIO61
MIO60
MIO59
MIO54
MIO57
MIO56
MIO58
MIO55
MIO53
MIO52
PS_1V8
R123 10K
USB_PHY_RESET_B
USB_PHY_REFCLK
DATA[7]
DATA[6]
DATA[5]
DATA[4]
DATA[3]
DATA[2]
DATA[1]
DATA[0]
STP
NXT
DIR
CLKOUT
RESETB
VDD18
REFCLK
RBIAS
ID
VDD33
VBUS
VBAT
DP
DM
SPK_R
SPK_L
GND
USB3322C-GL-TR
C199 2.2uF
GND
R124 8.06K
GND
USB_HUB_CLK_IN
VBUS_MON_UP
UP_CC1
UP_CC2
OffSheet
IC22
SPI_CLK/PF21
SPI_D0/CFG_BC_EN/PF22
SPI_D1/PF23
SPI_D2/PF24
SPI_D3/PF25
SPI_CE_N/CFG_NON_REM/PF20
XTALO
XTALI/CLK_IN
TESTEN
ATEST
TEST1
TEST2
TEST3
RESET_N
RBIAS
CFG_STRAP1
CFG_STRAP2
CFG_STRAP3
USB2UP_DP
USB2UP_DM
USB3UP_TXDP
USB3UP_TXDM
USB3UP_RXDP
USB3UP_RXDM
PF3
PF4
PF5
PF6
PF7
PF8
PF9
PF10
PF11
PF12
PF13
PF14
PF15
PF16
PF17
PF18
PF19
PF26
PF27
PF28
PF29
PF30/VBUS_DET
PF31
USB2DN_DP6/PRT_DIS_P6
USB2DN_DM6/PRT_DIS_M6
VDD33_1
VDD33_2
VDD33_3
VDD33_4
VDD33_5
VDD33_6
VDD33_7
VDD33_8
VCORE_1
VCORE_2
VCORE_3
VCORE_4
VCORE_5
VCORE_6
VCORE_7
VCORE_8
VCORE_9
GND
NC_1
NC_2
NC_3
NC_4
USB2DN_DP1/PRT_DIS_P1
USB2DN_DM1/PRT_DIS_M1
USB3DN_TXDP1
USB3DN_TXDM1
USB3DN_RXDP1
USB3DN_RXDM1
USB2DN_DP2/PRT_DIS_P2
USB2DN_DM2/PRT_DIS_M2
USB3DN_TXDP2
USB3DN_TXDM2
USB3DN_RXDP2
USB3DN_RXDM2
USB2DN_DP3/PRT_DIS_P3
USB2DN_DM3/PRT_DIS_M3
USB3DN_TXDP3
USB3DN_TXDM3
USB3DN_RXDP3
USB3DN_RXDM3
USB2DN_DP4/PRT_DIS_P4
USB2DN_DM4/PRT_DIS_M4
USB3DN_TXDP4
USB3DN_TXDM4
USB3DN_RXDP4
USB3DN_RXDM4
USB2DN_DP5/PRT_DIS_P5
USB2DN_DM5/PRT_DIS_M5
USB3DN_TXDP5
USB3DN_TXDM5
USB3DN_RXDP5
USB3DN_RXDM5
USB7006T_KDX
USB2DN/PRT_DIS_4_P
USB2DN/PRT_DIS_4_N
U5
PORT
ENB
ADDR
VBUSDET
AP
AN
BP
BN
CC1
CC2
SDA_OUT1
SCL_OUT2
VDD
VCONN
A1P
A2P
A1N
A2N
B1P
B2P
B1N
B2N
ID
INTB_OUT3
GND
PI5USB30213AXEAEX
J18
GND_1
TX1+
TX1-
VBUS_1
CC1
D+_1
D-_1
SBU1
VBUS_2
RX2-
RX2+
GND_2
GND_3
TX2+
TX2-
VBUS_3
CC2
D+_2
D-_2
SBU2
VBUS_4
RX1-
RX1+
GND_4
MH1
MH2
MH3
MH4
12401598E4#2A
IC24
VDD
VCONN
AP
AN
BP
BN
ADDR
PORT
INTB(OUT3)
SDA(OUT1)
SCL(OUT2)
ENB
ID
VBUSDET
A2P
A2N
B2P
B2N
A1N
A1P
B1N
B1P
CC2
CC1
GND
PI5USB30213XEAEX
J22
GND_1
TX1+
TX1-
VBUS_1
CC1
D+_1
D-_1
SBU1
VBUS_2
RX2-
RX2+
GND_2
GND_3
TX2+
TX2-
VBUS_3
CC2
D+_2
D-_2
SBU2
VBUS_4
RX1-
RX1+
GND_4
MH1
MH2
MH3
MH4
12401598E4#2A
Title
Size
C
Number
Revision
Date: 10/09/2022
Sheet of
File: C:\embedded_media\..\25 - USB PHY and IO.SchDoc
Drawn By:

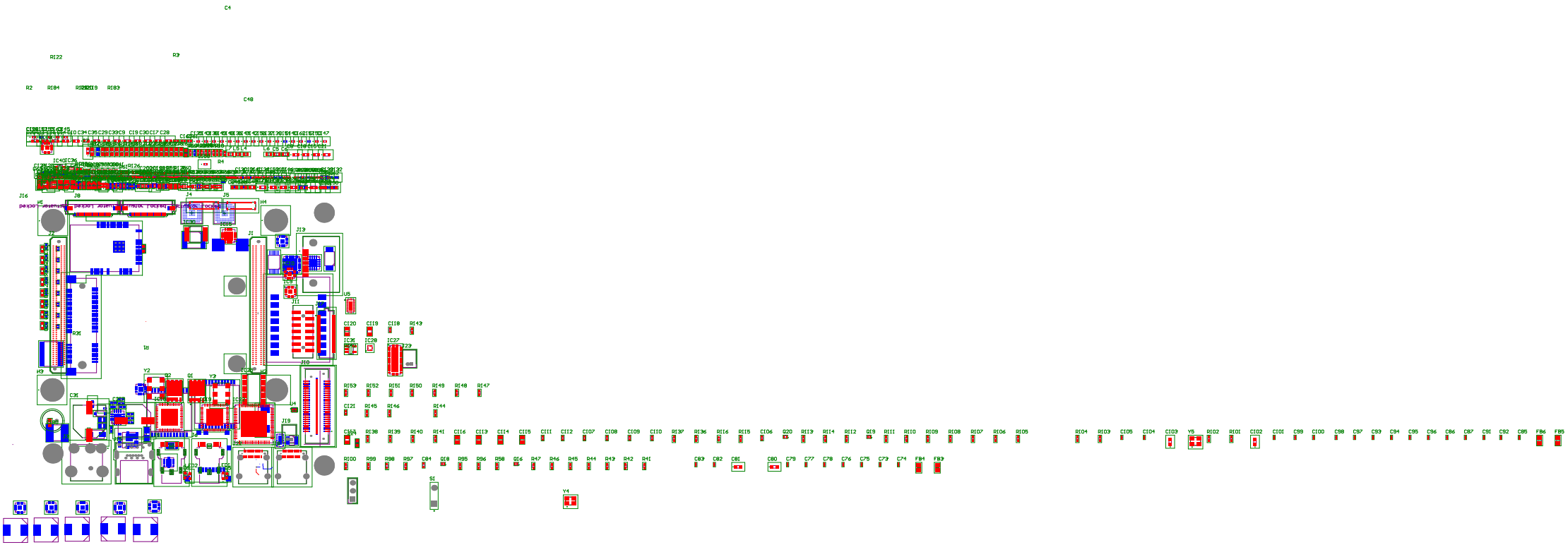

Board Stack Report