Title		
Size A4	Number	Revision
Date: 12/13/2022	Sheet of	
File: C:\embedded_media\..\01 - Title Page.SchDoc	Drawn By:	

Title			
Size A4	Number		Revision
Date:	12/13/2022	Sheet of	
File:	C:\embedded_media\..\02 - Block Diagram.SchDoc	Drawn By:	

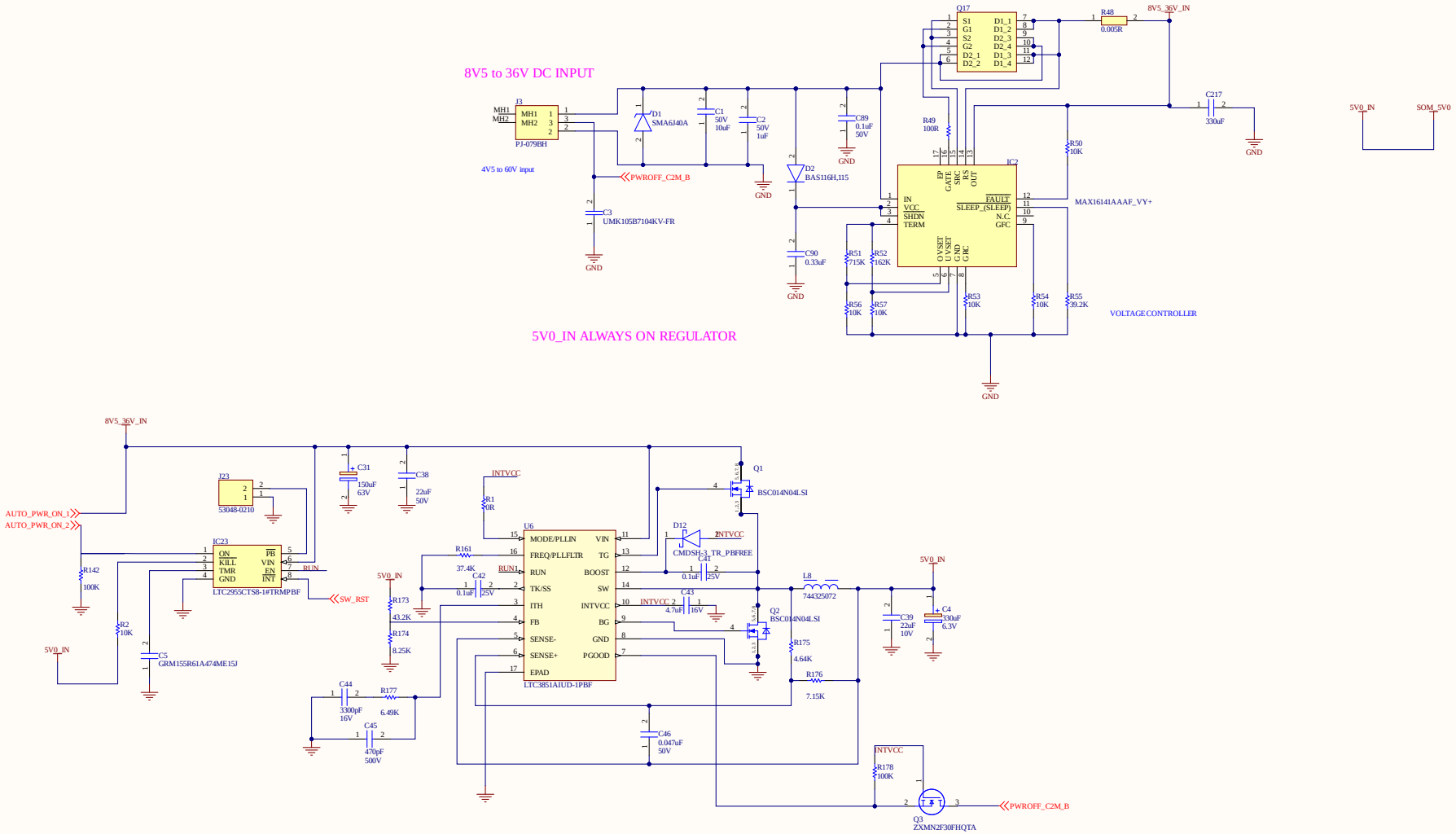

Title		
Size: C	Number	Revision
Date: 12/13/2022	Sheet of	
File: C:\embedded_media\..\03 - Always On Pwr.SchDoc	Drawn By:	

PS_1V2 REGULATOR

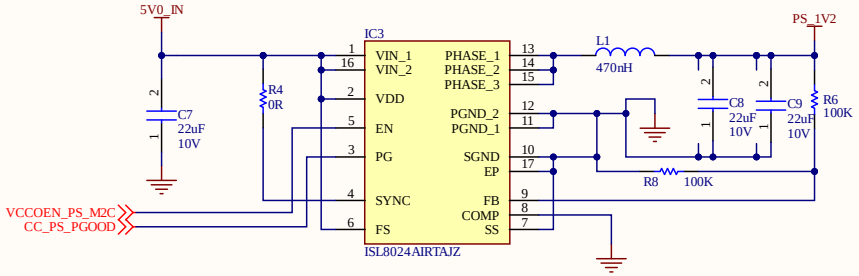

PS_1V8 REGULATOR

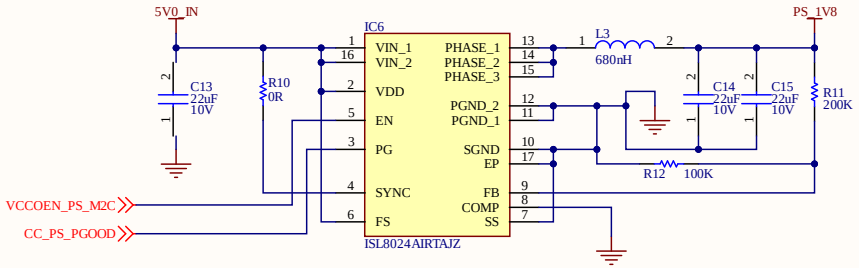

PS_3V3 REGULATOR

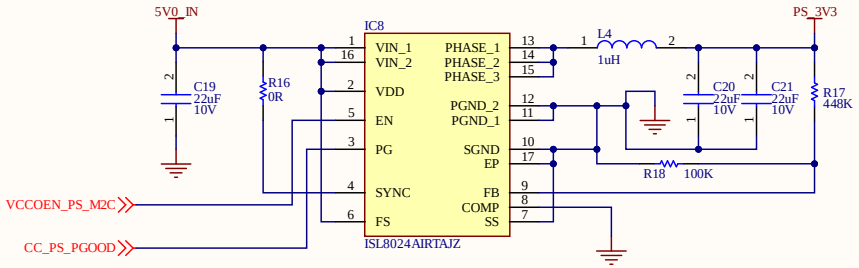

ETH_1V0 REGULATOR

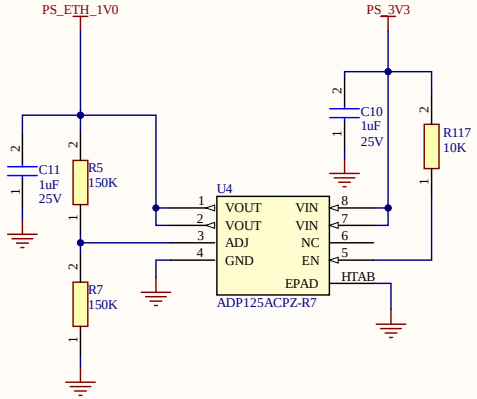

ETH_2V5 REGULATOR

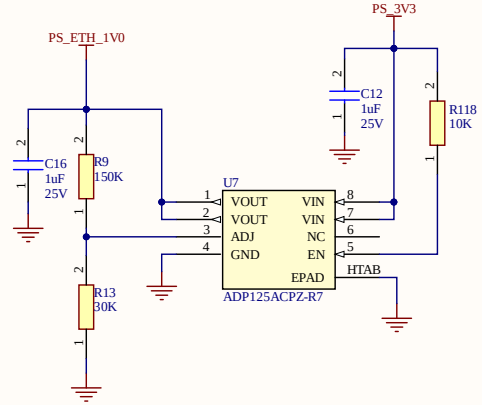

Title		
Size B	Number	Revision
Date: 12/13/2022	Sheet of	
File: C:\embedded_media\..\04 - PS Power.SchDoc	Drawn By:	

PL_1V2 REGULATOR

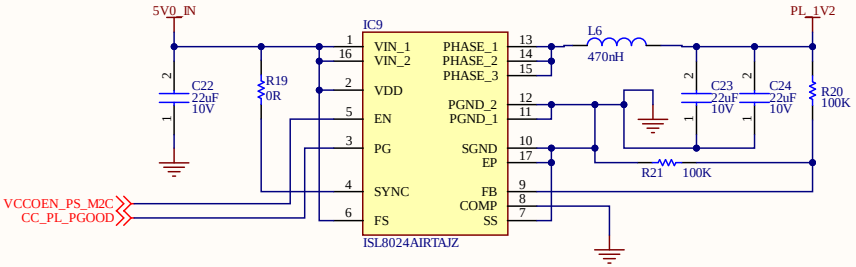

PL_1V8 REGULATOR

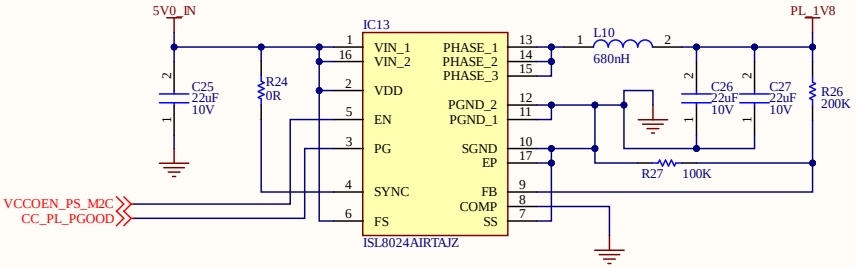

P_3V3 REGULATOR

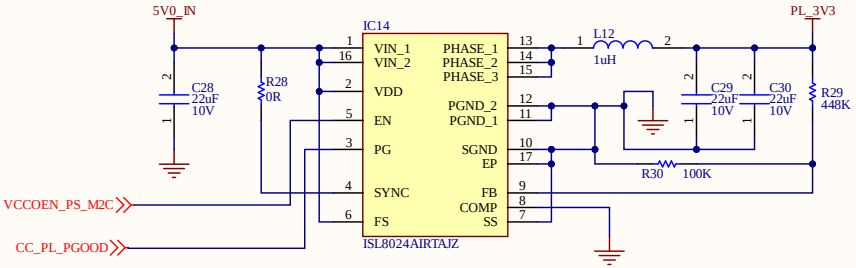

ETH_1V0 REGULATOR

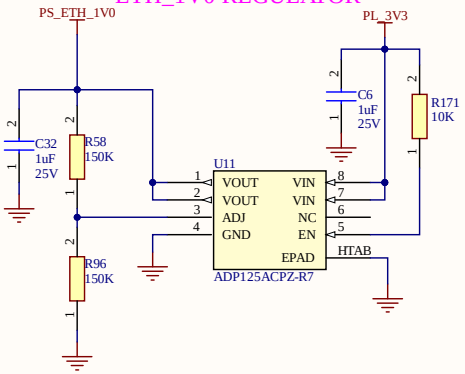

ETH_2V5 REGULATOR

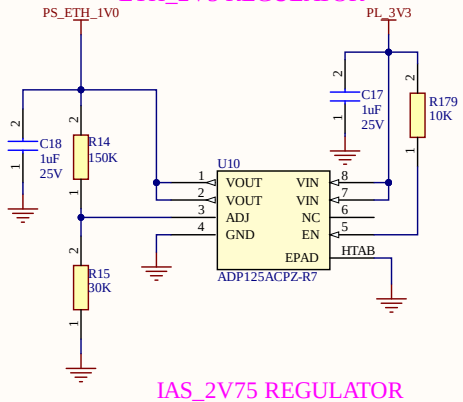

IAS_2V75 REGULATOR

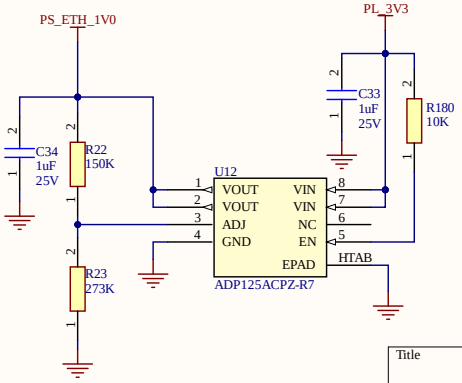

Title		
Size B	Number	Revision
Date: 12/13/2022	Sheet of	
File: C:\embedded_media\..\05 - PL Power.SchDoc	Drawn By:	

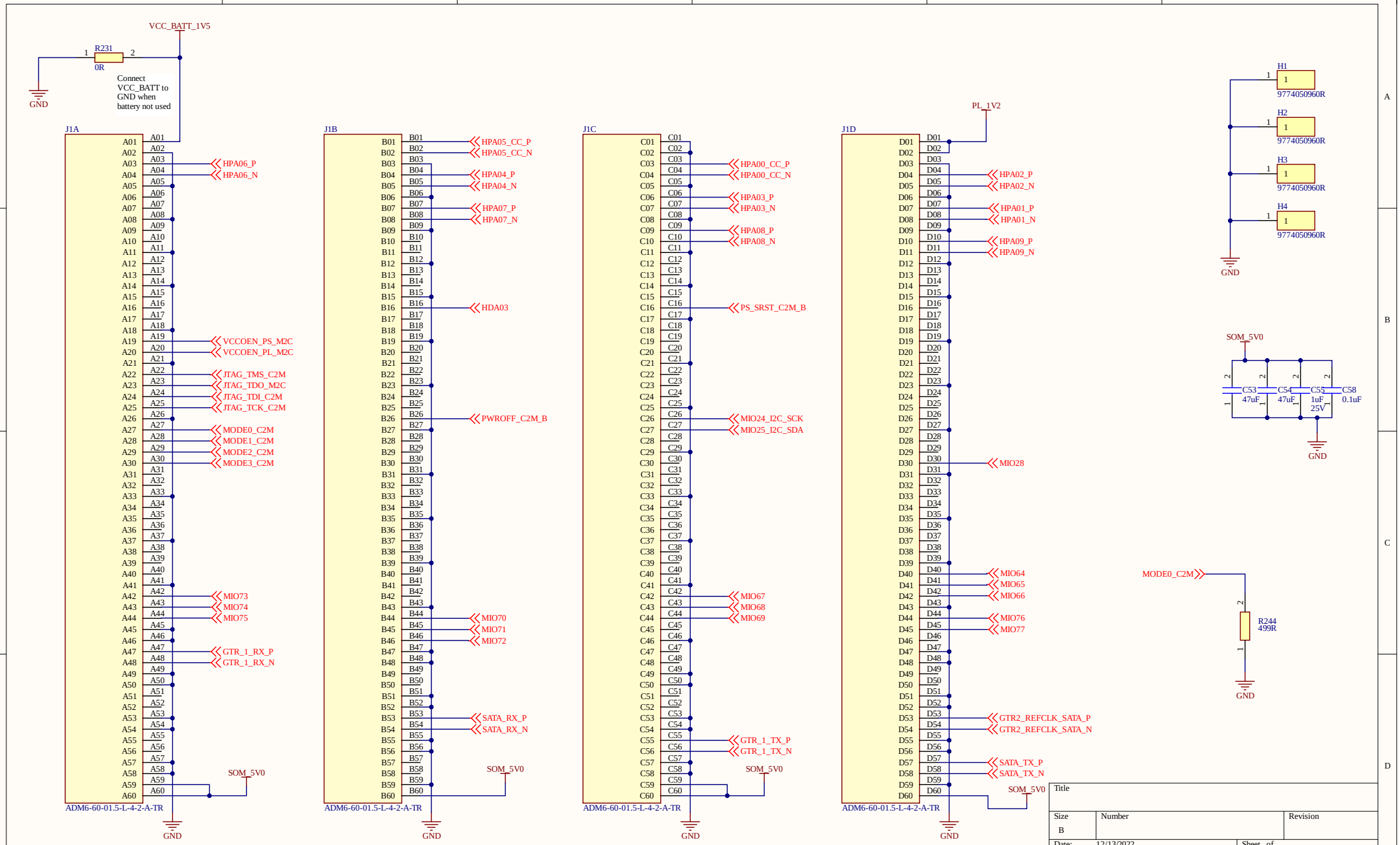
VCC_BATT_1V5
R231
0R
GND
Connect VCC_BATT to GND when battery not used
J1A
ADM6-60-01.5-L-4-2-A-TR
HPA06_P
HPA06_N
VCCOEN_PS_M2C
VCCOEN_PL_M2C
JTAG_TMS_C2M
JTAG_TDO_M2C
JTAG_TDI_C2M
JTAG_TCK_C2M
MODE0_C2M
MODE1_C2M
MODE2_C2M
MODE3_C2M
MIO73
MIO74
MIO75
GTR_1_RX_P
GTR_1_RX_N
SOM_5V0
J1B
HPA05_CC_P
HPA05_CC_N
HPA04_P
HPA04_N
HPA07_P
HPA07_N
HDA03
PWROFF_C2M_B
MIO70
MIO71
MIO72
SATA_RX_P
SATA_RX_N
J1C
HPA00_CC_P
HPA00_CC_N
HPA03_P
HPA03_N
HPA08_P
HPA08_N
PS_SRST_C2M_B
MIO24_I2C_SCK
MIO25_I2C_SDA
MIO67
MIO68
MIO69
GTR_1_TX_P
GTR_1_TX_N
J1D
PL_1V2
HPA02_P
HPA02_N
HPA01_P
HPA01_N
HPA09_P
HPA09_N
MIO28
MIO64
MIO65
MIO66
MIO76
MIO77
GTR2_REFCLK_SATA_P
GTR2_REFCLK_SATA_N
SATA_TX_P
SATA_TX_N
H1
H2
H3
H4
9774050960R
SOM_5V0
C53
47uF
C54
47uF
C55
1uF
25V
C58
0.1uF
MODE0_C2M
R244
499R
Title
Size
B
Number
Revision
Date: 12/13/2022
Sheet of
File: C:\embedded_media\..\06 - SOM240_1 Connectors.SchDoc
Drawn By:

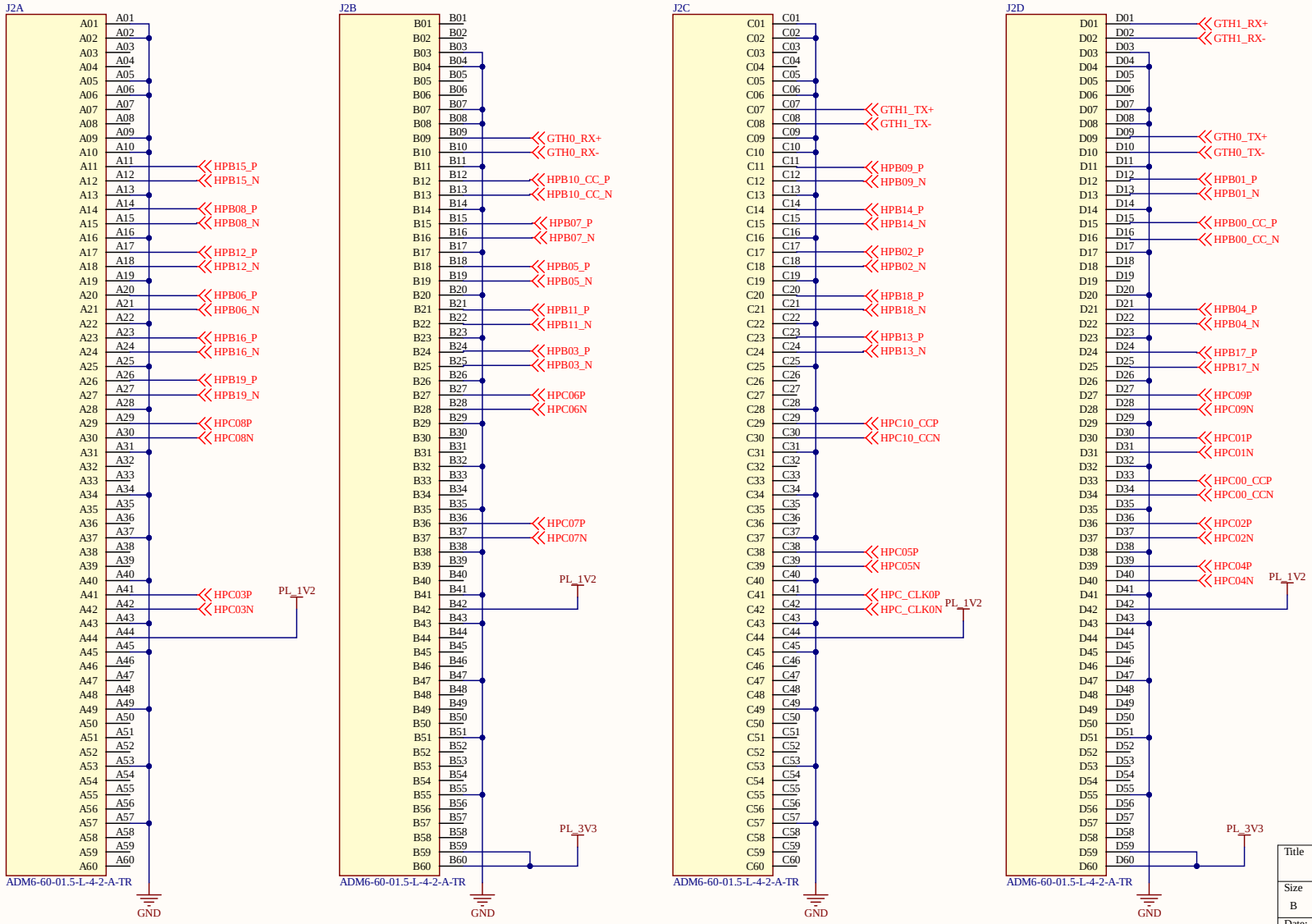

Title		
Size B	Number	Revision
Date: 12/13/2022	Sheet of	
File: C:\embedded_media\..\07 - SOM240_2 Connectors.SchDoc	Drawn By:	

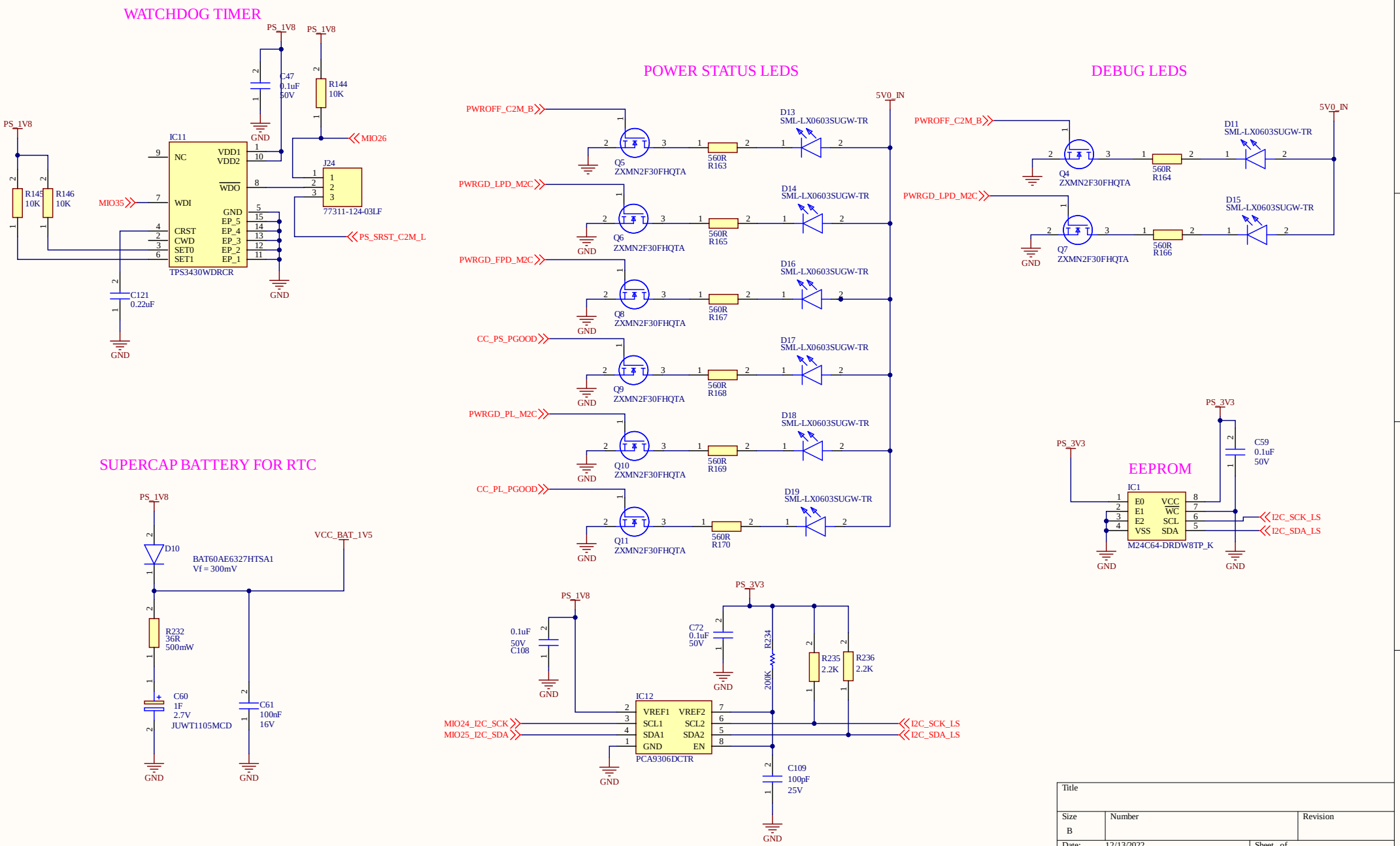
WATCHDOG TIMER
PS_1V8
C47
0.1uF
50V
R144
10K
MIO26
IC11
NC
VDD1
VDD2
WDO
WDI
GND
EP_5
EP_4
EP_3
EP_2
EP_1
CRST
CWD
SET0
SET1
TPS3430WDRCR
J24
77311-124-03LF
PS_SRST_C2M_L
MIO35
R145
10K
R146
10K
C121
0.22uF
GND
POWER STATUS LEDS
5V0_IN
PWROFF_C2M_B
PWRGD_LPD_M2C
PWRGD_FPD_M2C
CC_PS_PGOOD
PWRGD_PL_M2C
CC_PL_PGOOD
Q5
ZXMN2F30FHQTA
Q6
ZXMN2F30FHQTA
Q8
ZXMN2F30FHQTA
Q9
ZXMN2F30FHQTA
Q10
ZXMN2F30FHQTA
Q11
ZXMN2F30FHQTA
560R
R163
560R
R165
560R
R167
560R
R168
560R
R169
560R
R170
D13
SML-LX0603SUGW-TR
D14
SML-LX0603SUGW-TR
D16
SML-LX0603SUGW-TR
D17
SML-LX0603SUGW-TR
D18
SML-LX0603SUGW-TR
D19
SML-LX0603SUGW-TR
DEBUG LEDS
Q4
ZXMN2F30FHQTA
Q7
ZXMN2F30FHQTA
560R
R164
560R
R166
D11
SML-LX0603SUGW-TR
D15
SML-LX0603SUGW-TR
SUPERCAP BATTERY FOR RTC
D10
BAT60AE6327HTSA1
Vf = 300mV
VCC_BAT_1V5
R232
36R
500mW
C60
1F
2.7V
JUWT1105MCD
C61
100nF
16V
PS_3V3
EEPROM
IC1
E0
E1
E2
VSS
VCC
WC
SCL
SDA
M24C64-DRDW8TP_K
C59
0.1uF
50V
I2C_SCK_LS
I2C_SDA_LS
0.1uF
50V
C108
C72
0.1uF
50V
R234
200K
R235
2.2K
R236
2.2K
IC12
VREF1
SCL1
SDA1
GND
VREF2
SCL2
SDA2
EN
PCA9306DCTR
MIO24_I2C_SCK
MIO25_I2C_SDA
C109
100pF
25V
Title
Size
B
Number
Revision
Date:
12/13/2022
Sheet of
File:
C:\embedded_media\..\08 - EEPROM, RTC, WD, LEDs.SchDoc

100MHz CLOCK GENERATOR

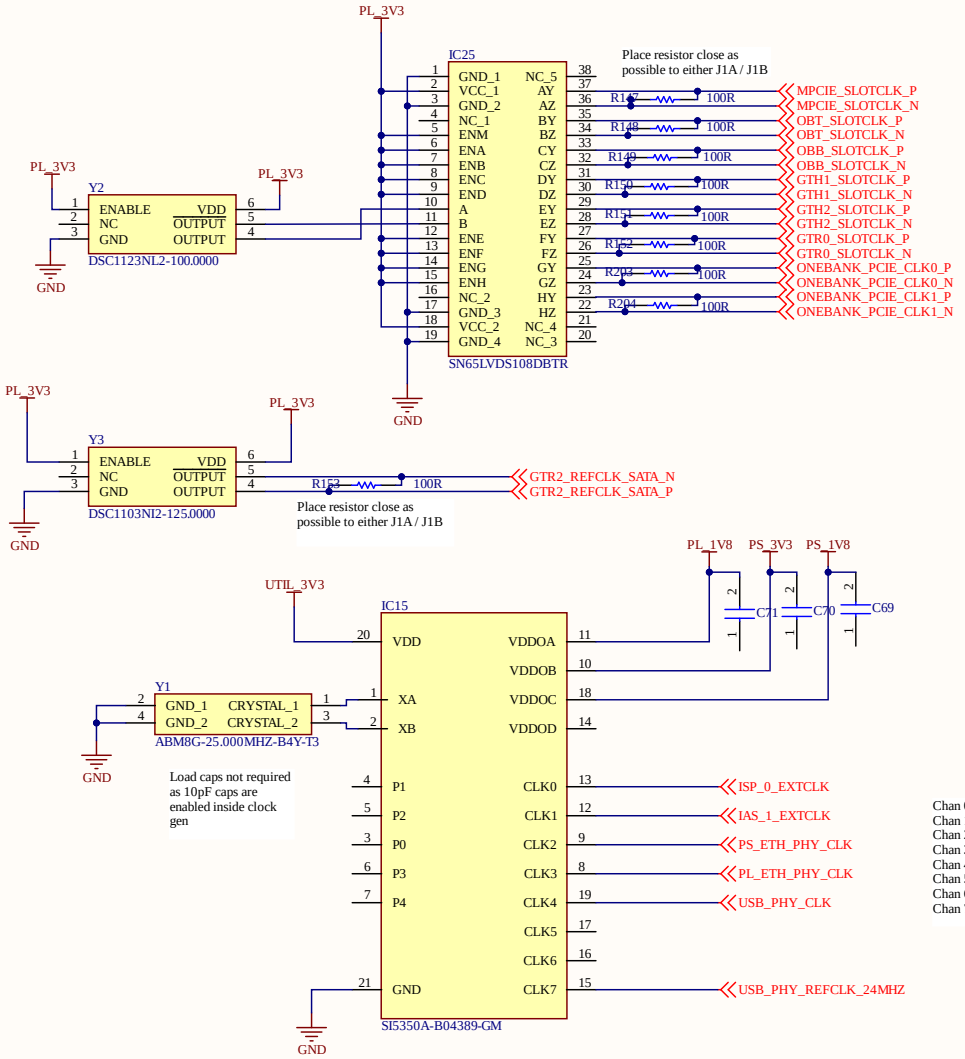

Title		
Size B	Number	Revision
Date: 12/13/2022	Sheet of	
File: C:\embedded_media\..\09 - Clock gen.SchDoc	Drawn By:	

FTDI JTAG/UART

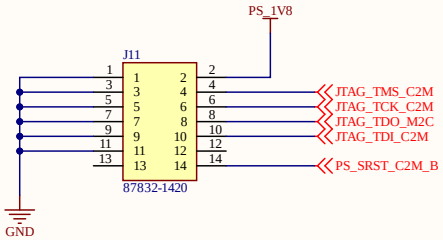

Title			
Size B	Number		Revision
Date: 12/13/2022		Sheet of	
File: C:\embedded_media\..\10 - JTAG UART.SchDoc		Drawn By:	

Display Port

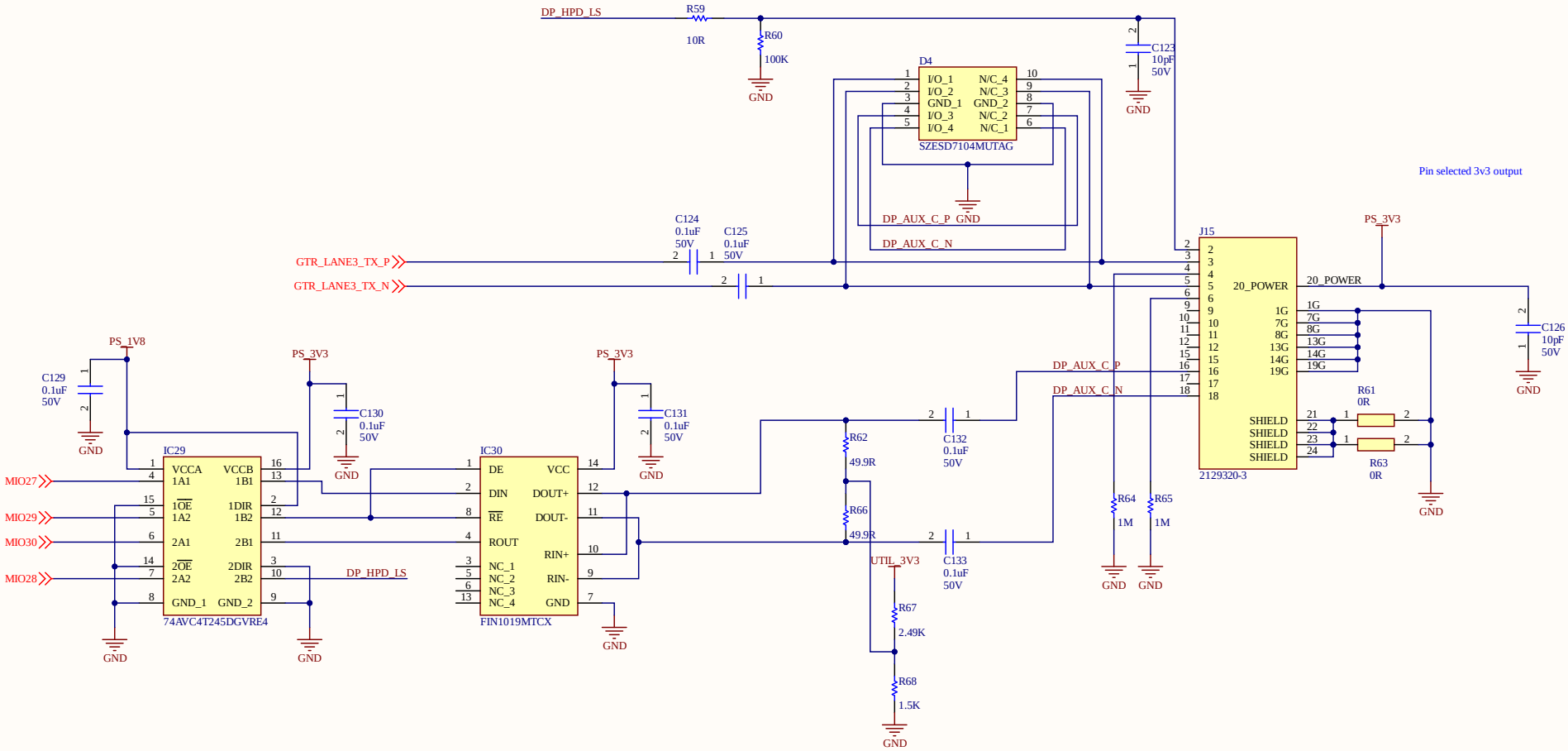

Title			
Size B	Number		Revision
Date: 12/13/2022		Sheet of	
File: C:\embedded_media\..\11 - Display Port.SchDoc		Drawn By:	

Camera MIPI connectors

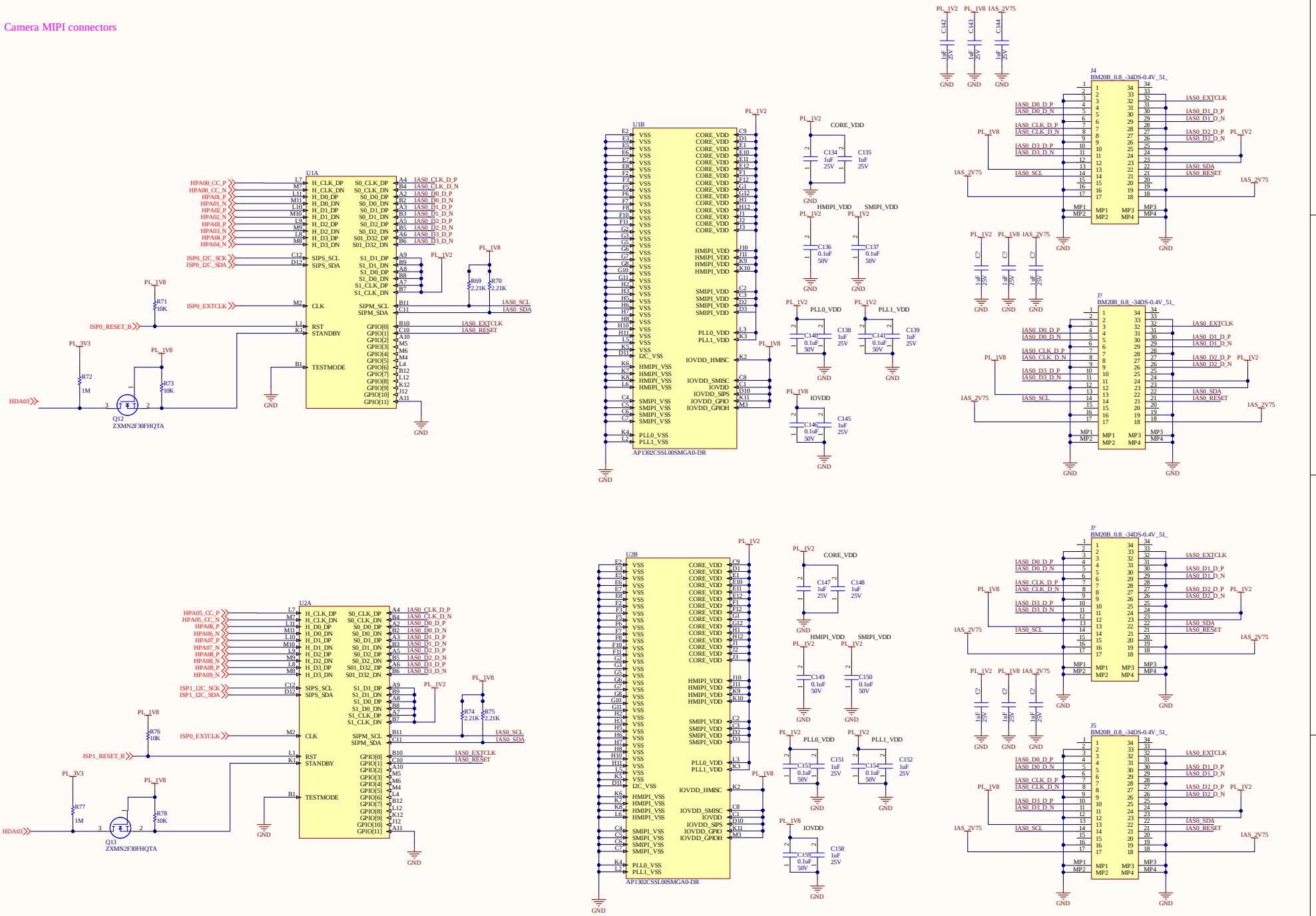

Title		
Size C	Number	Revision
Date: 12/13/2022	Sheet of	
File: C:\embedded_media\...\12 - IAS MIPI Cam.SchDoc		

Ethernet PHY for PS

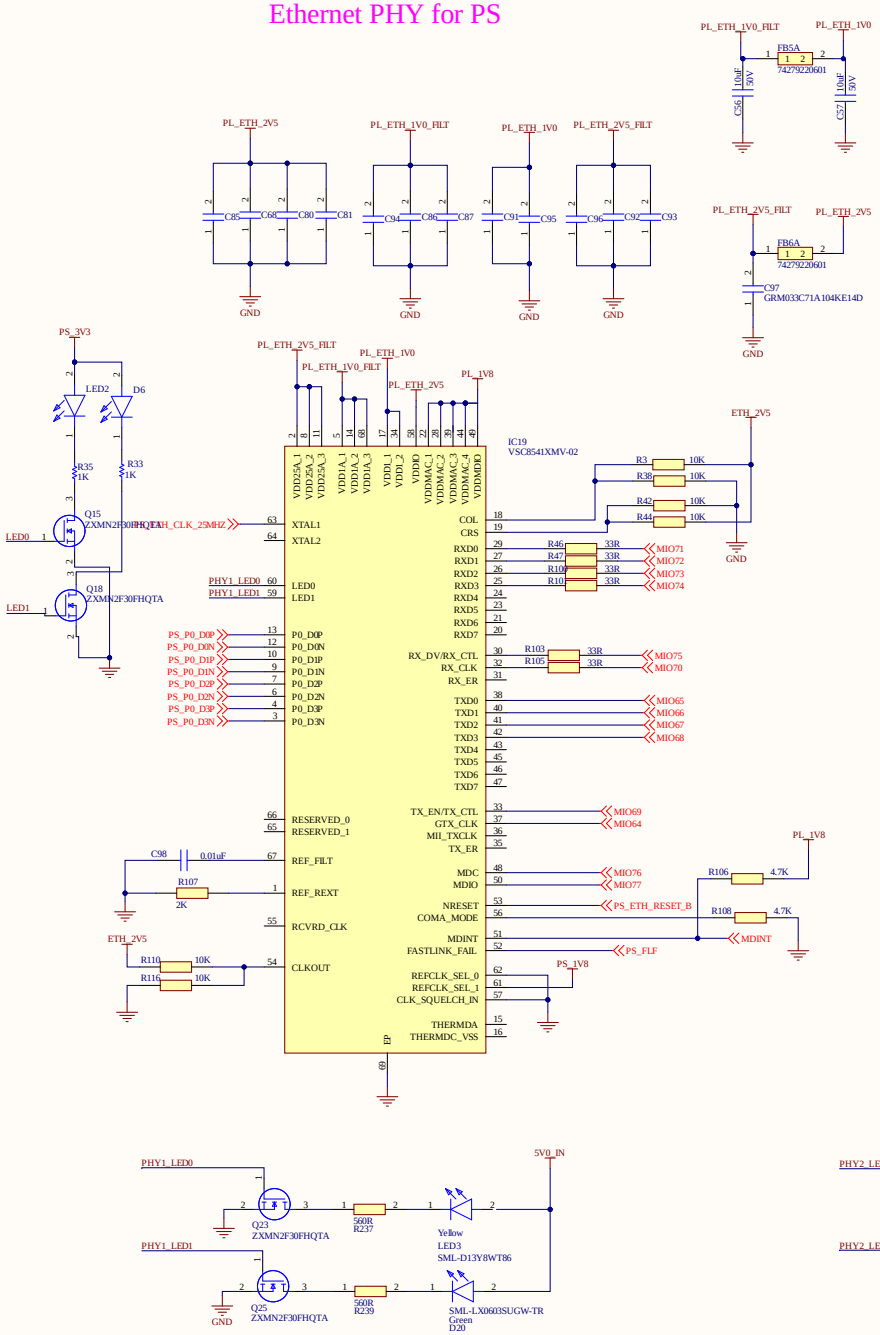

Ethernet PHY for PL

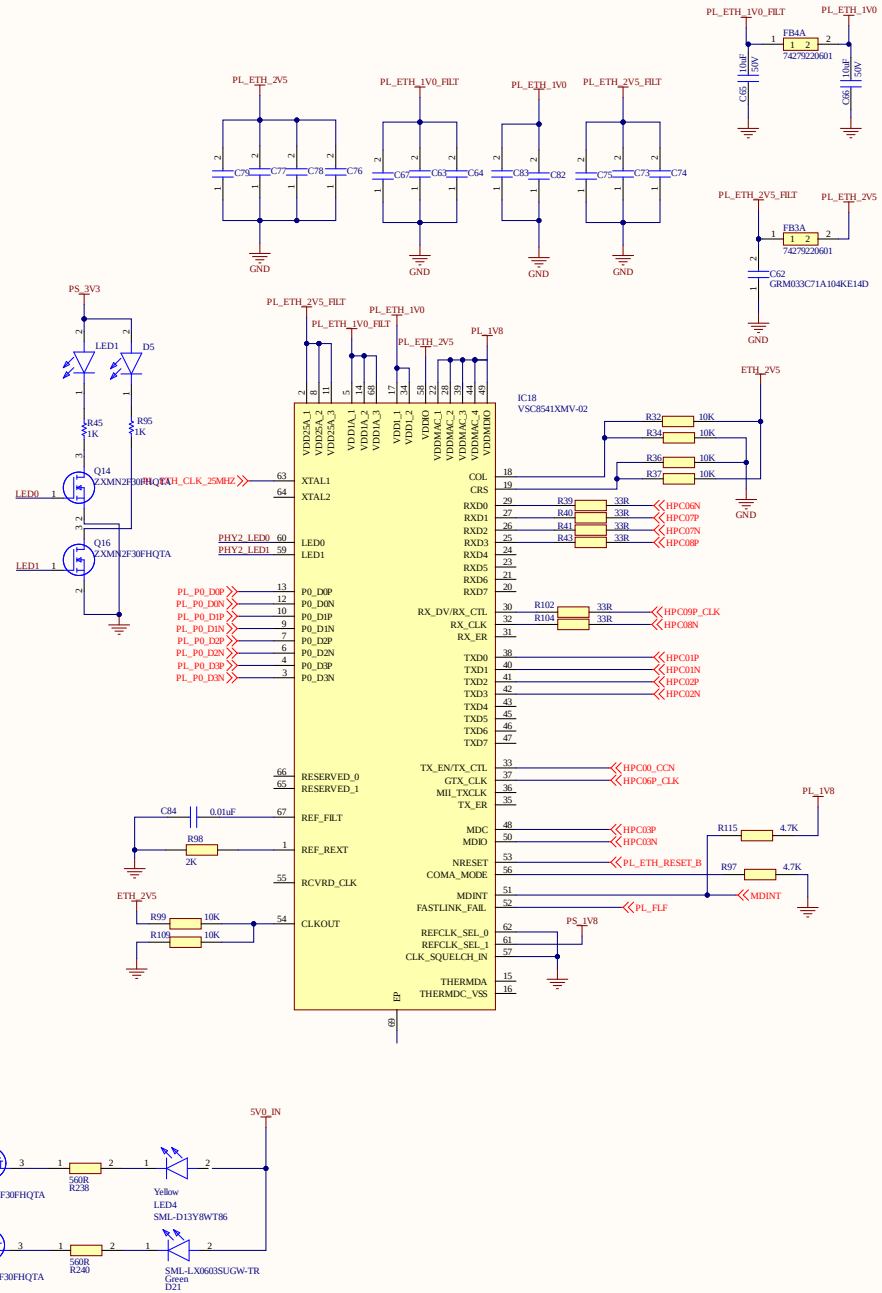

Title		
Size C	Number	Revision
Date: 12/13/2022	Sheet of	
File: C:\embedded_media\...\13 - PS+PL Ethernet.SchDoc		

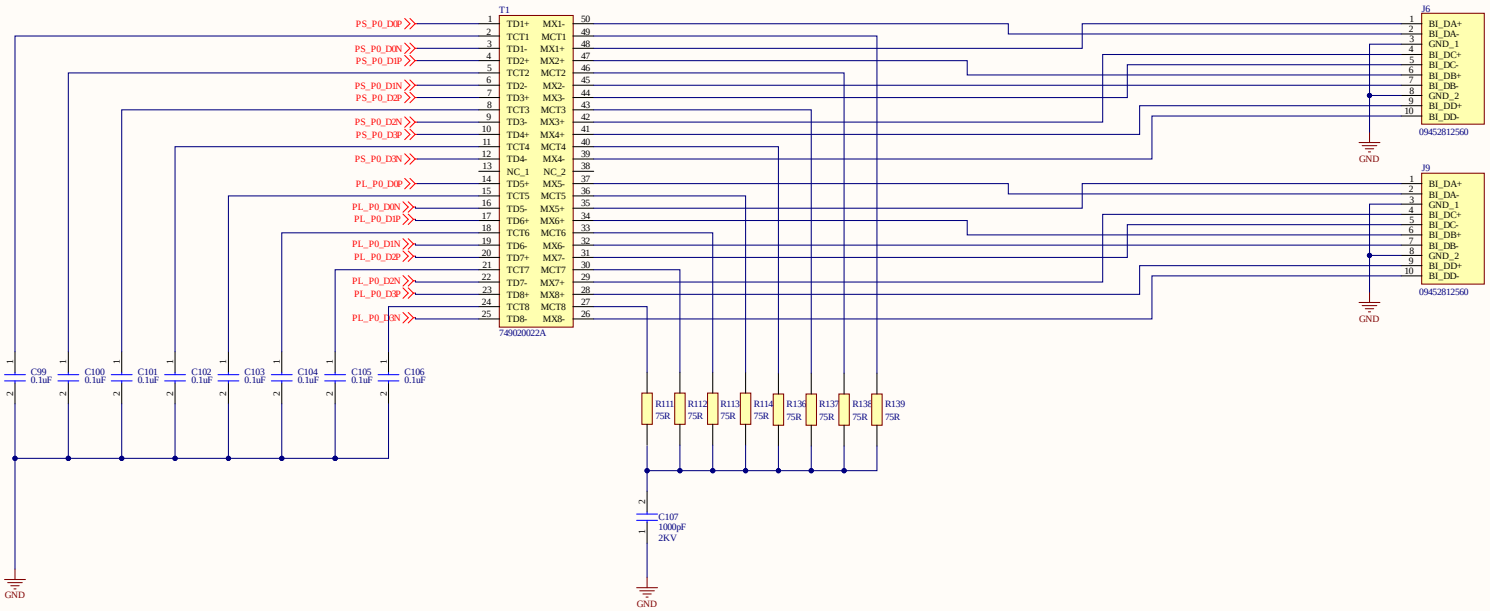

Title		
Size C	Number	Revision
Date: 12/13/2022	Sheet of	
File: C:\embedded_media\...\14 - PS+PL Ethernet.SchDoc		

C52

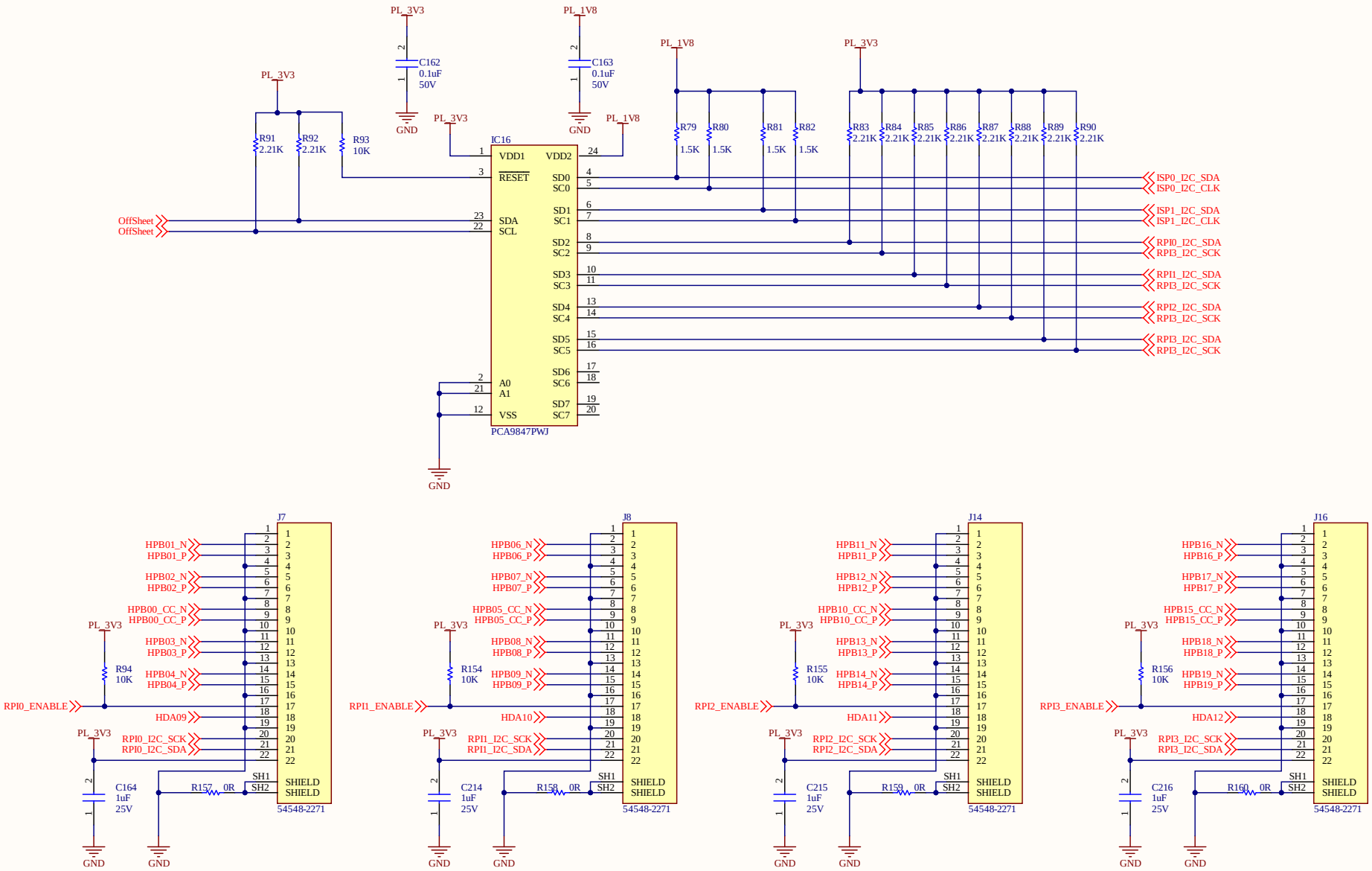

Title		
Size B	Number	Revision
Date: 12/13/2022		Sheet of
File: C:\embedded_media\..\15 - RPi Camera Connector.SchDoc		Drawn By:

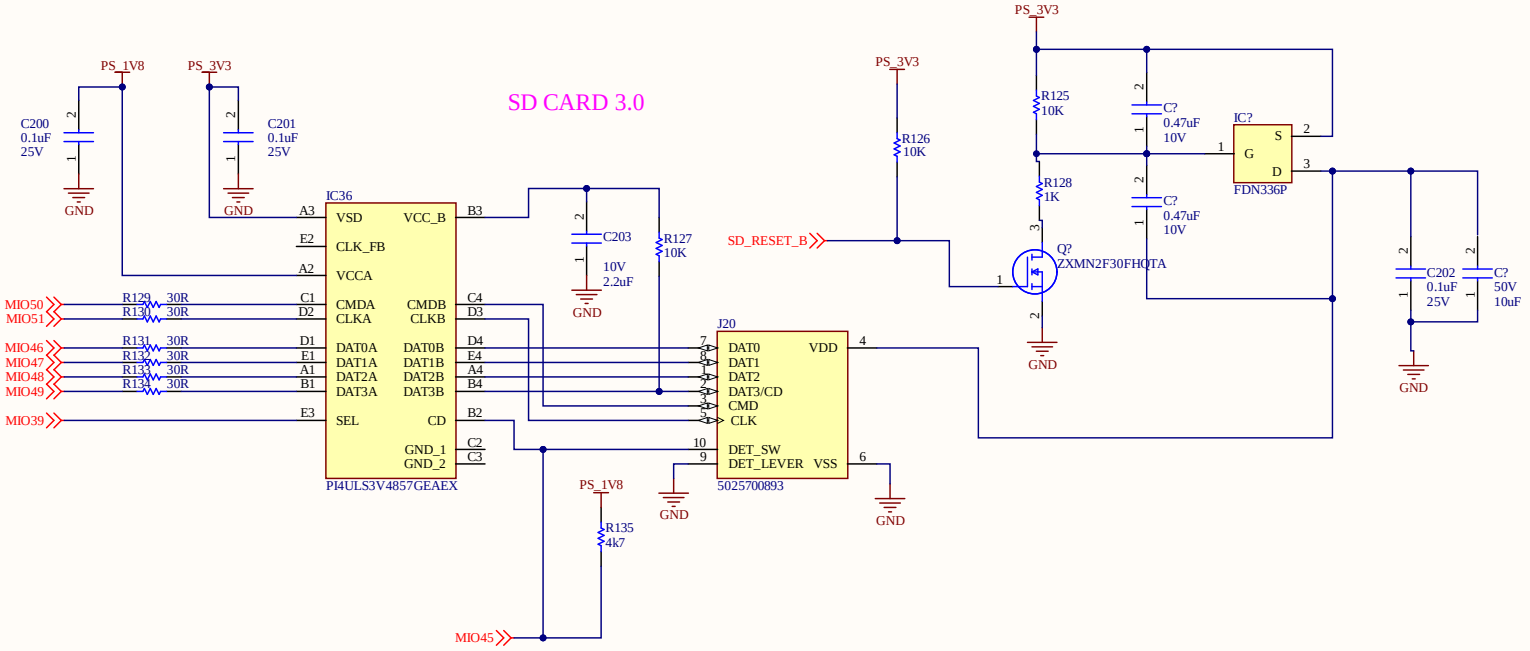

Title		
Size B	Number	Revision
Date: 12/13/2022	Sheet of	
File: C:\embedded_media\..\16 - SD Card, PMOD.SchDoc	Drawn By:	

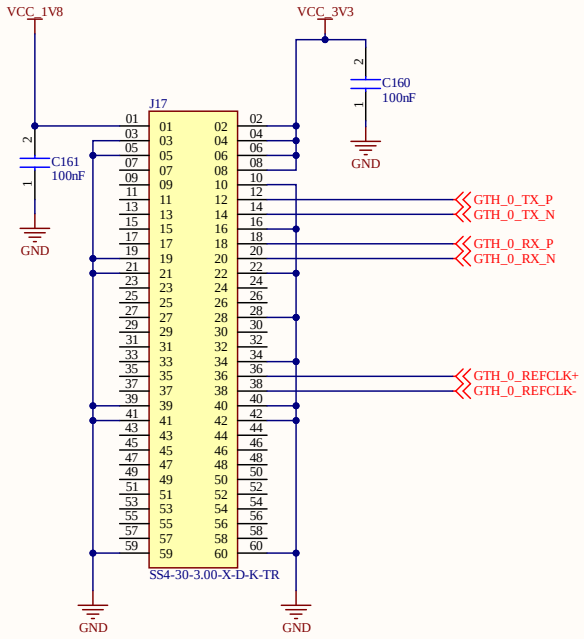

Title		
Size B	Number	Revision
Date: 12/13/2022	Sheet of	
File: C:\embedded_media\..\17 - Samtec 30 pin .SchDoc	Drawn By:	

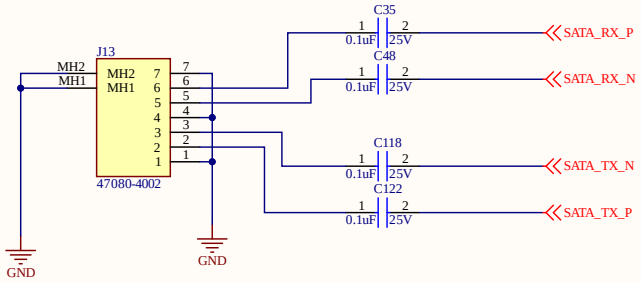

Title		
Size B	Number	Revision
Date: 12/13/2022	Sheet of	
File: C:\embedded_media\..\18 - SATA Connector.SchDoc	Drawn By:	

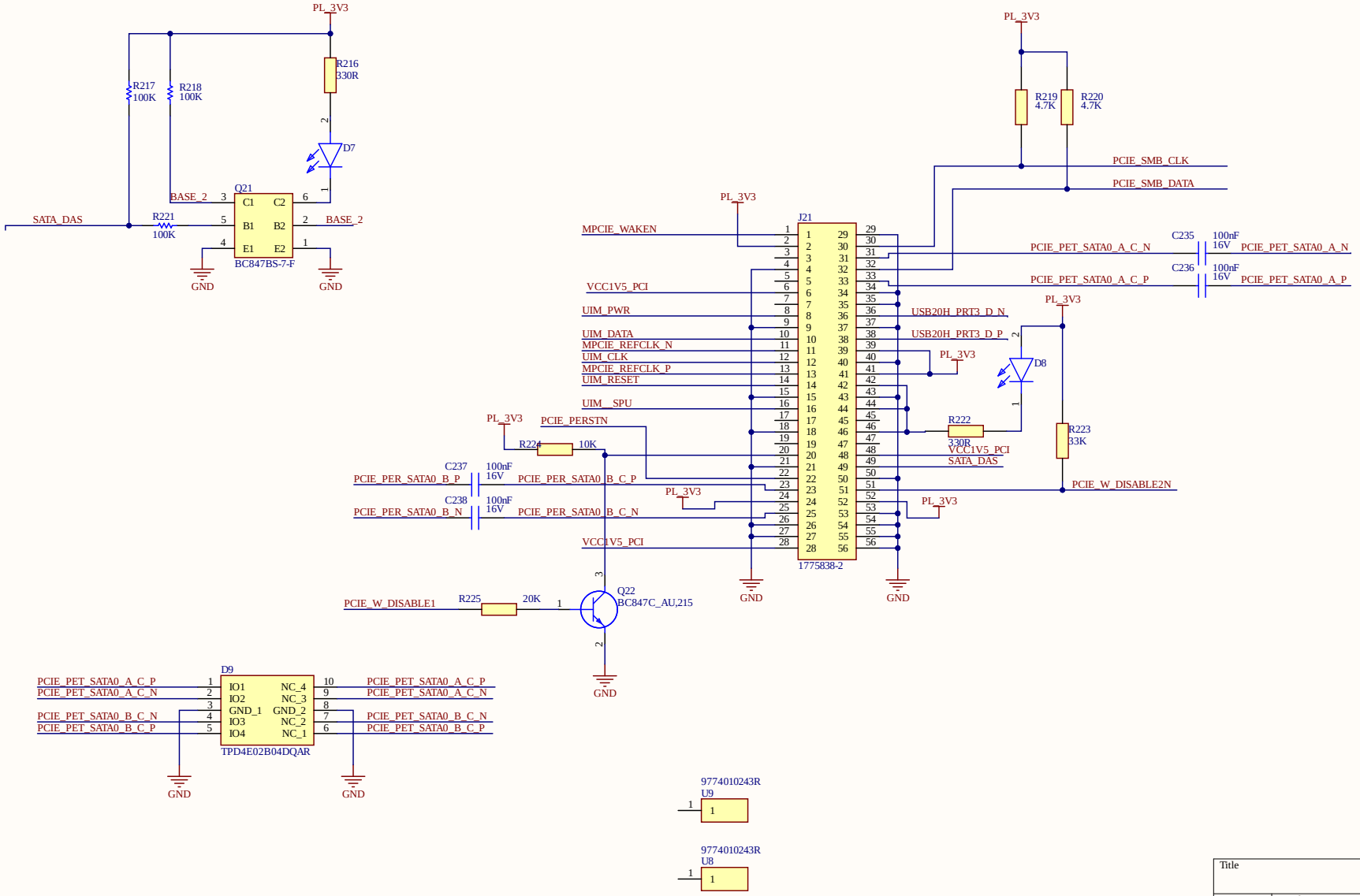

Title		
Size B	Number	Revision
Date: 12/13/2022	Sheet of	
File: C:\embedded_media\..\19 - mPCIe.SchDoc	Drawn By:	

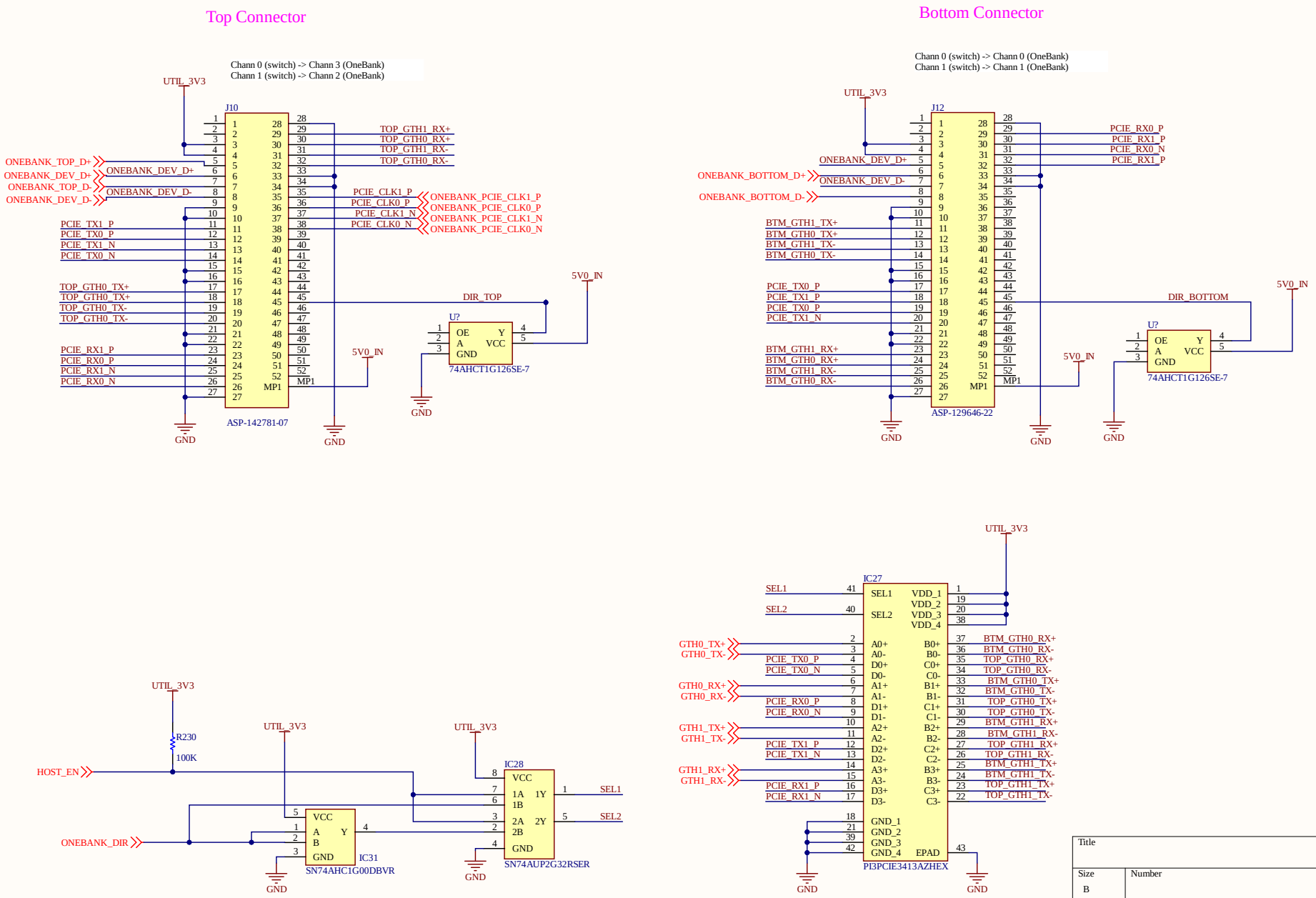
Top Connector
Chann 0 (switch) -> Chann 3 (OneBank)
Chann 1 (switch) -> Chann 2 (OneBank)
UTIL_3V3
J10
ASP-142781-07
ONEBANK_TOP_D+
ONEBANK_DEV_D+
ONEBANK_TOP_D-
ONEBANK_DEV_D-
ONEBANK_DEV_D+
ONEBANK_DEV_D-
PCIE_TX1_P
PCIE_TX0_P
PCIE_TX1_N
PCIE_TX0_N
TOP_GTH0_TX+
TOP_GTH0_TX+
TOP_GTH0_TX-
TOP_GTH0_TX-
PCIE_RX1_P
PCIE_RX0_P
PCIE_RX1_N
PCIE_RX0_N
TOP_GTH1_RX+
TOP_GTH0_RX+
TOP_GTH1_RX-
TOP_GTH0_RX-
PCIE_CLK1_P
PCIE_CLK0_P
PCIE_CLK1_N
PCIE_CLK0_N
ONEBANK_PCIE_CLK1_P
ONEBANK_PCIE_CLK0_P
ONEBANK_PCIE_CLK1_N
ONEBANK_PCIE_CLK0_N
DIR_TOP
5V0_IN
U?
OE
A
GND
Y
VCC
74AHCT1G126SE-7
GND
Bottom Connector
Chann 0 (switch) -> Chann 0 (OneBank)
Chann 1 (switch) -> Chann 1 (OneBank)
UTIL_3V3
J12
ASP-129646-22
ONEBANK_DEV_D+
ONEBANK_DEV_D-
ONEBANK_BOTTOM_D+
ONEBANK_BOTTOM_D-
BTM_GTH1_TX+
BTM_GTH0_TX+
BTM_GTH1_TX-
BTM_GTH0_TX-
PCIE_TX0_P
PCIE_TX1_P
PCIE_TX0_P
PCIE_TX1_N
BTM_GTH1_RX+
BTM_GTH0_RX+
BTM_GTH1_RX-
BTM_GTH0_RX-
PCIE_RX0_P
PCIE_RX1_P
PCIE_RX0_N
PCIE_RX1_P
DIR_BOTTOM
5V0_IN
U?
OE
A
GND
Y
VCC
74AHCT1G126SE-7
GND
UTIL_3V3
R230
100K
HOST_EN
ONEBANK_DIR
IC31
VCC
A
B
GND
Y
SN74AHC1G00DBVR
IC28
VCC
1A
1B
2A
2B
GND
1Y
2Y
SN74AUP2G32RSER
SEL1
SEL2
UTIL_3V3
IC27
SEL1
SEL2
VDD_1
VDD_2
VDD_3
VDD_4
A0+
A0-
D0+
D0-
A1+
A1-
D1+
D1-
A2+
A2-
D2+
D2-
A3+
A3-
D3+
D3-
B0+
B0-
C0+
C0-
B1+
B1-
C1+
C1-
B2+
B2-
C2+
C2-
B3+
B3-
C3+
C3-
GND_1
GND_2
GND_3
GND_4
EPAD
PI3PCIE3413AZHEX
GTH0_TX+
GTH0_TX-
GTH0_RX+
GTH0_RX-
GTH1_TX+
GTH1_TX-
GTH1_RX+
GTH1_RX-
BTM_GTH0_RX+
BTM_GTH0_RX-
TOP_GTH0_RX+
TOP_GTH0_RX-
BTM_GTH0_TX+
BTM_GTH0_TX-
TOP_GTH0_TX+
TOP_GTH0_TX-
BTM_GTH1_RX+
BTM_GTH1_RX-
TOP_GTH1_RX+
TOP_GTH1_RX-
BTM_GTH1_TX+
BTM_GTH1_TX-
TOP_GTH1_TX+
TOP_GTH1_TX-
GND
Title
Size
B
Number
Revision
Date: 12/13/2022
Sheet of
File: C:\embedded_media\..\20 - OneBank Connectors.SchDoc
Drawn By:

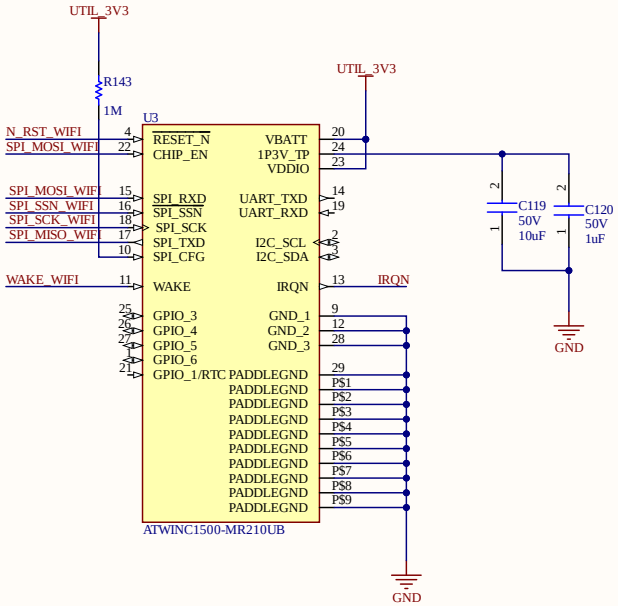

Title		
Size B	Number	Revision
Date: 12/13/2022		Sheet of
File: C:\embedded_media\..\21 - WiFi.SchDoc		Drawn By:

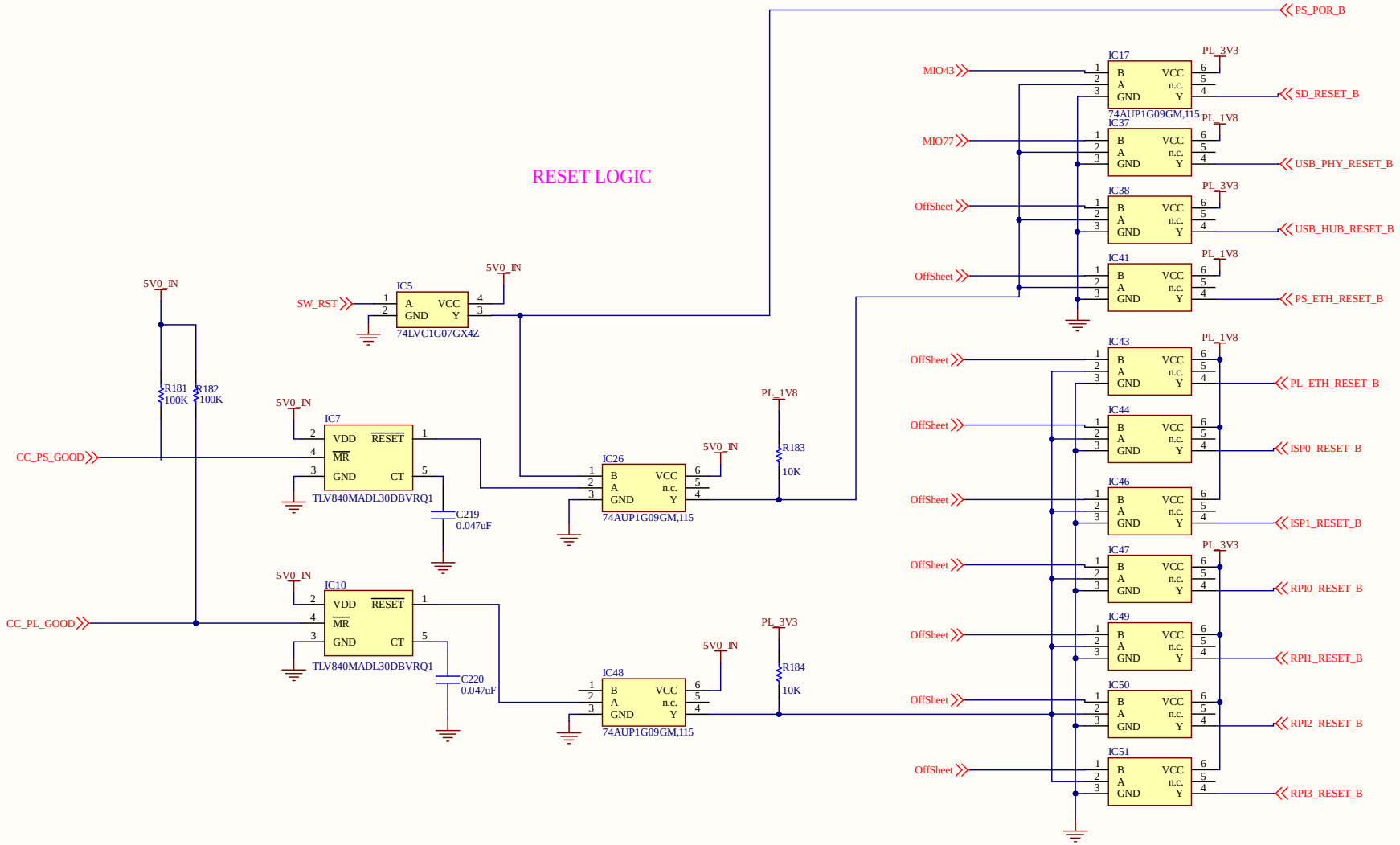

Title		
Size B	Number	Revision
Date: 12/13/2022	Sheet of	
File: C:\embedded_media\..\22 - Reset Logic.SchDoc	Drawn By:	

SWITCH SETTINGS

MODE Configuration

0000 : JTAG
0010 : QPSI (32bit)
0110 : eMMC
1110 : SD Card

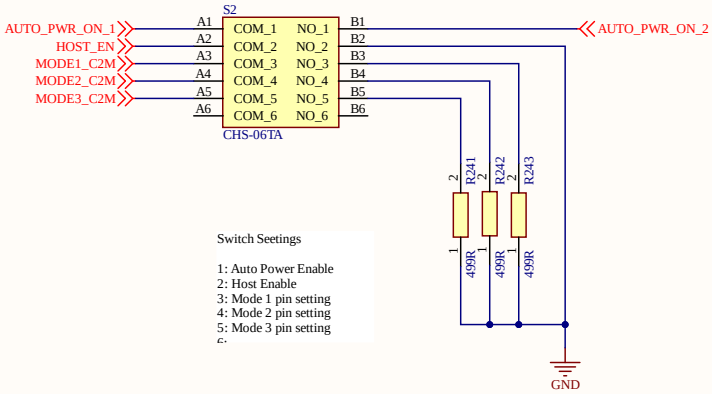

Switch Seetings

1: Auto Power Enable
2: Host Enable
3: Mode 1 pin setting
4: Mode 2 pin setting
5: Mode 3 pin setting
6:

12V FAN HEADER

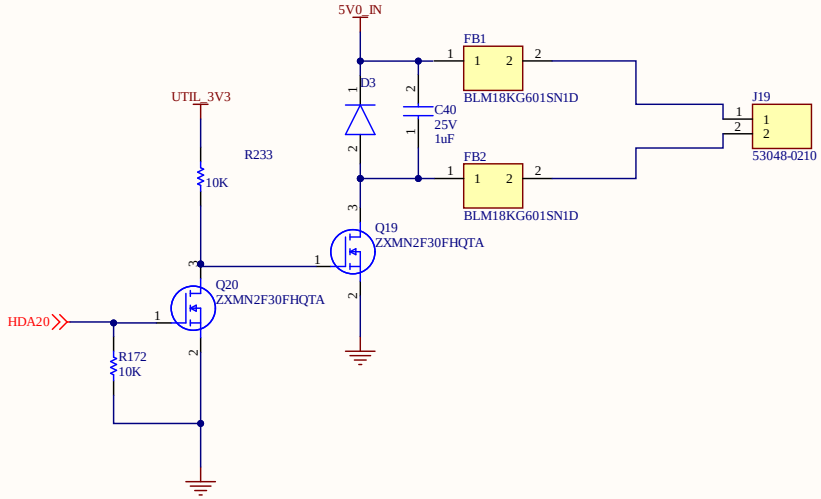

Title		
Size B	Number	Revision
Date: 12/13/2022	Sheet of	
File: C:\embedded_media\..\23 - Fan & Switches.SchDoc	Drawn By:	

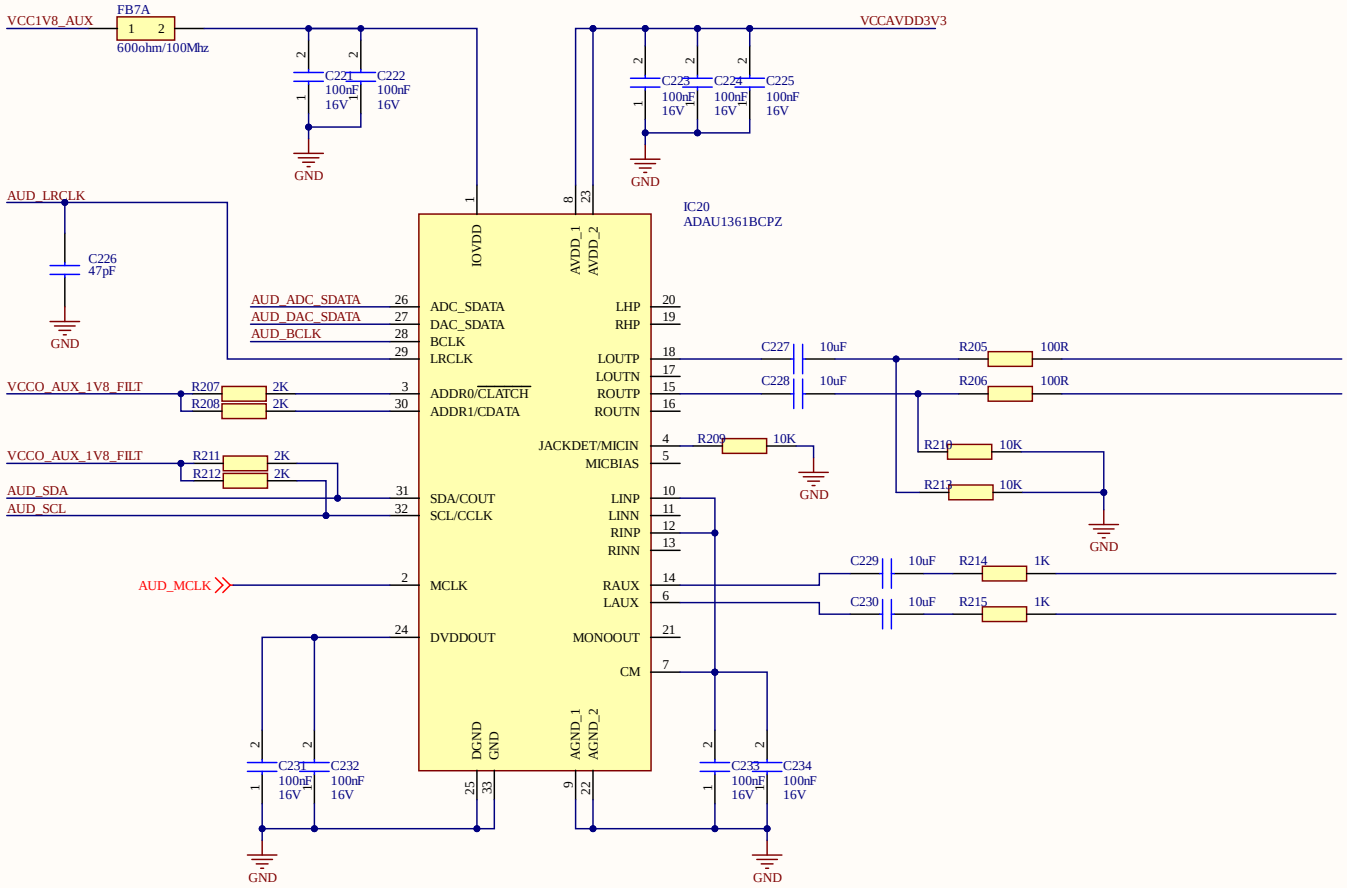

Title		
Size B	Number	Revision
Date: 12/13/2022	Sheet of	
File: C:\embedded_media\..\24 - Audio CODEC.SchDoc	Drawn By:	

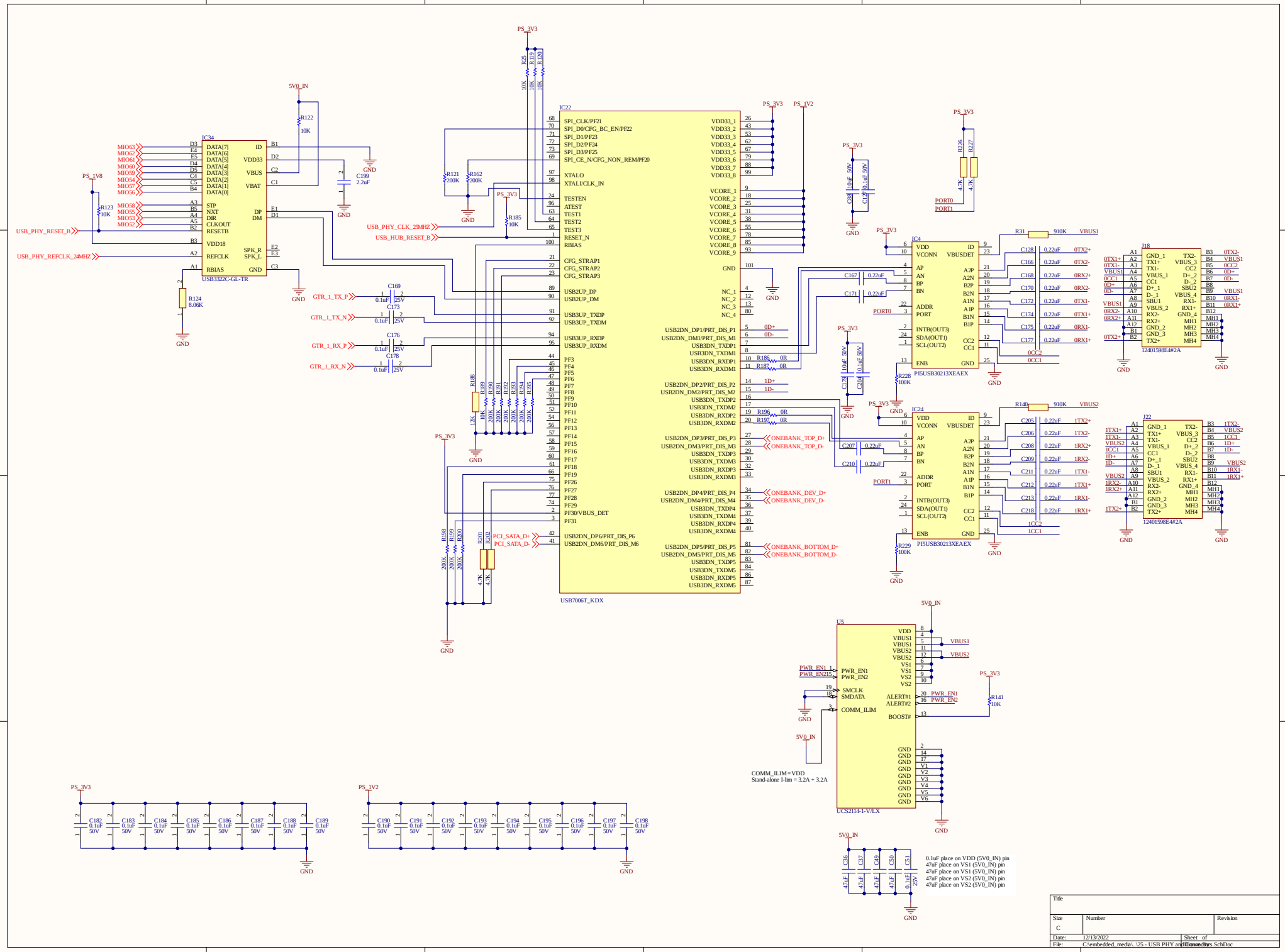
IC34
USB3322C-GL-TR
IC22
USB7006T_KDX
IC4
PI5USB30213XEAEX
IC24
PI5USB30213XEAEX
J18
12401598E4#2A
J22
12401598E4#2A
U5
UCS2114-1-V/LX
PS_3V3
PS_1V2
PS_1V8
5V0_IN
GND
USB_PHY_RESET_B
USB_PHY_REFCLK_24MHZ
USB_PHY_CLK_25MHZ
USB_HUB_RESET_B
GTR_1_TX_P
GTR_1_TX_N
GTR_1_RX_P
GTR_1_RX_N
PCI_SATA_D+
PCI_SATA_D-
ONEBANK_TOP_D+
ONEBANK_TOP_D-
ONEBANK_DEV_D+
ONEBANK_DEV_D-
ONEBANK_BOTTOM_D+
ONEBANK_BOTTOM_D-
VBUS1
VBUS2
PORT0
PORT1
PWR_EN1
PWR_EN2
COMM_ILIM = VDD
Stand-alone I-lim = 3.2A + 3.2A
0.1uF place on VDD (5V0_IN) pin
47uF place on VS1 (5V0_IN) pin
47uF place on VS1 (5V0_IN) pin
47uF place on VS2 (5V0_IN) pin
47uF place on VS2 (5V0_IN) pin
Title
Size
C
Number
Revision
Date: 12/13/2022
Sheet of
File: C:\embedded_media\..\25 - USB PHY and Dock.SchDoc
Drawn By:

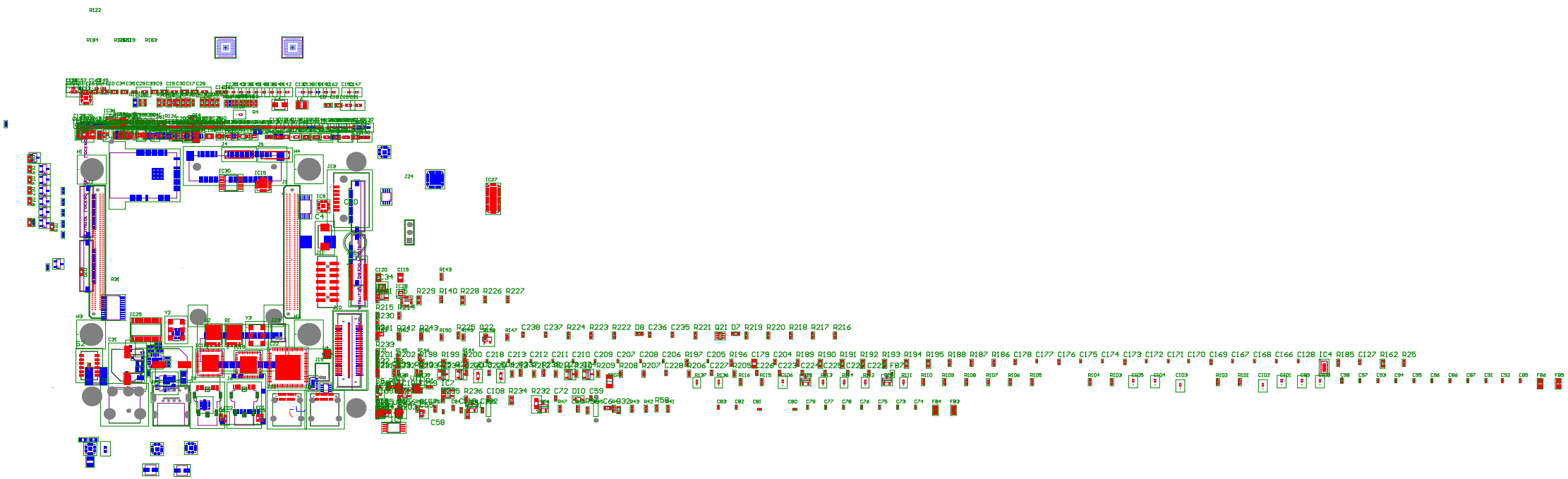

Board Stack Report