RowOne®

Style 8094

Metropolitan

44.5" BACK HEIGHT ON ALL PIECES

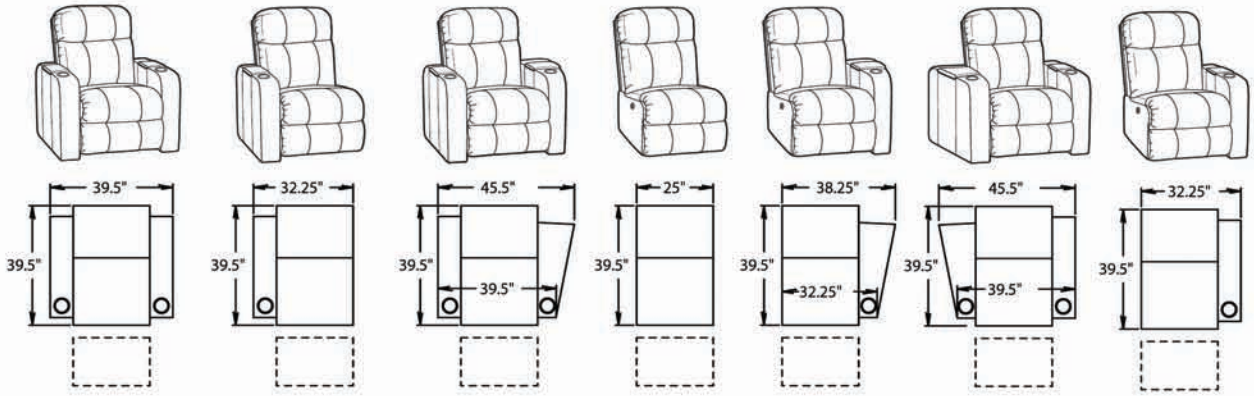

-08 Recliner | -11 LF Arm Recliner | -18 LF Arm RF Wedge | -01 Armless Recliner | -16 LF Armless RF Wedge | -17 LF Wedge RF Arm | -12 RF Arm

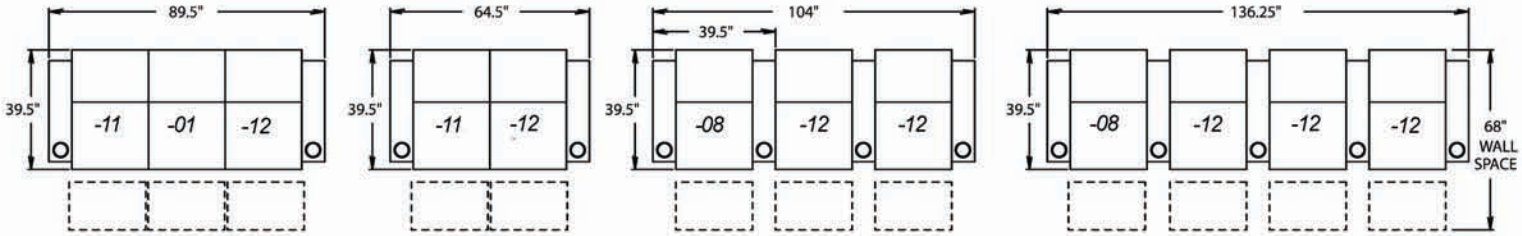

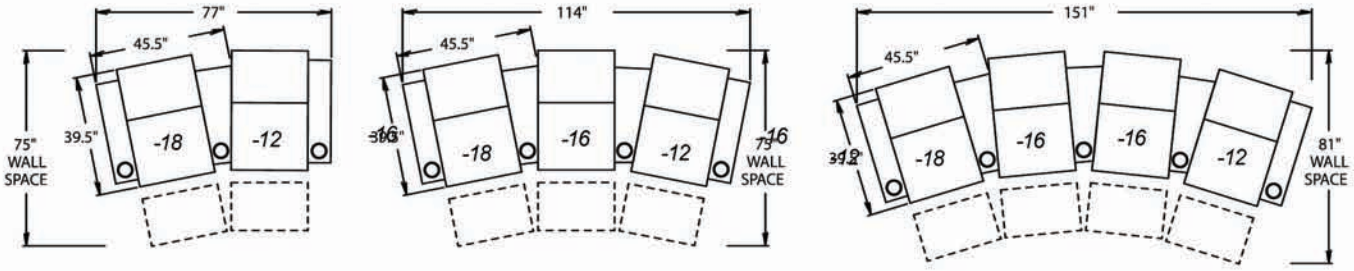

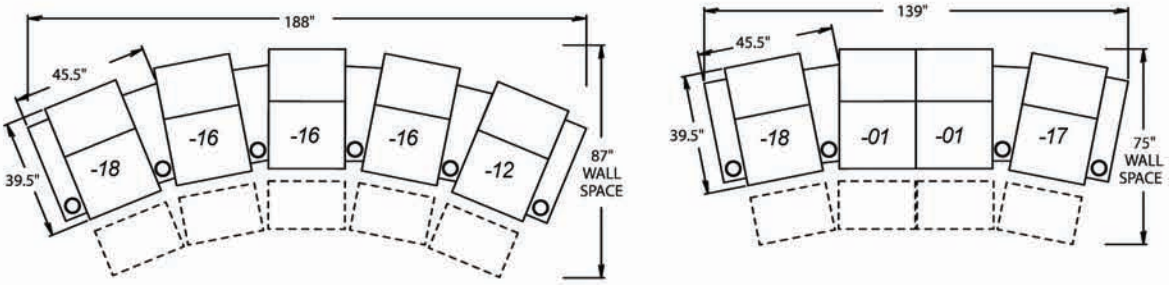

© 2011 RowOne®
Specifications accurate at time of printing.
Specifications are subject to change without notification.