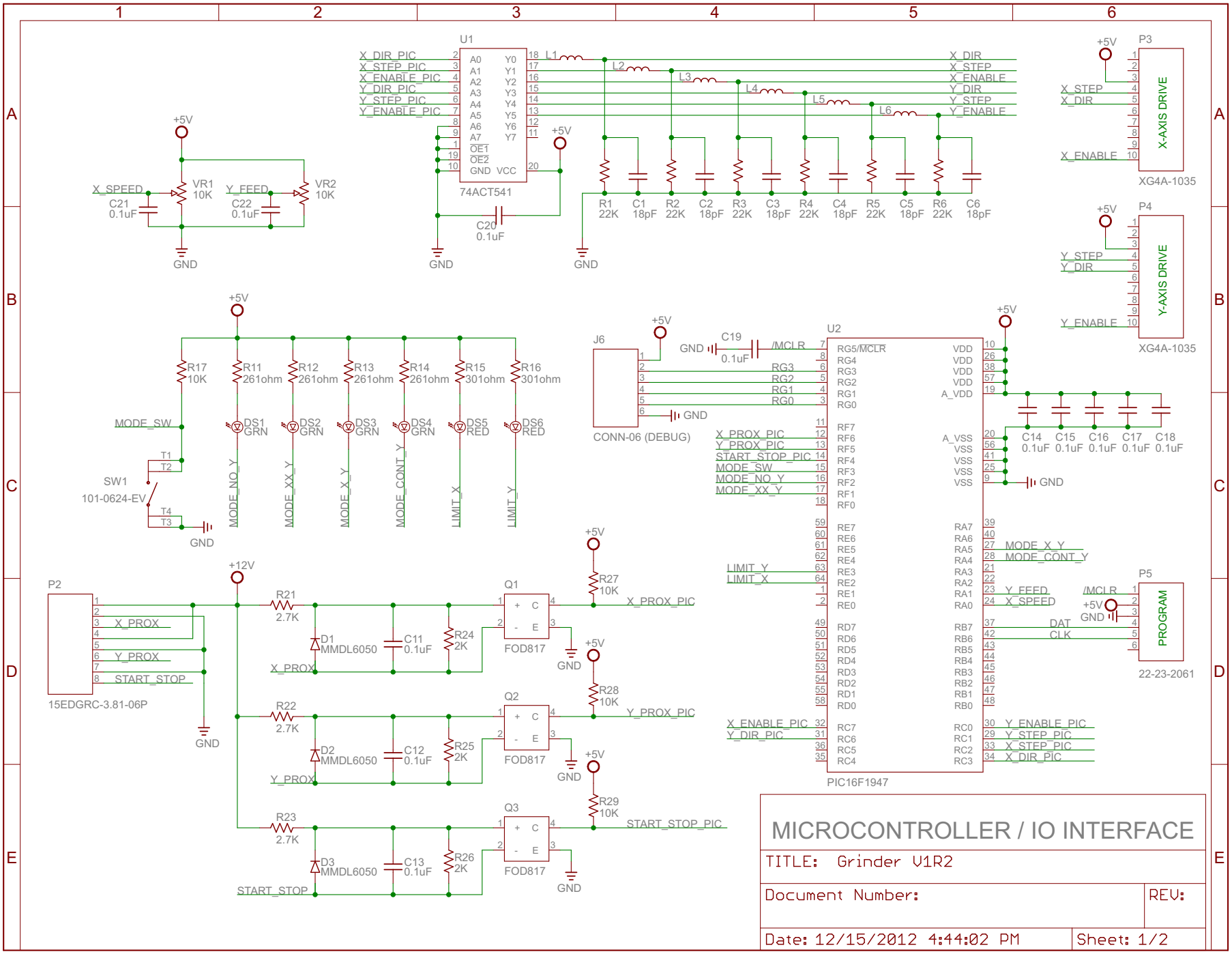
U1
74ACT541
X_DIR_PIC
X_STEP_PIC
X_ENABLE_PIC
Y_DIR_PIC
Y_STEP_PIC
Y_ENABLE_PIC
X_DIR
X_STEP
X_ENABLE
Y_DIR
Y_STEP
Y_ENABLE
P3
X-AXIS DRIVE
XG4A-1035
P4
Y-AXIS DRIVE
XG4A-1035
X_SPEED
Y_FEED
VR1 10K
VR2 10K
C21 0.1uF
C22 0.1uF
C20 0.1uF
R1 22K
C1 18pF
R2 22K
C2 18pF
R3 22K
C3 18pF
R4 22K
C4 18pF
R5 22K
C5 18pF
R6 22K
C6 18pF
L1
L2
L3
L4
L5
L6
+5V
GND
R17 10K
R11 261ohm
R12 261ohm
R13 261ohm
R14 261ohm
R15 301ohm
R16 301ohm
DS1 GRN
DS2 GRN
DS3 GRN
DS4 GRN
DS5 RED
DS6 RED
MODE_SW
SW1
101-0624-EV
MODE_NO_Y
MODE_XX_Y
MODE_X_Y
MODE_CONT_Y
LIMIT_X
LIMIT_Y
J6
CONN-06 (DEBUG)
C19 0.1uF
/MCLR
U2
PIC16F1947
RG5/MCLR
RG4
RG3
RG2
RG1
RG0
RF7
RF6
RF5
RF4
RF3
RF2
RF1
RF0
RE7
RE6
RE5
RE4
RE3
RE2
RE1
RE0
RD7
RD6
RD5
RD4
RD3
RD2
RD1
RD0
RC7
RC6
RC5
RC4
VDD
A_VDD
A_VSS
VSS
RA7
RA6
RA5
RA4
RA3
RA2
RA1
RA0
RB7
RB6
RB5
RB4
RB3
RB2
RB1
RB0
RC0
RC1
RC2
RC3
C14 0.1uF
C15 0.1uF
C16 0.1uF
C17 0.1uF
C18 0.1uF
X_PROX_PIC
Y_PROX_PIC
START_STOP_PIC
MODE_SW
MODE_NO_Y
MODE_XX_Y
LIMIT_Y
LIMIT_X
MODE_X_Y
MODE_CONT_Y
Y_FEED
X_SPEED
DAT
CLK
X_ENABLE_PIC
Y_DIR_PIC
Y_ENABLE_PIC
Y_STEP_PIC
X_STEP_PIC
X_DIR_PIC
P5
PROGRAM
22-23-2061
P2
15EDGRC-3.81-06P
X_PROX
Y_PROX
START_STOP
+12V
R21 2.7K
R22 2.7K
R23 2.7K
D1 MMDL6050
D2 MMDL6050
D3 MMDL6050
C11 0.1uF
C12 0.1uF
C13 0.1uF
R24 2K
R25 2K
R26 2K
Q1
Q2
Q3
FOD817
R27 10K
R28 10K
R29 10K
MICROCONTROLLER / IO INTERFACE
TITLE: Grinder V1R2
Document Number:
REV:
Date: 12/15/2012 4:44:02 PM
Sheet: 1/2

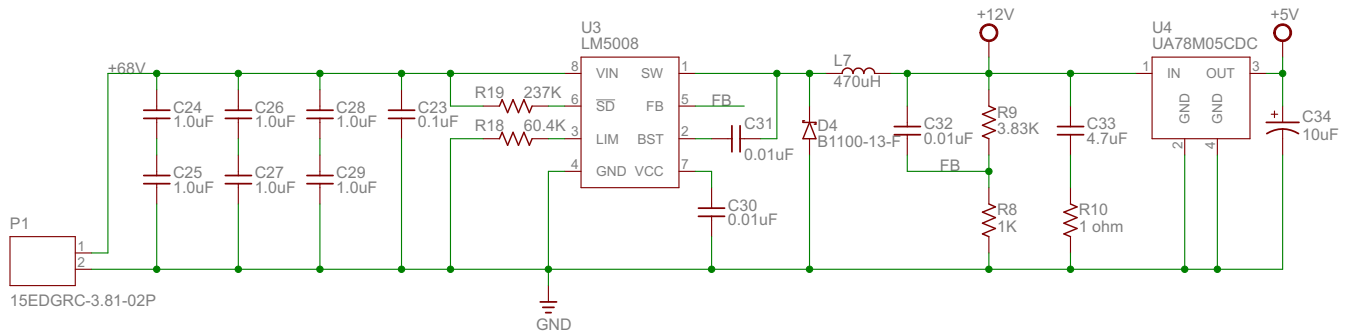

DC POWER REGULATION

TITLE: Grinder V1R2

Document Number:

REV:

Date: 12/15/2012 4:44:02 PM

Sheet: 2/2