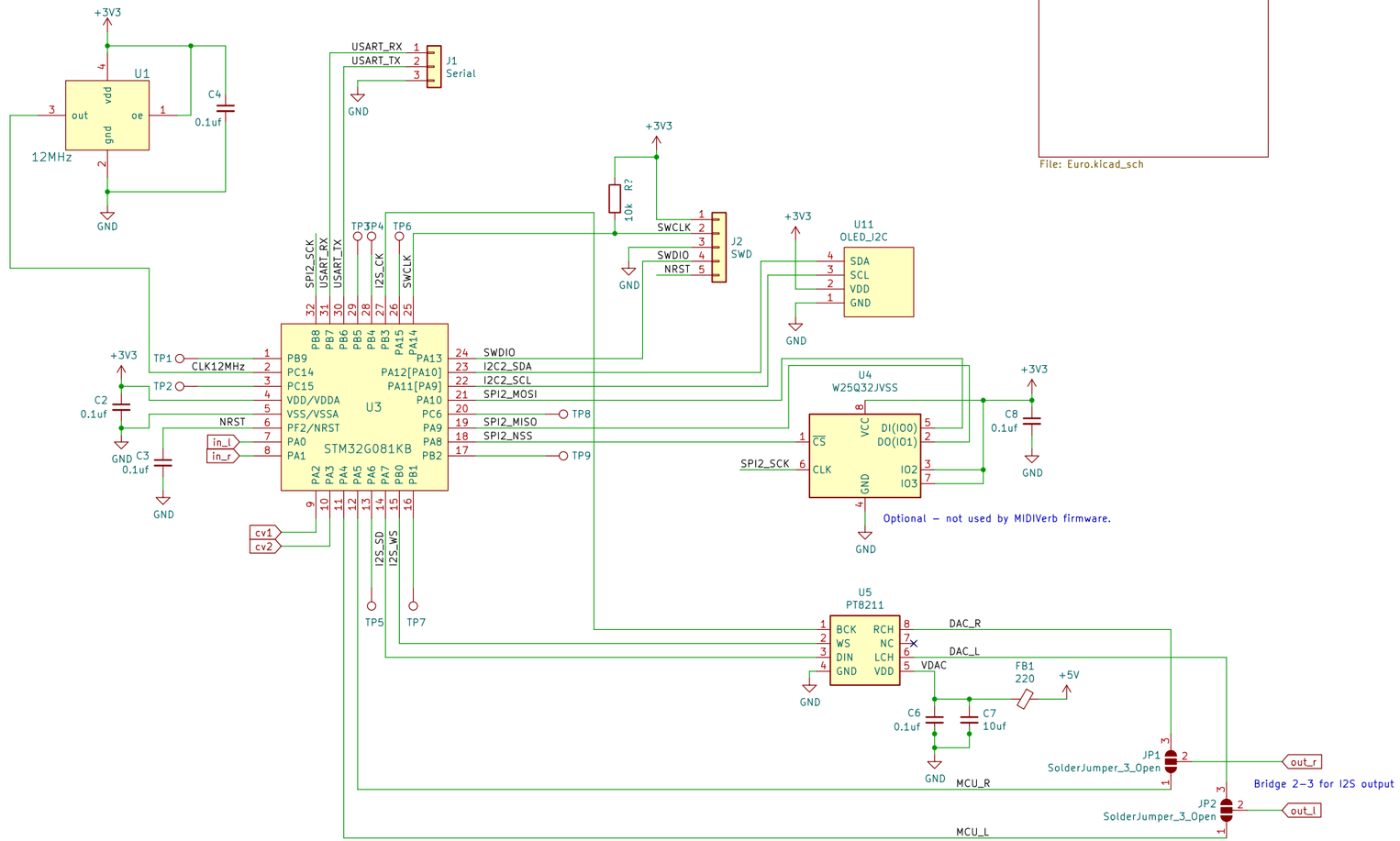

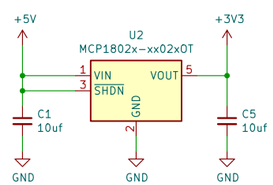

Sheet: /
File: g081_audio.kicad_sch

Title: G081_Audio

Size: B	Date: 2021-09-28	Rev: –
KiCad E.D.A. 8.0.9		Id: 1/2

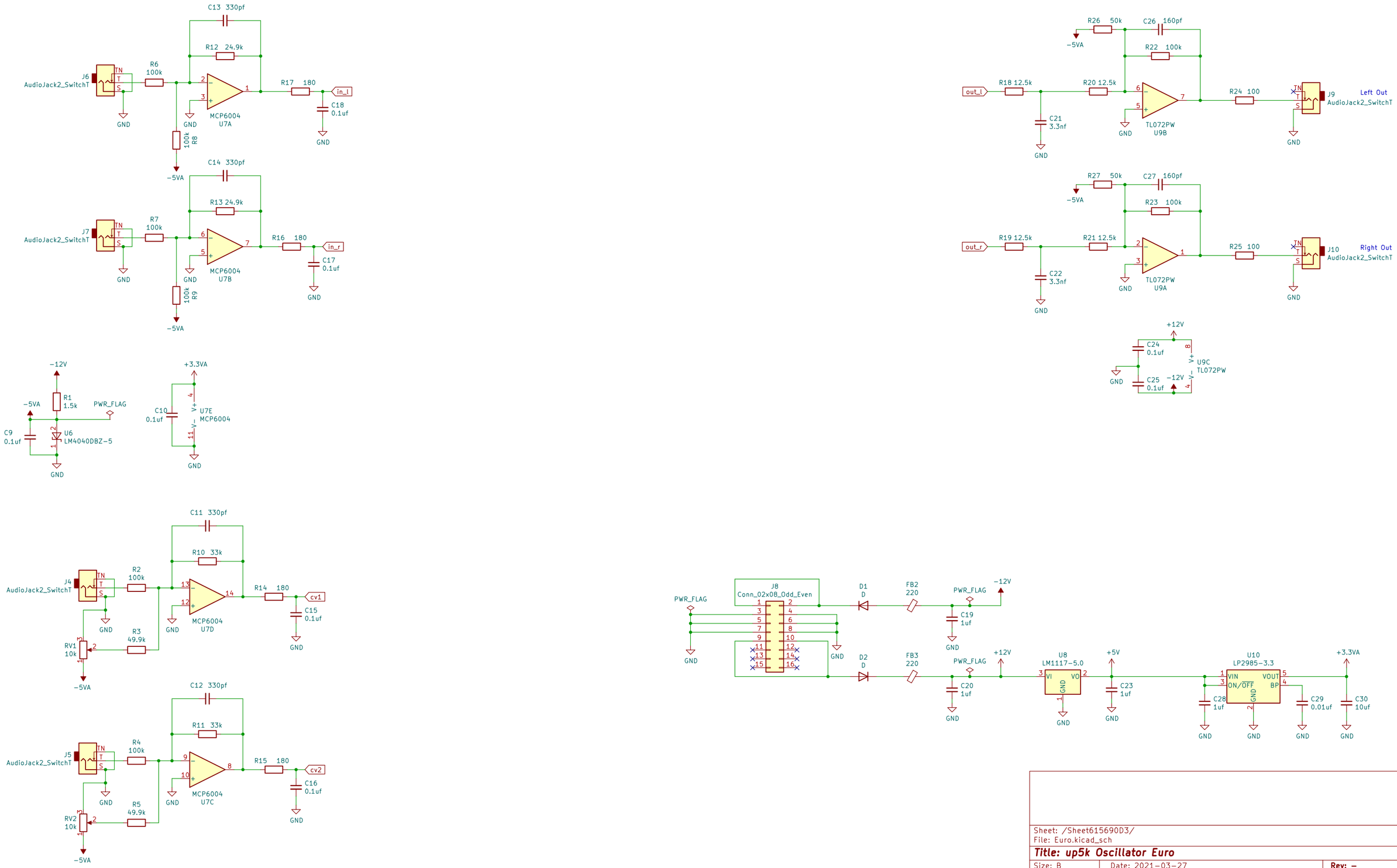

Sheet: /Sheet615690D3/
File: Euro.kicad_sch

Title: up5k Oscillator Euro

Size: B	Date: 2021-03-27	Rev: –
KiCad E.D.A. 8.0.9		Id: 2/2