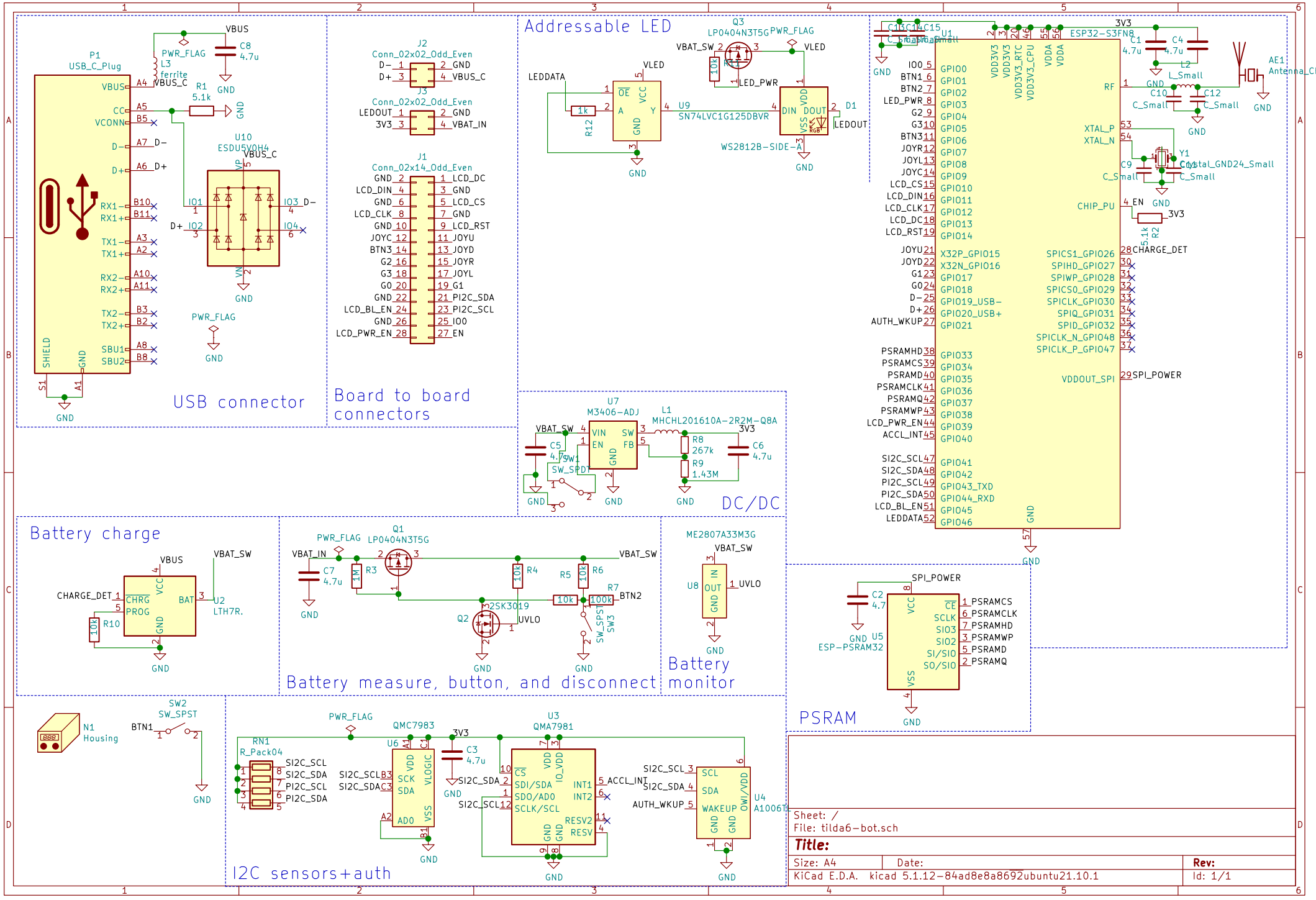
USB connector
Board to board connectors
Addressable LED
DC/DC
Battery charge
Battery measure, button, and disconnect
Battery monitor
PSRAM
I2C sensors+auth
P1 USB_C_Plug
J2 Conn_02x02_Odd_Even
J3 Conn_02x02_Odd_Even
J1 Conn_02x14_Odd_Even
U10 ESDU5V0H4
Q3 LP0404N3T5G
U9 SN74LVC1G125DBVR
D1 WS2812B-SIDE-A
U1 ESP32-S3FN8
AE1 Antenna_Chip
Y1 Crystal_GND24_Small
U7 M3406-ADJ
L1 MHCHL201610A-2R2M-Q8A
U2 LTH7R.
Q1 LP0404N3T5G
Q2 2SK3019
U8 ME2807A33M3G
U5 ESP-PSRAM32
N1 Housing
SW2 SW_SPST
RN1 R_Pack04
U6 QMC7983
U3 QMA7981
U4 A1006
Sheet: /
File: tilda6-bot.sch
Title:
Size: A4
Date:
Rev:
KiCad E.D.A. kicad 5.1.12-84ad8e8a8692ubuntu21.10.1
Id: 1/1