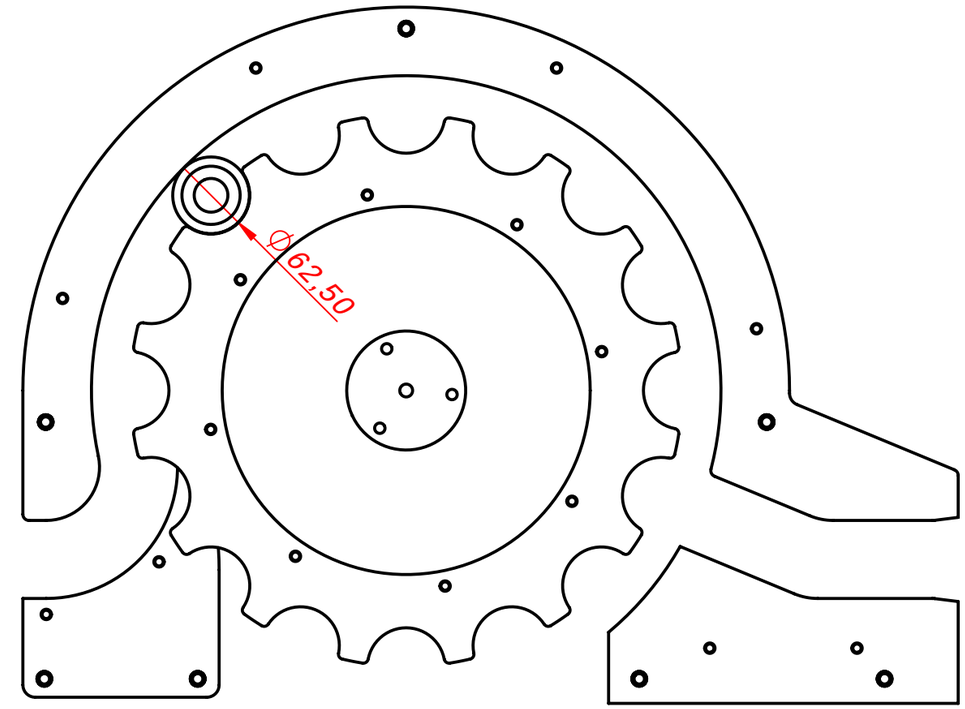

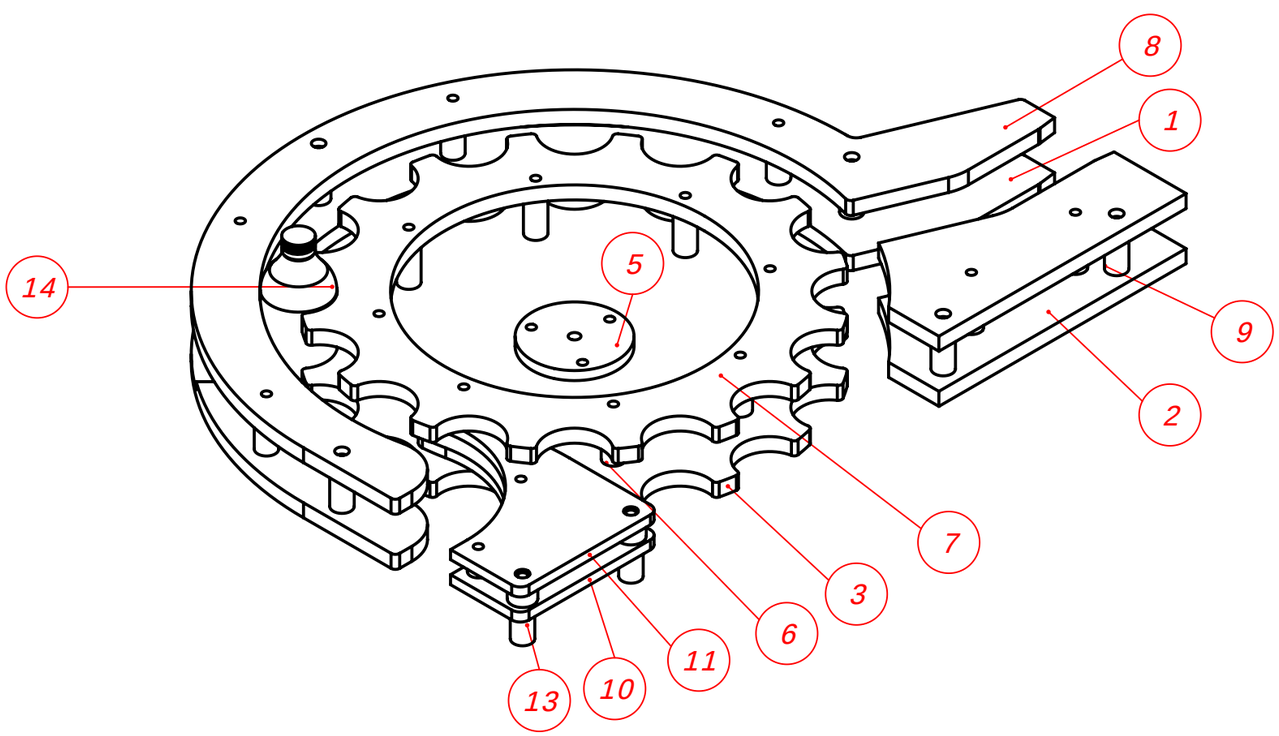

¥ĶE NO.	PAR¢A NUMARASI	Parca adĕ	MĸKT.
1	100548-12-00-01	KARĹI YILDIZ	1
2	100548-12-00-03	GĸRĸĹ YILDIZI	2
3	100548-12-00-07	ALT G¥BEK YILDIZI	1
4	100548-12-00-04	ALT FLANĹ	1
5	100548-12-00-05	FLANĹ	1
6	100548-12-00-08	¢IKIĹ YILDIZI ARA BURCU	14
7	100548-12-00-06	¦ST G¥BEK YILDIZI	1
8	100548-12-00-02	KARĹI YILDIZ	1
9	100548-12-00-12	ARA BUR¢	5
10	100548-12-00-13	¢IKIĹ YILDIZI	1
11	100548-12-00-11	¢IKIĹ YILDIZI	1
12	100548-12-00-09	ARA BUR¢	3
13	100548-12-00-10	BAĶLANTI BURCU	2
14	100548-12-250cc ĺiĺe		1