¥ĶE NO.	SW-Dosya Adï(File Name)	TANIM	MĸKT.
1	a5-54-22	TKK-B-022x47	1
2	A5-54-16		1
3	AM8042-xx10		1
4	C101-05-03-02	KIZIL BURC	7
5	C101-05-03-03	ANAHTAR AGIZLI MIL	1
6	C118-02-00-11	YAN PLAKA	1
7	C118-02-00-12	YAN PLAKA	1
8	C118-02-00-18	SILINDIR BAG ASKILIGI	2
9	C118-02-00-20	SILINDIR BAG ARA CUBUKLARI	9
10	*C129-02-00-26*	*MOTOR PLAKASI*	*1*
11	*C129-02-00-32*	*REDĶKT¥R FLANĶI*	*1*
12	*C129-02-00-33*	*GERGĶ PLAKASI*	*1*
13	C141-02-00-01	SILINIR BAGLANTI PALAKASI	1
14	C141-02-00-02	YATAKLAMA MILLERI	4
15	C141-02-00-04	PISTON BAGLANTI PLAKASI	1
16	C141-02-00-05	RULMAN YATAGI	1
17	C141-02-00-07	ĹAPKA	1
18	C141-02-00-08	HĸWĸN R20/10 H375	1
19	C141-02-00-10	ARA FLANĹ	4
20	C141-02-00-14	ARA MĸL	2
21	C141-02-00-15	ACMA KAPAMA MILI	1
22	C141-02-00-16	PĸSTON UZATMA MĸLĸ	1
23	C141-02-00-17	BAĶLANTI TAKUZU	2
24	C141-02-00-19	SILINDIR BAG ASKILIGI	7
25	C141-02-00-21	SIKMA CĸVATASI	9
26	C141-02-00-22	SIKMA MĸLĸ	9
27	C141-02-00-24	AYAR MILI	7
28	C141-02-00-25	MĸL MUHAFAZASI	2
29	C141-02-00-28	T40-5M-15F (HTD 5M-15)	1
30	C141-02-00-29	T40-5M-15F (HTD 5M-15)	1
31	C143-02-00-01	YATAKLAMA FLANĹI	2
32	*C143-02-00-03*	*HAREKETLI YATAK*	*1*
33	C143-02-00-23	BUR¢	2
34	inafag_zm17_3sltl7t7yhxe35expc1fkwtfK_01		1
35	JUM_01_30_1	ĸGUS	2
36	LC 090 1 5 STD 80A1 CD 19 KE		1
37	SAMICK-LMK30LUU	OZEL BILYALI YATAK	4
38	xxx195584 CRSGS-M16x1,5 ---(0)	16X1.5 MAFSAL	1
39	25_25K2_FSC_Form_A		1
40	30203_J2		2
41	1366952_DSBC_50_100_PPVA_N3____0_		1
42	C143-02-01-00		8
43	SKF 30302_J2HIHI		2

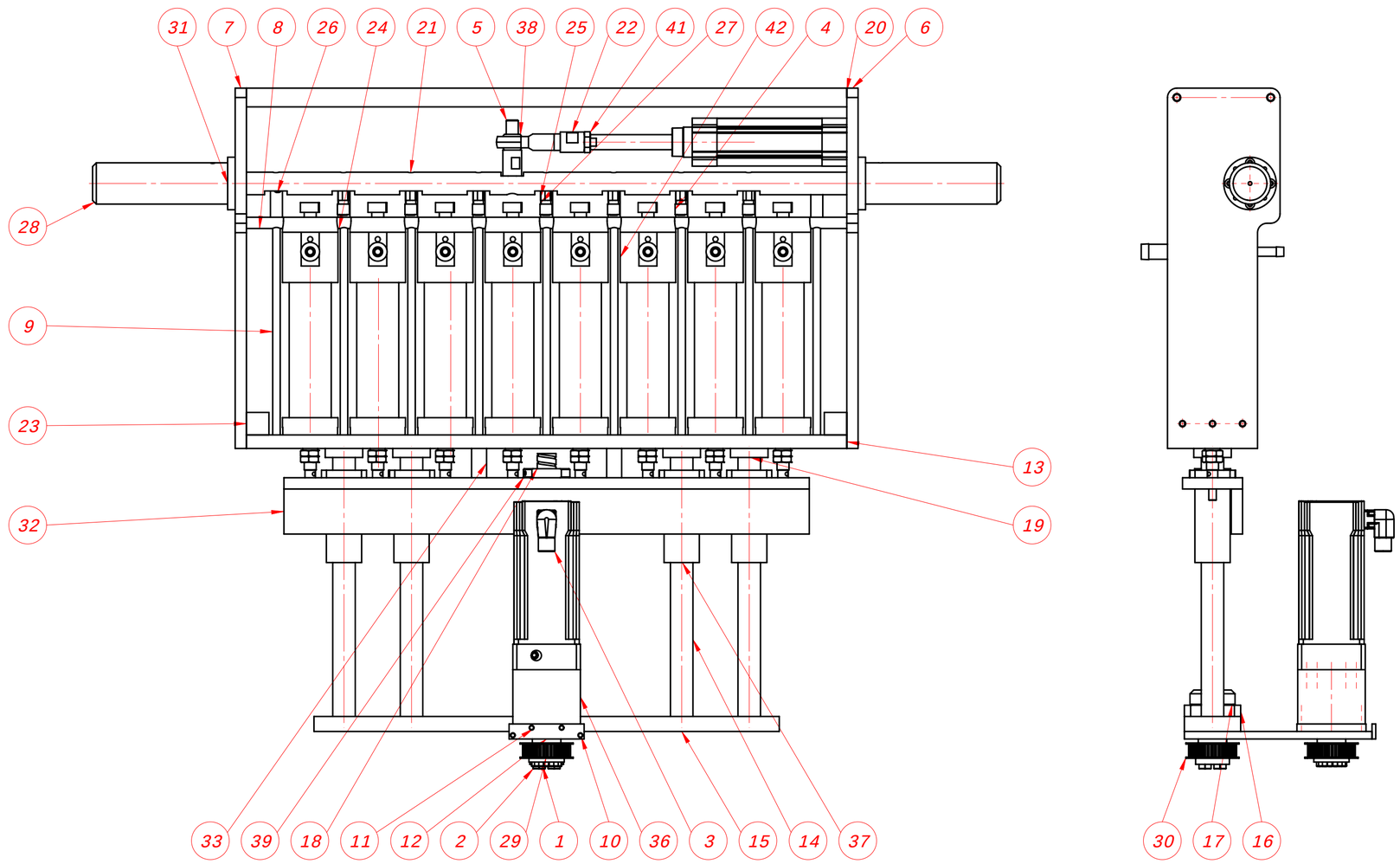

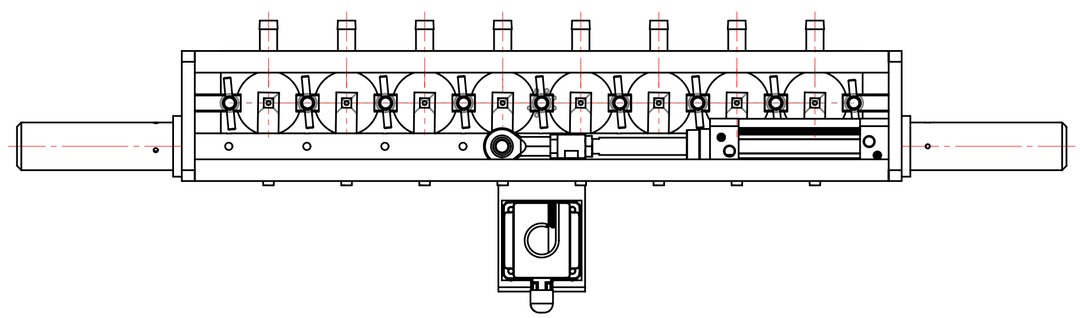

		250cc DOLUM ¦NĶTESĶ			
Mon Nr	Adet	Par-a Adï			Malzeme
Makine Tipi		Ķsim	Tarih	Ķmza	
M-ODM-A	¢izen	N. Sivrikaya	1 Tem 2020		ELEKTROMAG
	Kontrol	F. ķeker			
Mİ¿kteri Adï	N.Kontrol				
NOYEM	¥I-ek			Aĵırlık: gr	Resim No A2
	1:5			Revizyon	C143-02-00-00
					SHEET 1 OF 1

Resim ¿zerinden ºI-¿ almayınız !