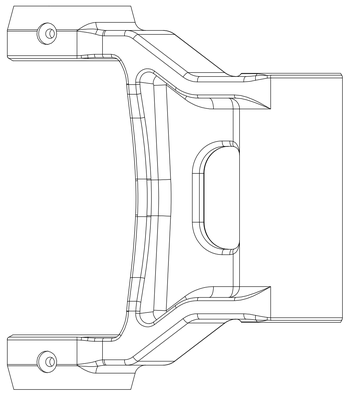

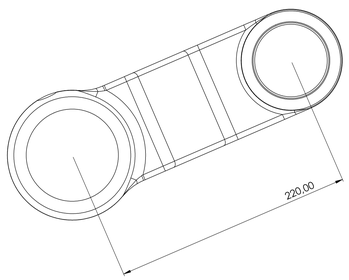

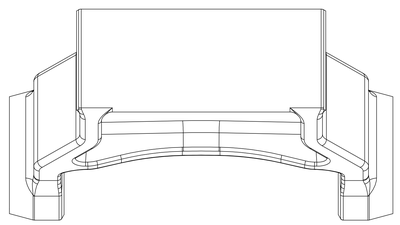

UNLESS OTHERWISE SPECIFIED: DIMENSIONS ARE IN MILLIMETERS SURFACE FINISH: TOLERANCES: LINEAR ANGULAR	FINISH:			DEBURR AND BREAK SHARP EDGES	DO NOT SCALE DRAWING	REVISION:
	NAME	SIGNATURE	DATE		TITLE:
DRAWN					
CHK'D					
APPV'D					
MFG					
Q.A.				MATERIAL:	DWG NO. MainBoomDogBoneMinor A3
				WEIGHT:	SCALE:1:2 SHEET 1 OF 1

SOLIDWORKS Educational Product. For Instructional Use Only.