ITEM NO.	PART NUMBER	DESCRIPTION	CLEANING INSTRUCTIONS	QTY.
1	Medical Air Filter Bottom	PURCHASED OR 3D PRINTED	CLEAN IN WATER WITH BLEACH AND LET THIS DRY BEFORE PUTTING ANOTHER FILTER.	1
2	Medical Air Filter Top	PURCHASED OR 3D PRINTED	CLEAN IN WATER WITH BLEACH AND LET THIS DRY BEFORE PUTTING ANOTHER FILTER.	1
3	Medical Air Filter	PURCHASE FOR SINGLE USE	REPLACE THIS COMPONENT AT THE END OF THE OPERATING CYCLE.	1
4	22mm to 0.25 inch pipe adapter	3D PRINTED	CLEAN IN WATER WITH BLEACH AND LET THIS DRY BEFORE PUTING ANOTHER FILTER.	2
5	Vanamatic-4130	PUCHASED	CLEAN IN WATER WITH BLEACH AND LET THIS DRY BEFORE PUTING ANOTHER FILTER.	2

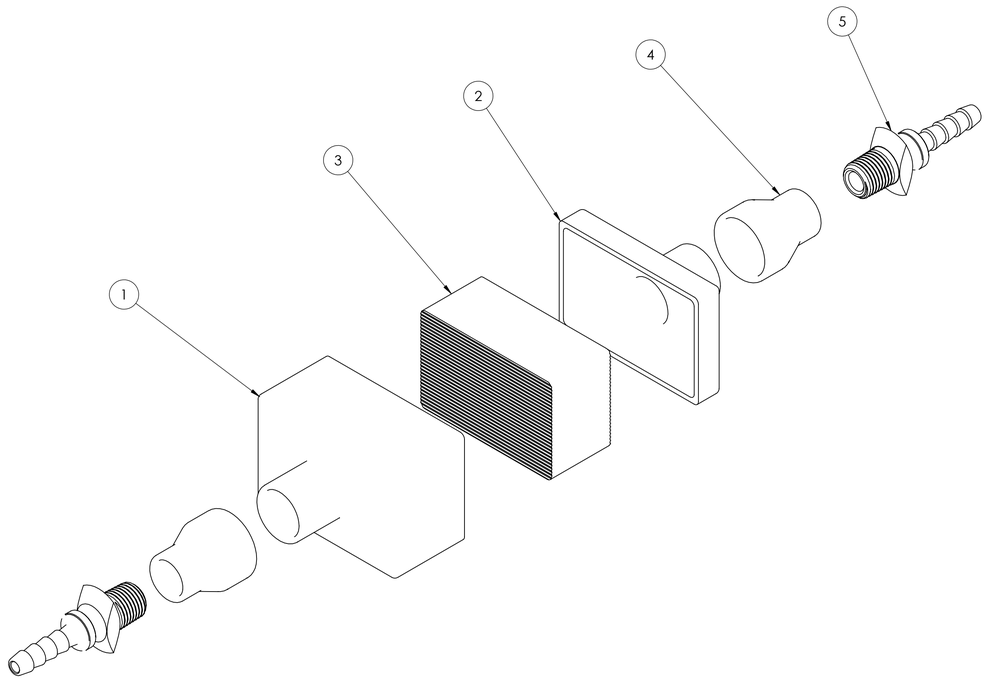

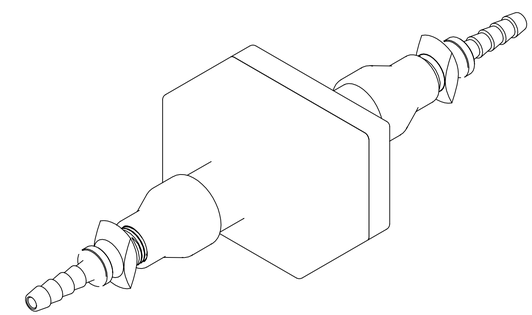

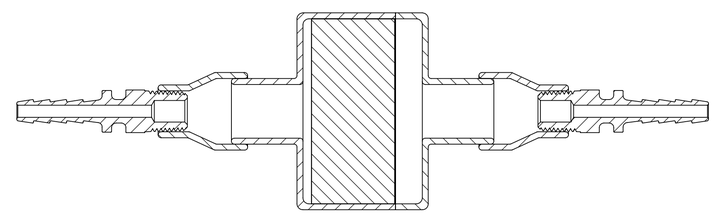

SECTION C-C

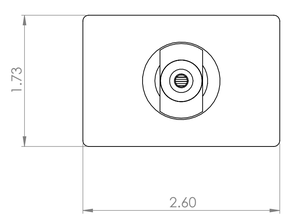

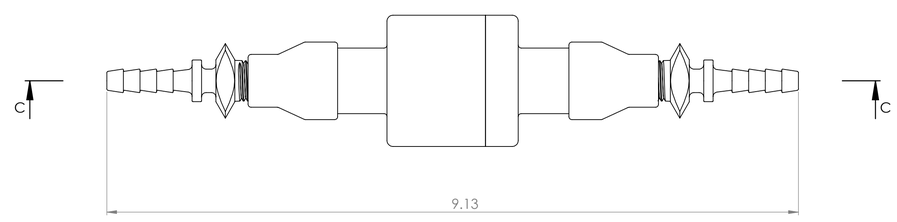

UNLESS OTHERWISE SPECIFIED:
DIMENSIONS ARE IN INCHES
TOLERANCES:
FRACTIONAL ±
ANGULAR: MACH ± BEND ±
TWO PLACE DECIMAL ±
THREE PLACE DECIMAL ±

	NAME	DATE
DRAWN	P.PORTELANCE	2020-03-31
CHECKED		
ENG APPR.		
MFG APPR.		
Q.A.		

COMMENTS:

TITLE:
Medical Air Filter Assy

SIZE D DWG. NO. REV

SCALE: 1:1 WEIGHT: SHEET 1 OF 1