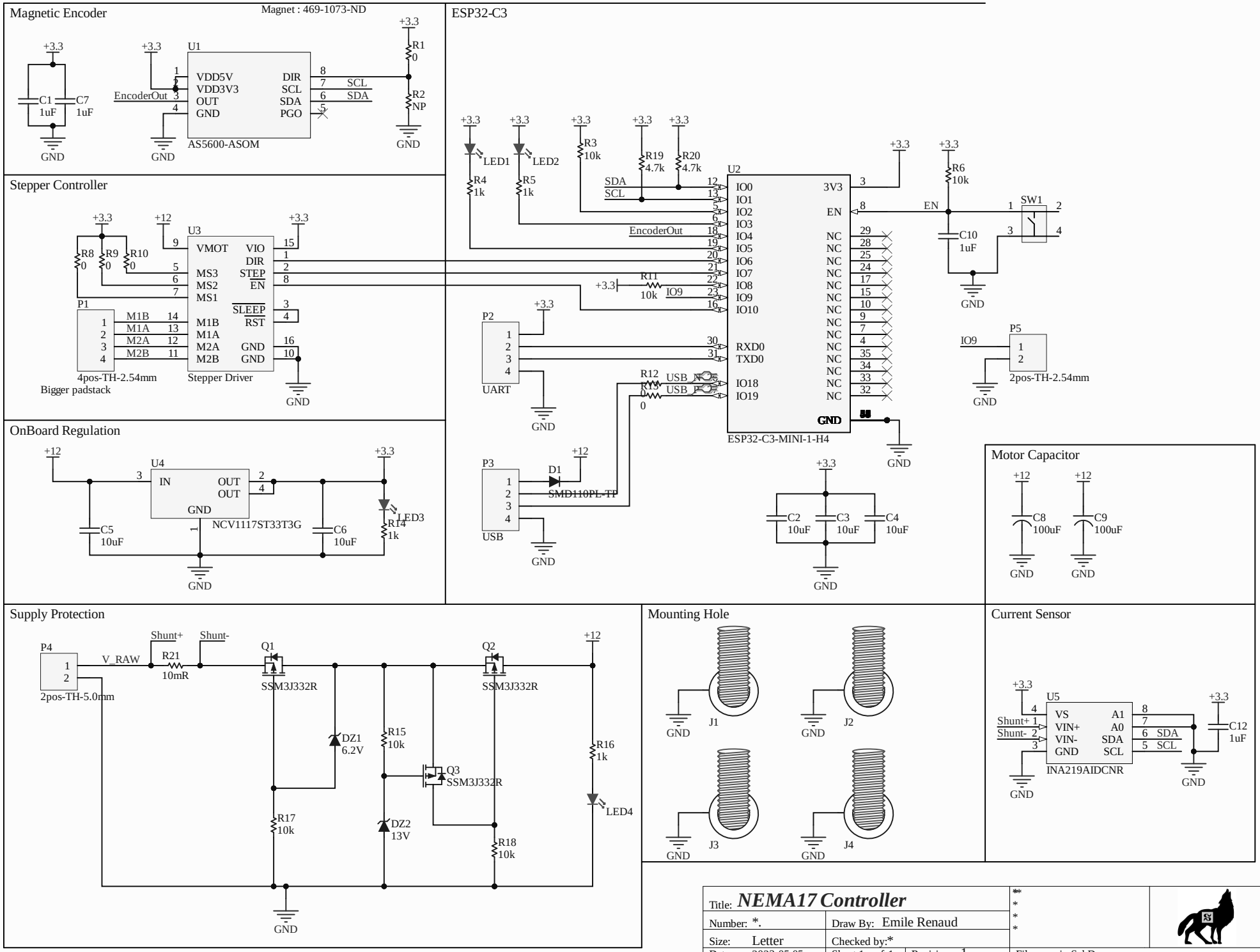
Magnetic Encoder
Magnet : 469-1073-ND
U1
VDD5V
VDD3V3
OUT
GND
DIR
SCL
SDA
PGO
EncoderOut
AS5600-ASOM
R1 0
R2 NP
C1 1uF
C7 1uF
Stepper Controller
U3
VMOT
VIO
DIR
MS3
MS2
MS1
STEP
EN
SLEEP
RST
M1B
M1A
M2A
M2B
GND
R8 0
R9 0
R10 0
P1
4pos-TH-2.54mm
Bigger padstack
Stepper Driver
OnBoard Regulation
U4
IN
OUT
NCV1117ST33T3G
C5 10uF
C6 10uF
LED3
R14 1k
ESP32-C3
U2
IO0
IO1
IO2
IO3
IO4
IO5
IO6
IO7
IO8
IO9
IO10
RXD0
TXD0
IO18
IO19
3V3
EN
NC
ESP32-C3-MINI-1-H4
LED1
LED2
R4 1k
R5 1k
R3 10k
R19 4.7k
R20 4.7k
R11 10k
R12 0
R13 0
USB_N
USB_P
R6 10k
C10 1uF
SW1
P2
UART
P3
USB
D1
SMD110PL-TP
C2 10uF
C3 10uF
C4 10uF
P5
2pos-TH-2.54mm
Motor Capacitor
C8 100uF
C9 100uF
Supply Protection
P4
2pos-TH-5.0mm
V_RAW
Shunt+
Shunt-
R21 10mR
Q1
SSM3J332R
Q2
SSM3J332R
Q3
SSM3J332R
DZ1 6.2V
DZ2 13V
R15 10k
R16 1k
R17 10k
R18 10k
LED4
Mounting Hole
J1
J2
J3
J4
Current Sensor
U5
VS
VIN+
VIN-
GND
A1
A0
SDA
SCL
INA219AIDCNR
C12 1uF
Title: NEMA17 Controller
Number: *.
Draw By: Emile Renaud
Size: Letter
Checked by:*
Date: 2023-05-05
Sheet 1 of 1
Revision: 1
File: main.SchDoc