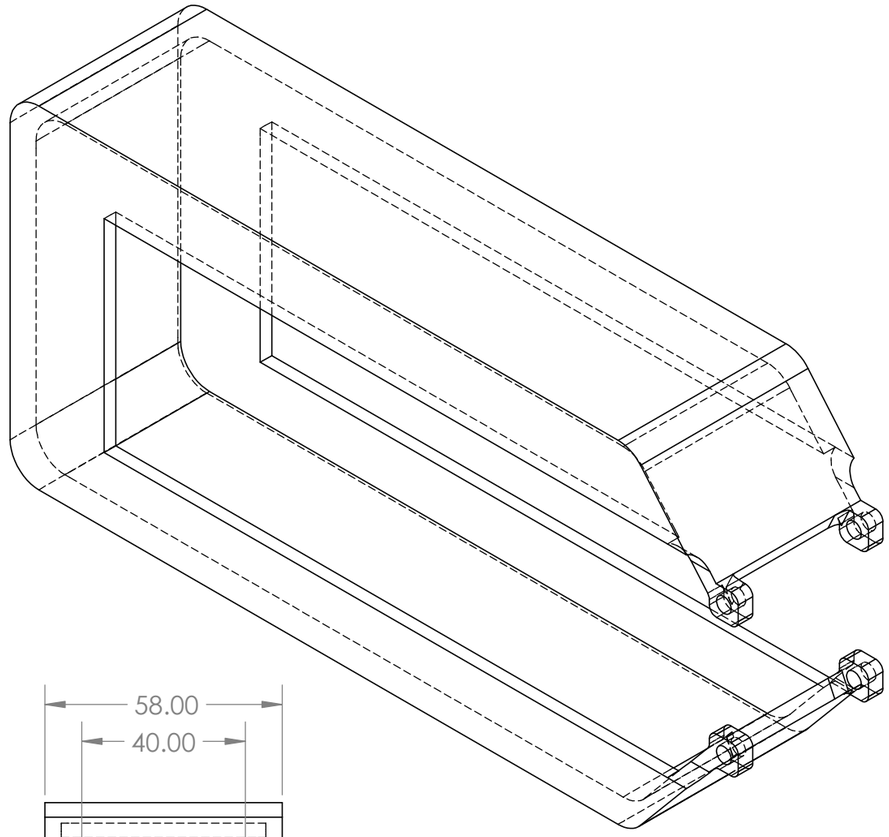

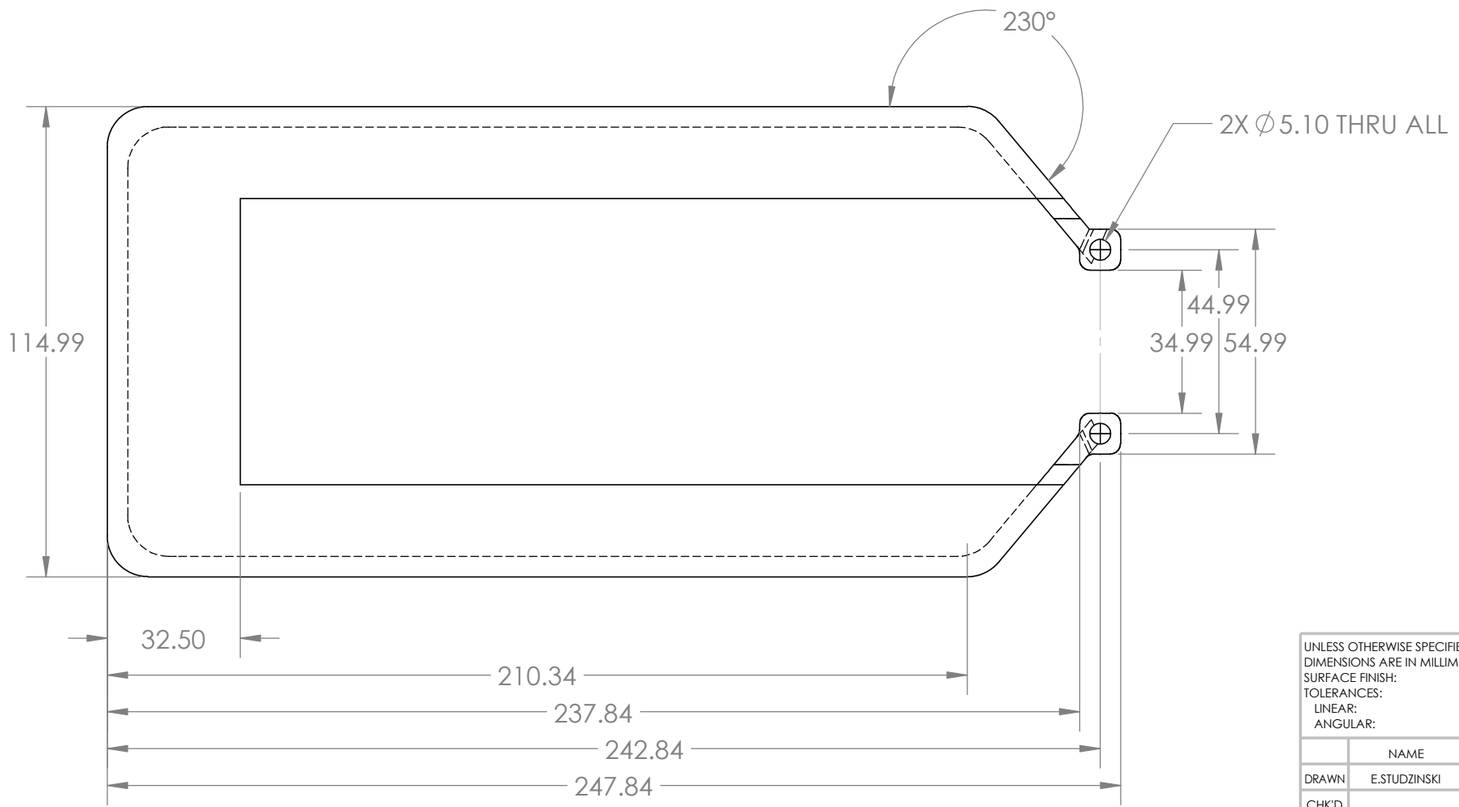

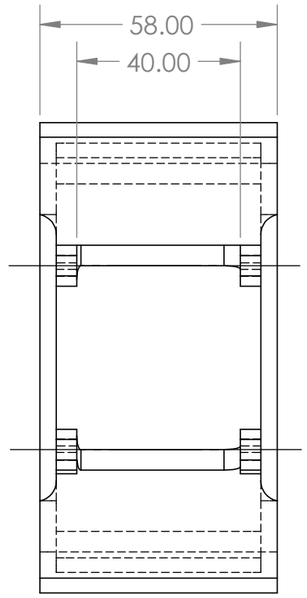

UNLESS OTHERWISE SPECIFIED: DIMENSIONS ARE IN MILLIMETERS SURFACE FINISH: TOLERANCES: LINEAR: ANGULAR:	FINISH:			DEBURR AND BREAK SHARP EDGES	DO NOT SCALE DRAWING	REVISION A
	NAME	SIGNATURE	DATE		TITLE: Left Gear Shield	
DRAWN	E.STUDZINSKI		2021-04-03			
CHK'D						
APPV'D						
MFG						
Q.A				MATERIAL: PLA PLASTIC	DWG NO. Intermediate_LeftGearShield	A3
				WEIGHT:	SCALE:2:3	SHEET 1 OF 1

SOLIDWORKS Educational Product. For Instructional Use Only.