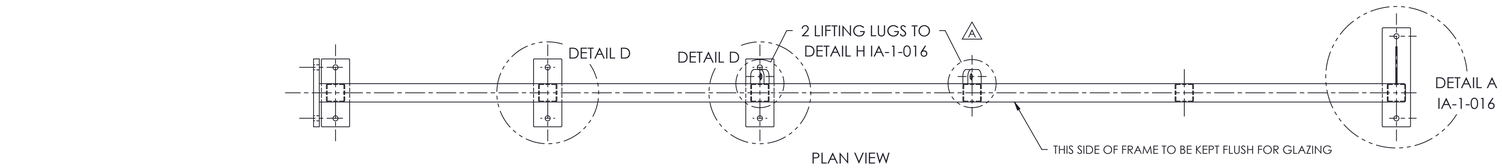

PLAN VIEW

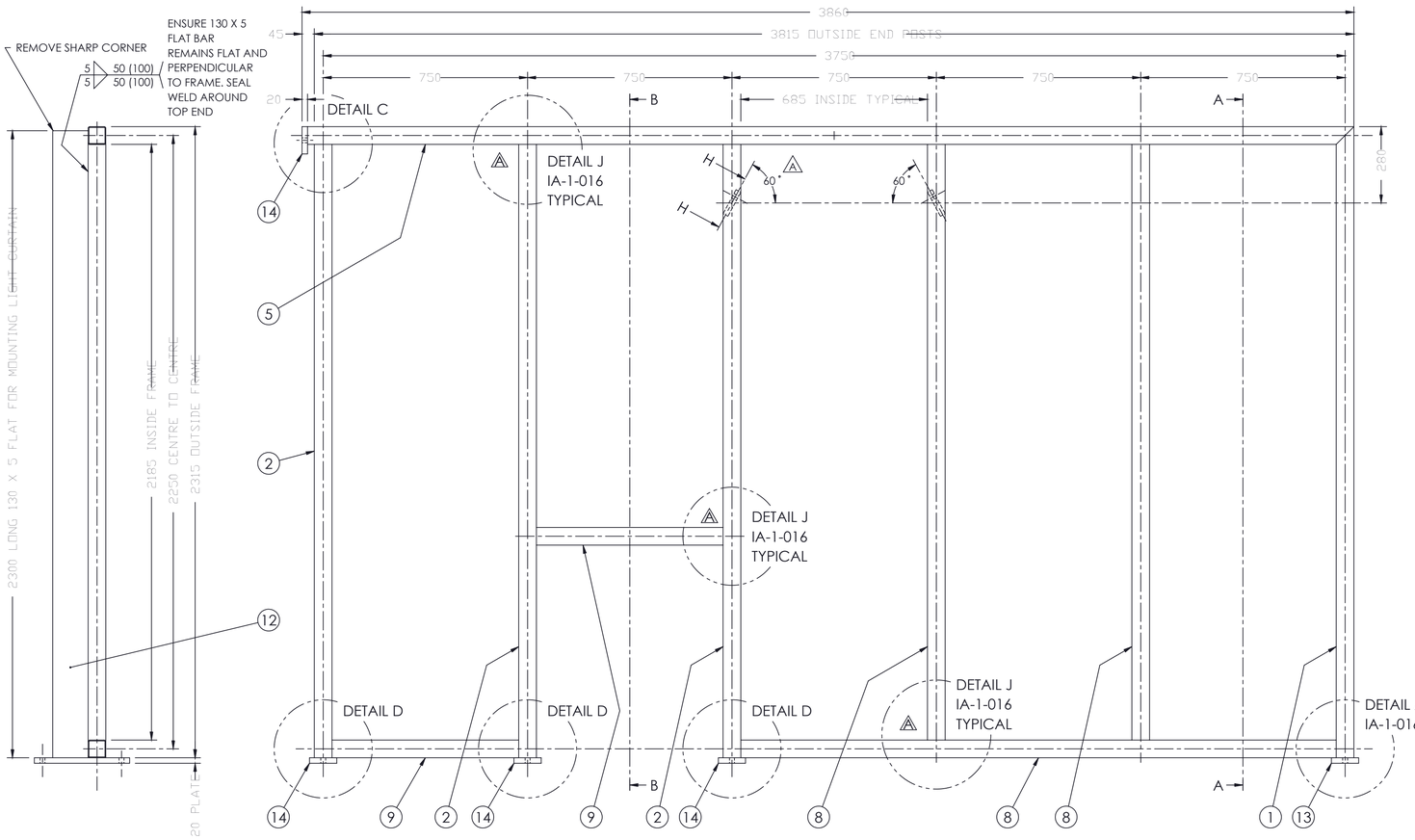

SECTION AA

WESTERN ELEVATION

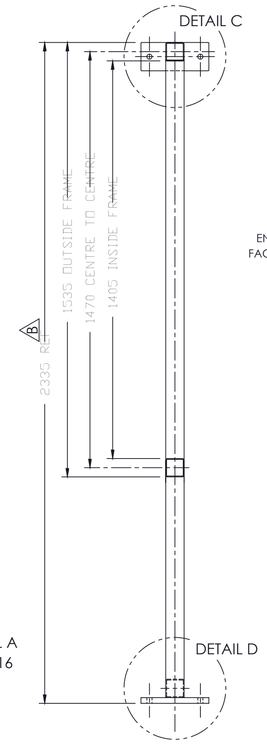

SECTION BB

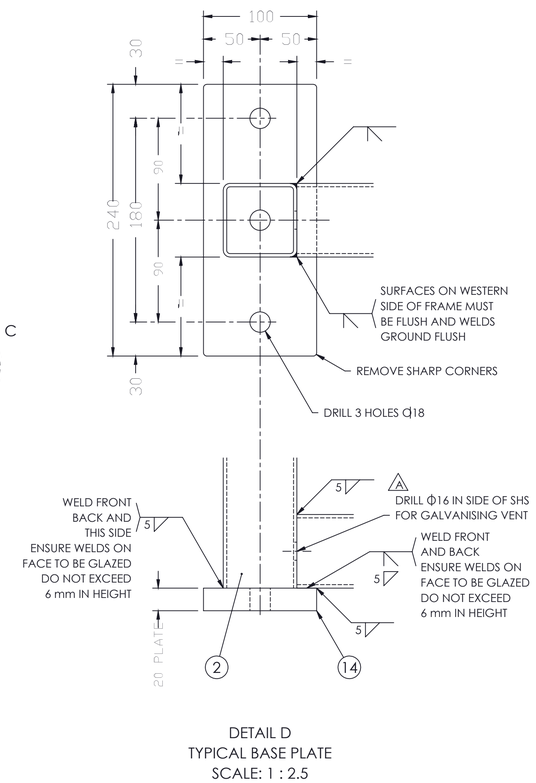

DETAIL D
TYPICAL BASE PLATE
SCALE: 1 : 2.5
NOTE: THIS DETAIL IS OPPOSITE
HANDED FOR ONE POST

NOTES:

1. 9.5 mm POLYCARBONATE SHEETS WILL BE FITTED TO WESTERN FACE OF FRAMEWORK USING CAPRAL 406 ST LUCIA GLAZING BARS. THE WESTERN FACE OF THE FRAME MUST BE KEPT FLAT WITH FLUSH JOINTS AND WELDS GROUND FLUSH.
2. ENSURE LONGITUDINAL RESISTANCE WELDS IN SHS ARE NOT LOCATED IN WESTERN FACE OF FRAME.
3. ENSURE FRAMES ARE HELD SQUARE DURING WELDING.
4. WELDS ARE 5 mm FILLETS OR FULL PENETRATION BUTT WELDS UNLESS SHOWN OTHERWISE. WELDS SHOULD FULLY SEAL JOINT.
5. REMOVE ALL SHARP CORNERS AND EDGES.
6. REMOVE ALL WELD SPATTER.
7. MAINTAIN 2MM TOLERANCE ON FRAME AND DIAGONALS.
8. ENSURE ALL HOLLOW SECTIONS ARE VENTED FOR GALVANISING. HOLES IN SHS TO BE Ø16 TO TAKE NYLON HOLE PLUGS (FARNELL 582-141).

RELATED DRAWINGS:
IA-1-016 PUMA ROBOTS EASTERN FRAME
IA-1-018 ABB IRB 2400/10 SOUTHERN FRAME
ML-001 BILL OF MATERIALS

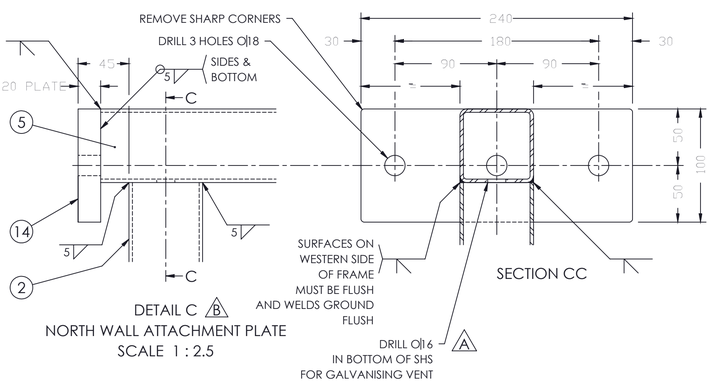

DETAIL C
NORTH WALL ATTACHMENT PLATE
SCALE 1 : 2.5

SECTION CC

REV NO	REVISION	DRAWN BY	CHECK BY	DATE
B	WALL PLATE MADE FLUSH WITH TOP OF FRAME TO REDUCE OVERALL HEIGHT	J.S.		JANUARY 2004
A	LIFTING LUGS MOVED. GALVANISING VENTS ADDED.	J.S.		JANUARY 2004

DIMENSIONS IN MILLIMETRES
DO NOT SCALE

DRAWN	J. SANDERSON	JANUARY 2002
CHECKED		
APPROVED		
MASS	151 kg FRAME ONLY 253 kg GLAZED WITH 9.5 mm POLYCARBONATE	

UNIVERSITY OF NEW SOUTH WALES
SCHOOL OF MECHANICAL ENGINEERING
MECHATRONICS LABORATORIES

FRAMEWORK TO SUPPORT LIGHT CURTAINS AND POLYCARBONATE ROBOT GUARDING
ABB IRB 2400/10 WESTERN FRAME

SCALE	DRAWING NUMBER	REVISION	SHEET SIZE
1 : 10 & 1 : 2.5	IA-1-017	B	A1

SOLIDWORKS Educational Product. For Instructional Use Only.