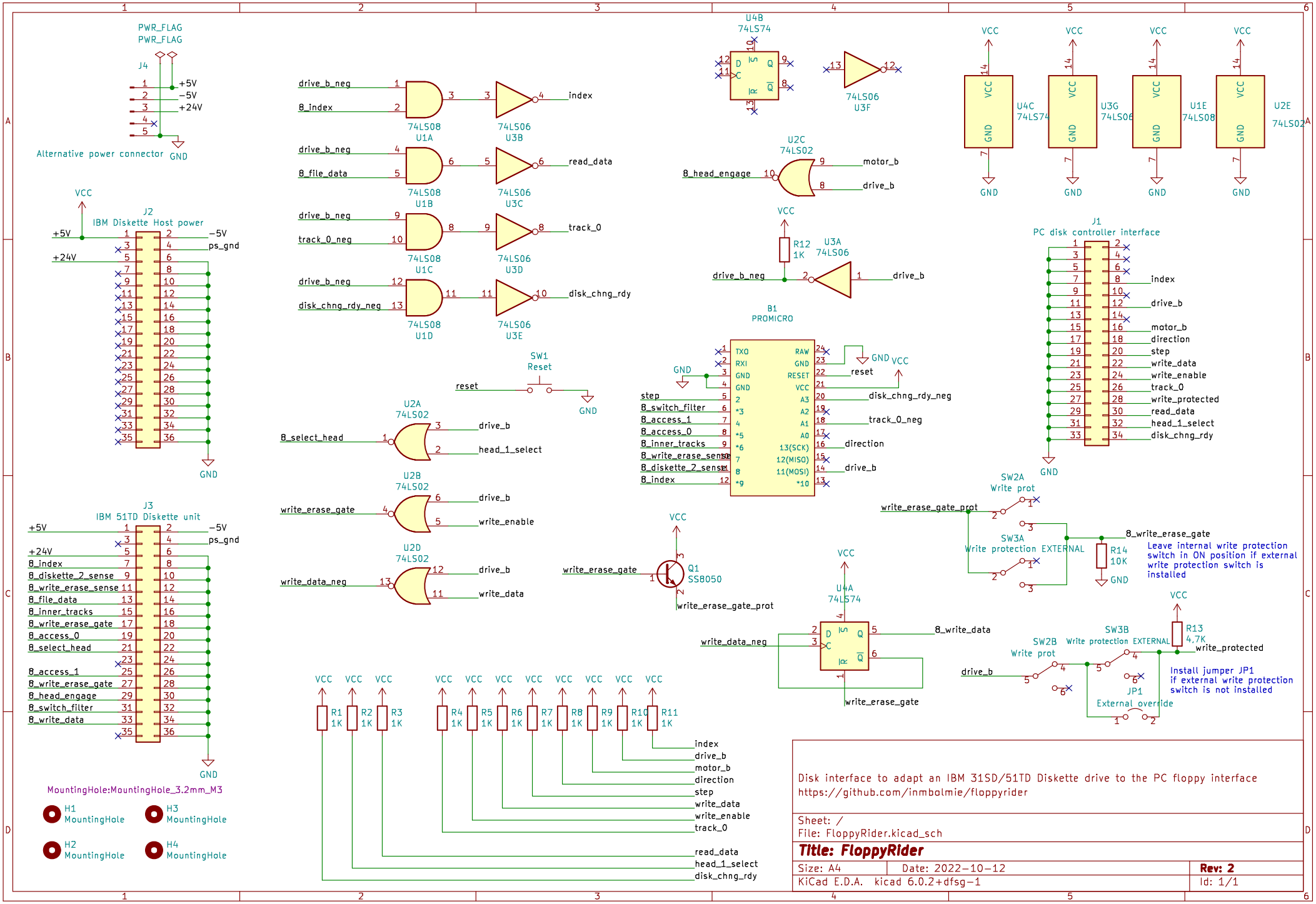
PWR_FLAG
PWR_FLAG
J4
+5V
−5V
+24V
GND
Alternative power connector
VCC
J2
IBM Diskette Host power
+5V
+24V
−5V
ps_gnd
GND
J3
IBM 51TD Diskette unit
+5V
+24V
−5V
ps_gnd
8_index
8_diskette_2_sense
8_write_erase_sense
8_file_data
8_inner_tracks
8_write_erase_gate
8_access_0
8_select_head
8_access_1
8_write_erase_gate
8_head_engage
8_switch_filter
8_write_data
GND
MountingHole:MountingHole_3.2mm_M3
H1 MountingHole
H3 MountingHole
H2 MountingHole
H4 MountingHole
drive_b_neg
8_index
74LS08 U1A
74LS06 U3B
index
drive_b_neg
8_file_data
74LS08 U1B
74LS06 U3C
read_data
drive_b_neg
track_0_neg
74LS08 U1C
74LS06 U3D
track_0
drive_b_neg
disk_chng_rdy_neg
74LS08 U1D
74LS06 U3E
disk_chng_rdy
U4B
74LS74
74LS06
U3F
U2C
74LS02
8_head_engage
motor_b
drive_b
R12
1K
U3A
74LS06
drive_b_neg
drive_b
U4C 74LS74
U3G 74LS06
U1E 74LS08
U2E 74LS02
B1
PROMICRO
TXO
RXI
GND
GND
2
*3
4
*5
*6
7
8
*9
RAW
GND
RESET
VCC
A3
A2
A1
A0
13(SCK)
12(MISO)
11(MOSI)
*10
GND
reset
disk_chng_rdy_neg
track_0_neg
direction
drive_b
step
8_switch_filter
8_access_1
8_access_0
8_inner_tracks
8_write_erase_sense
8_diskette_2_sense
8_index
SW1
Reset
reset
GND
U2A
74LS02
8_select_head
drive_b
head_1_select
U2B
74LS02
write_erase_gate
drive_b
write_enable
U2D
74LS02
write_data_neg
drive_b
write_data
Q1
SS8050
write_erase_gate
write_erase_gate_prot
U4A
74LS74
write_data_neg
8_write_data
write_erase_gate
J1
PC disk controller interface
index
drive_b
motor_b
direction
step
write_data
write_enable
track_0
write_protected
read_data
head_1_select
disk_chng_rdy
SW2A
Write prot
write_erase_gate_prot
SW3A
Write protection EXTERNAL
8_write_erase_gate
R14
10K
Leave internal write protection switch in ON position if external write protection switch is installed
SW2B
Write prot
drive_b
SW3B
Write protection EXTERNAL
R13
4.7K
write_protected
JP1
External override
Install jumper JP1 if external write protection switch is not installed
R1 1K
R2 1K
R3 1K
R4 1K
R5 1K
R6 1K
R7 1K
R8 1K
R9 1K
R10 1K
R11 1K
index
drive_b
motor_b
direction
step
write_data
write_enable
track_0
read_data
head_1_select
disk_chng_rdy
Disk interface to adapt an IBM 31SD/51TD Diskette drive to the PC floppy interface
https://github.com/inmbolmie/floppyrider
Sheet: /
File: FloppyRider.kicad_sch
Title: FloppyRider
Size: A4
Date: 2022-10-12
Rev: 2
KiCad E.D.A. kicad 6.0.2+dfsg-1
Id: 1/1