A-A (1 : 1)

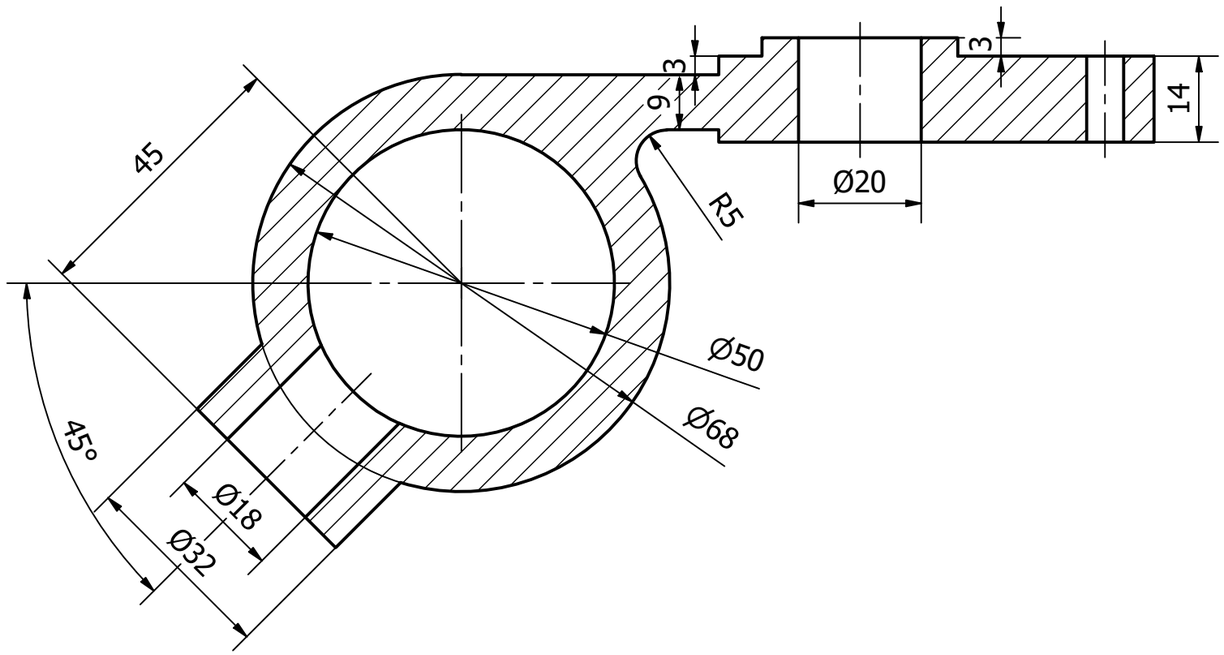

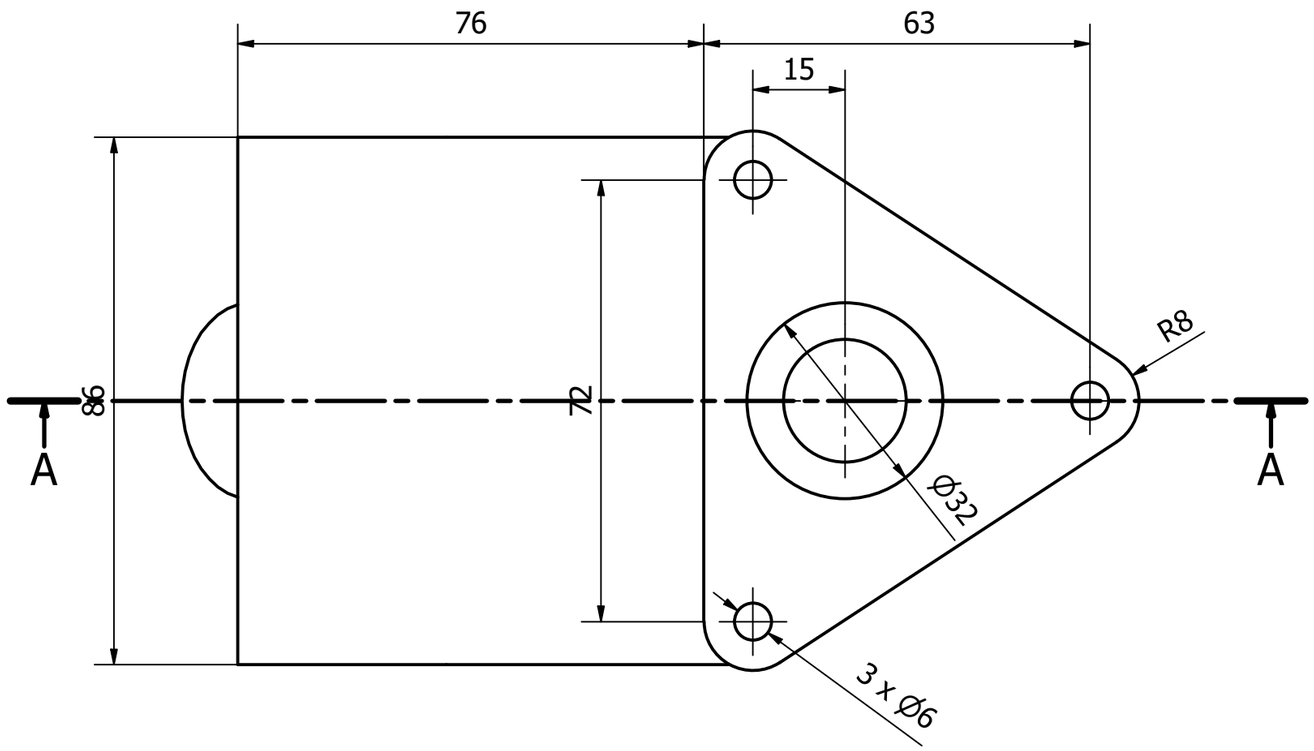

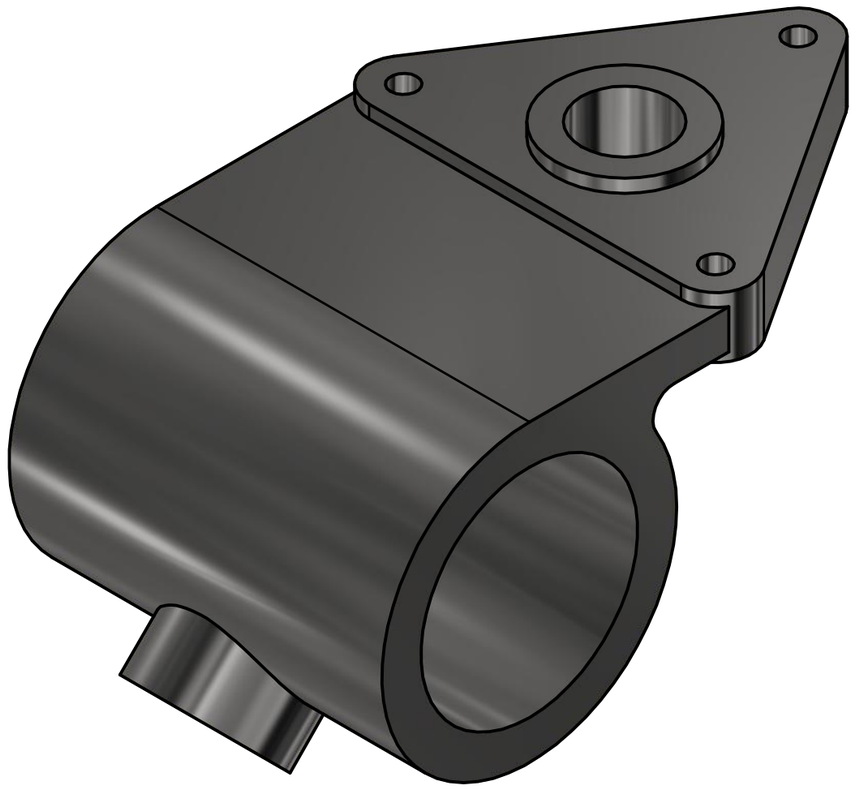

Designed by	Checked by	Approved by	Date	Date	
Vlado				6/3/2022	

M54	Edition	Sheet 1 / 1