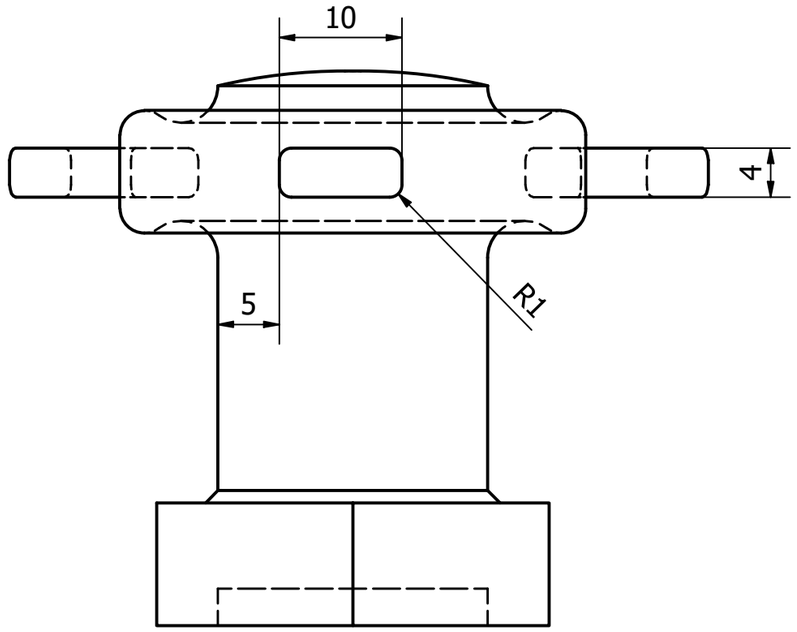

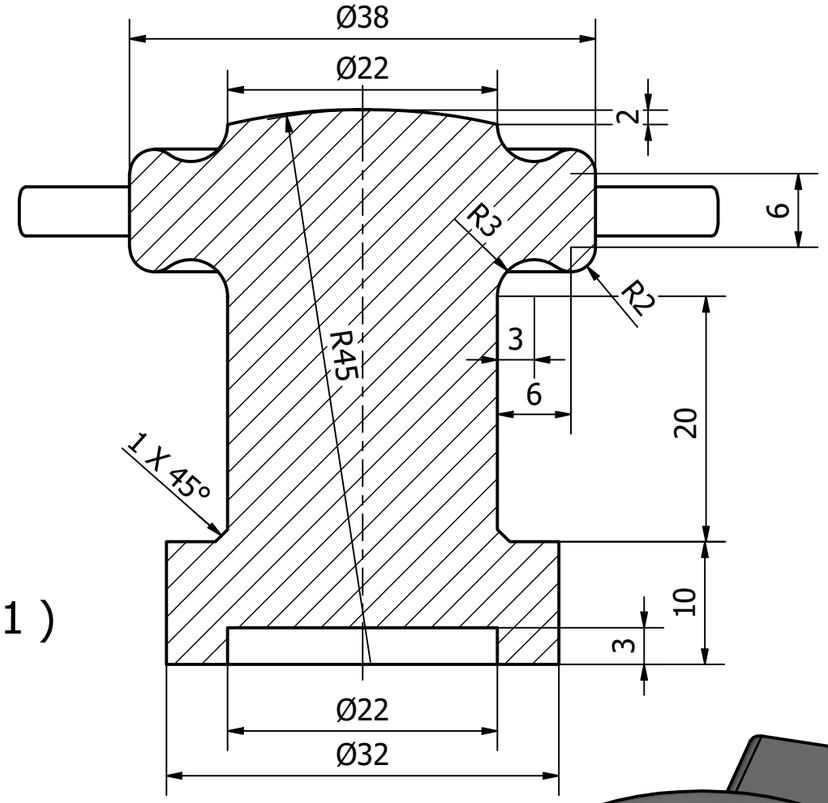

A-A (2 : 1)

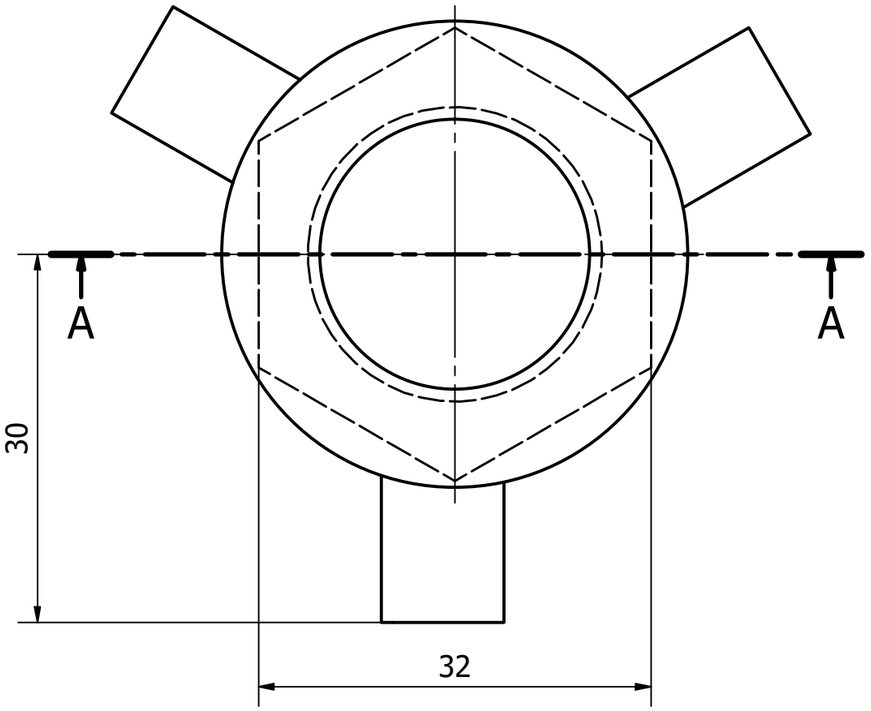

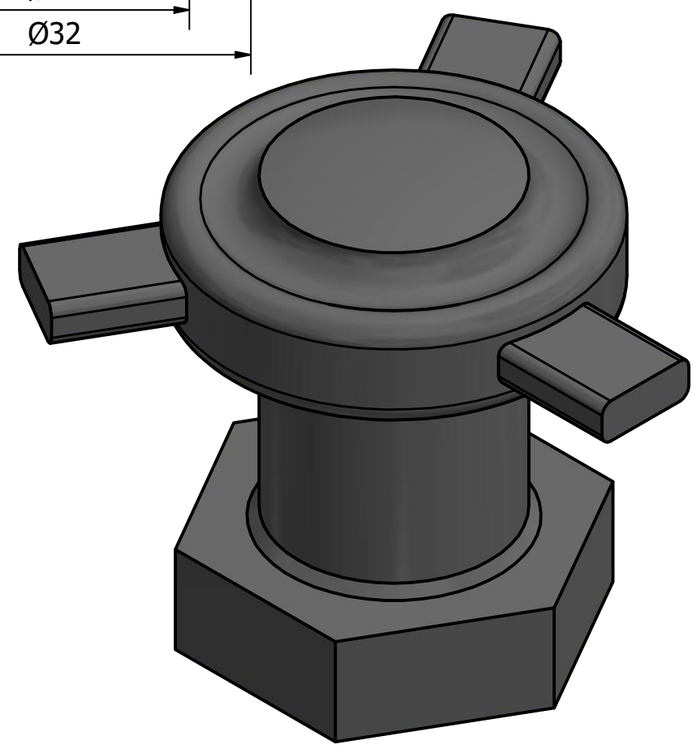

Designed by	Checked by	Approved by	Date	Date	
Vlado				6/3/2022	

M32	Edition	Sheet 1 / 1