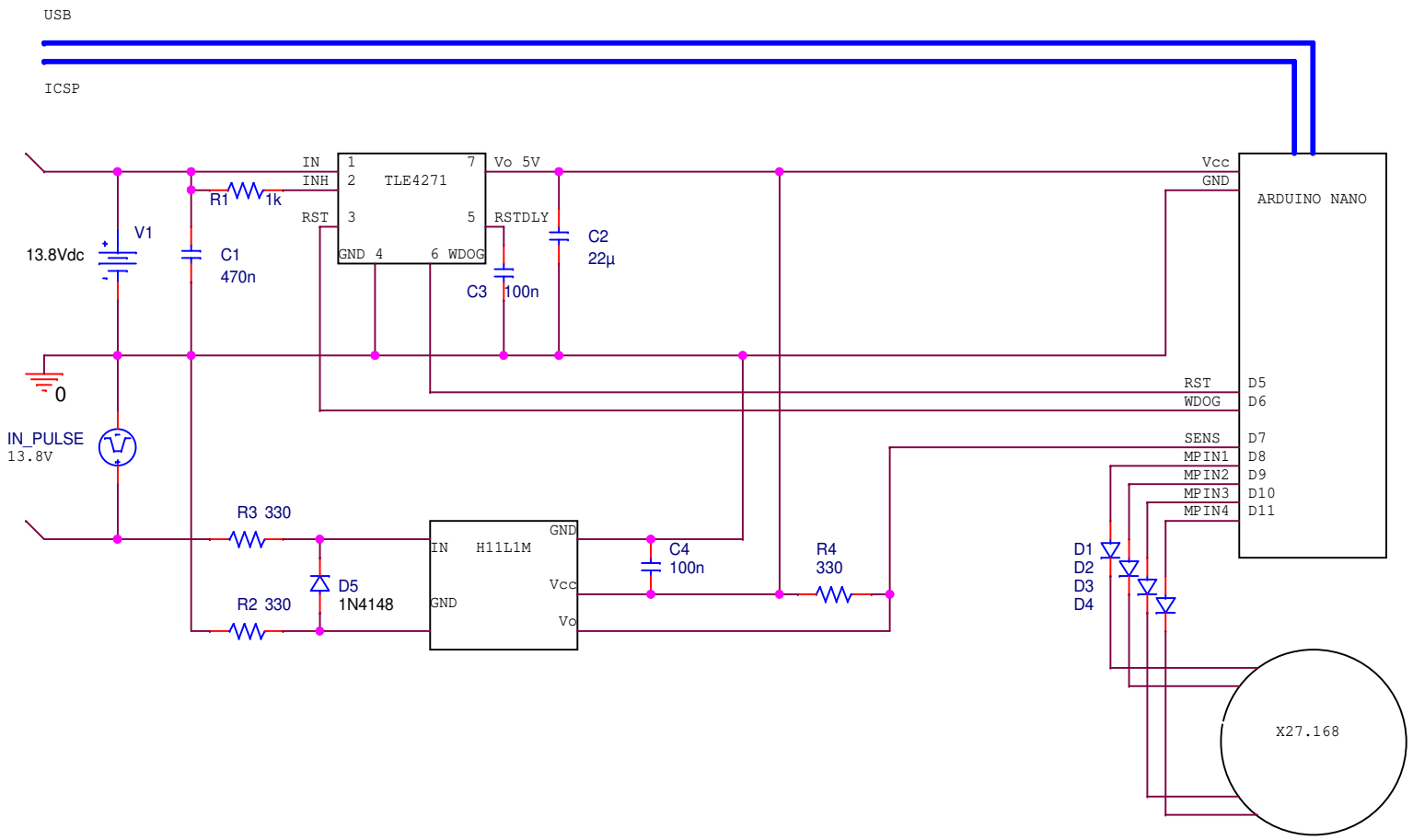

Title	DZM	
Size A	Document Number 1	Rev 0.1
Date: Sunday, March 04, 2018	Sheet 1 of 1	