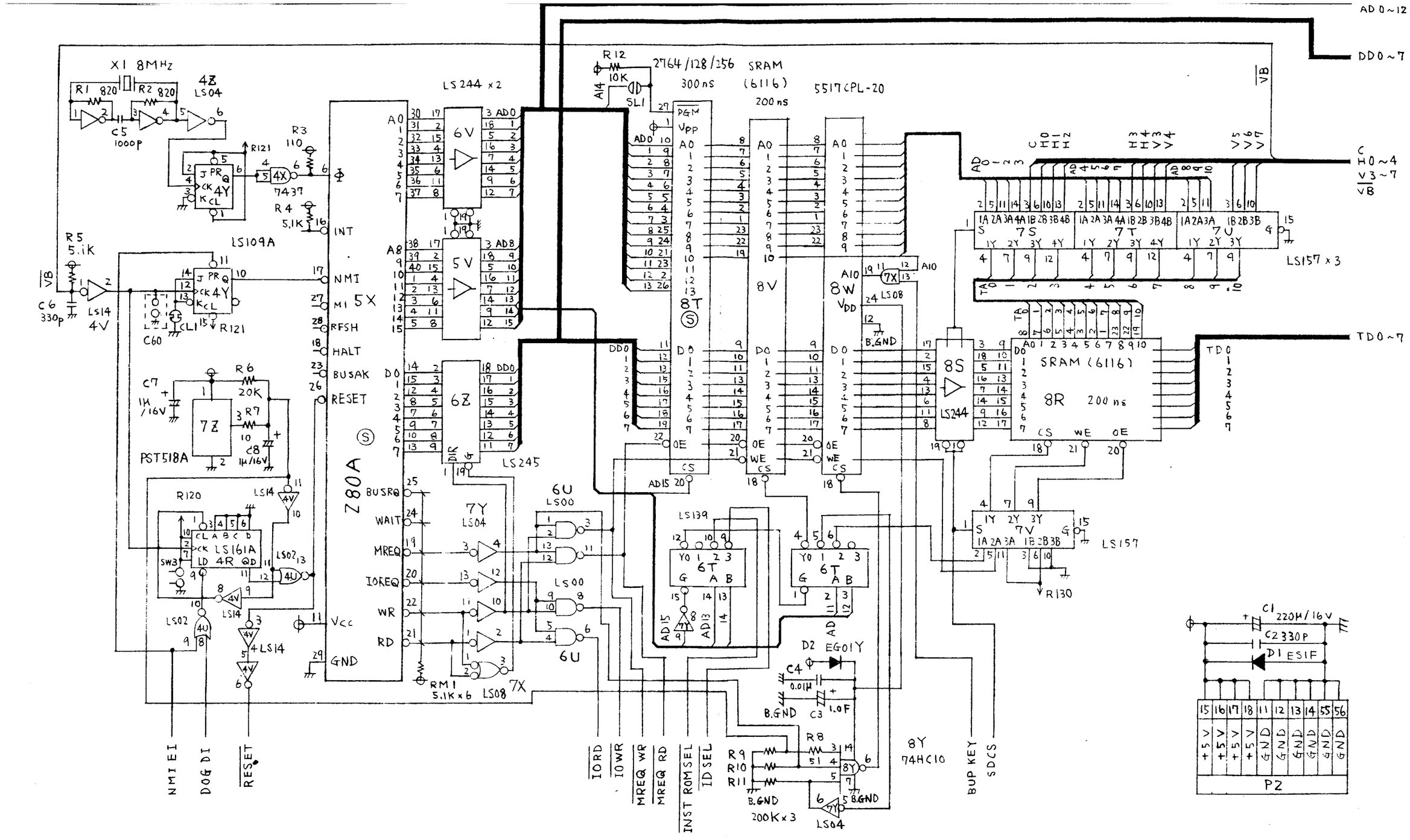


**A** PCH1—CPU SCHEMATIC
Sheet 1

©1986 Nintendo of America Inc.

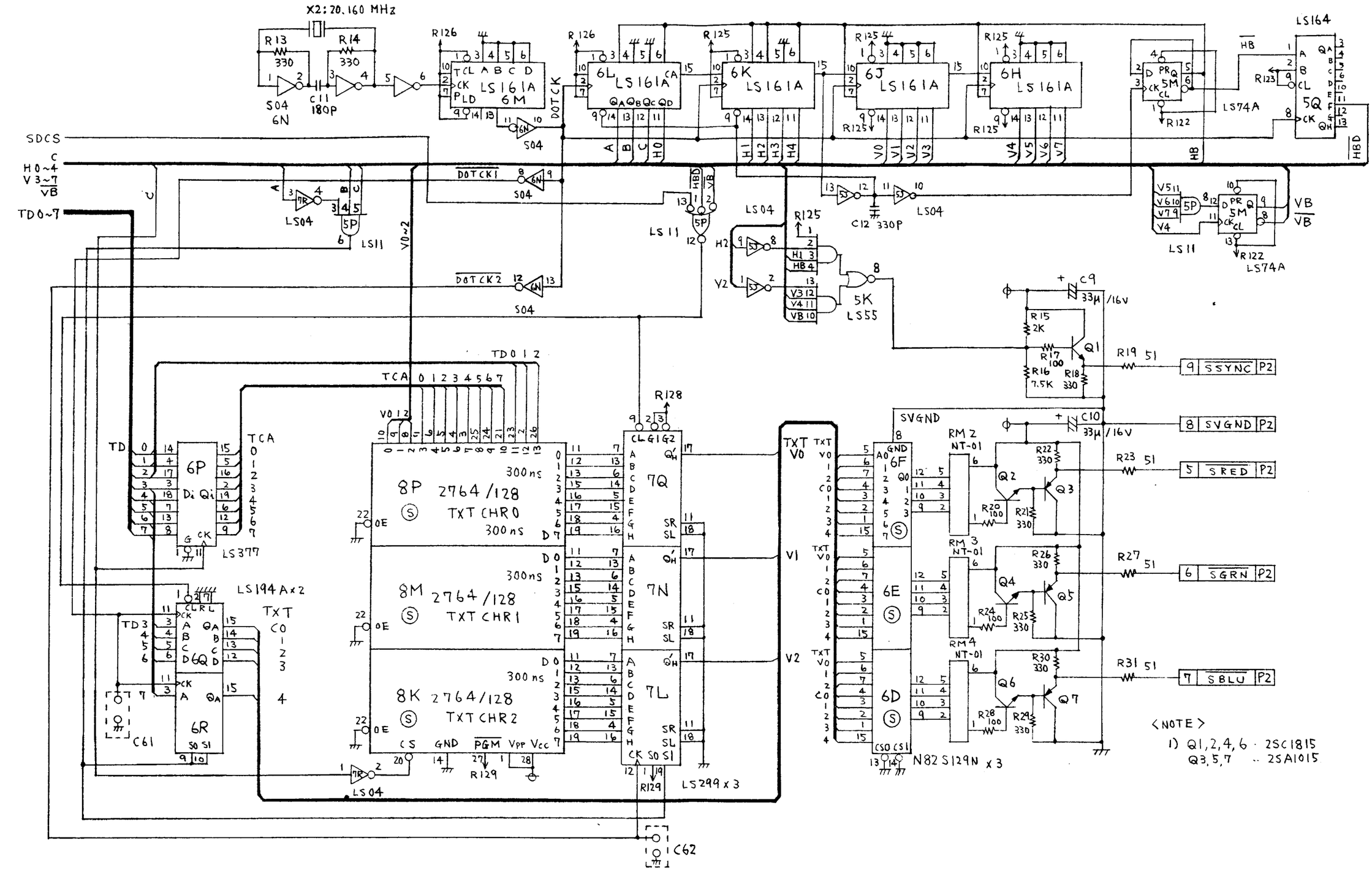


**B** PCH1—CPU SCHEMATIC
Sheet 2

©1986 Nintendo of America Inc.

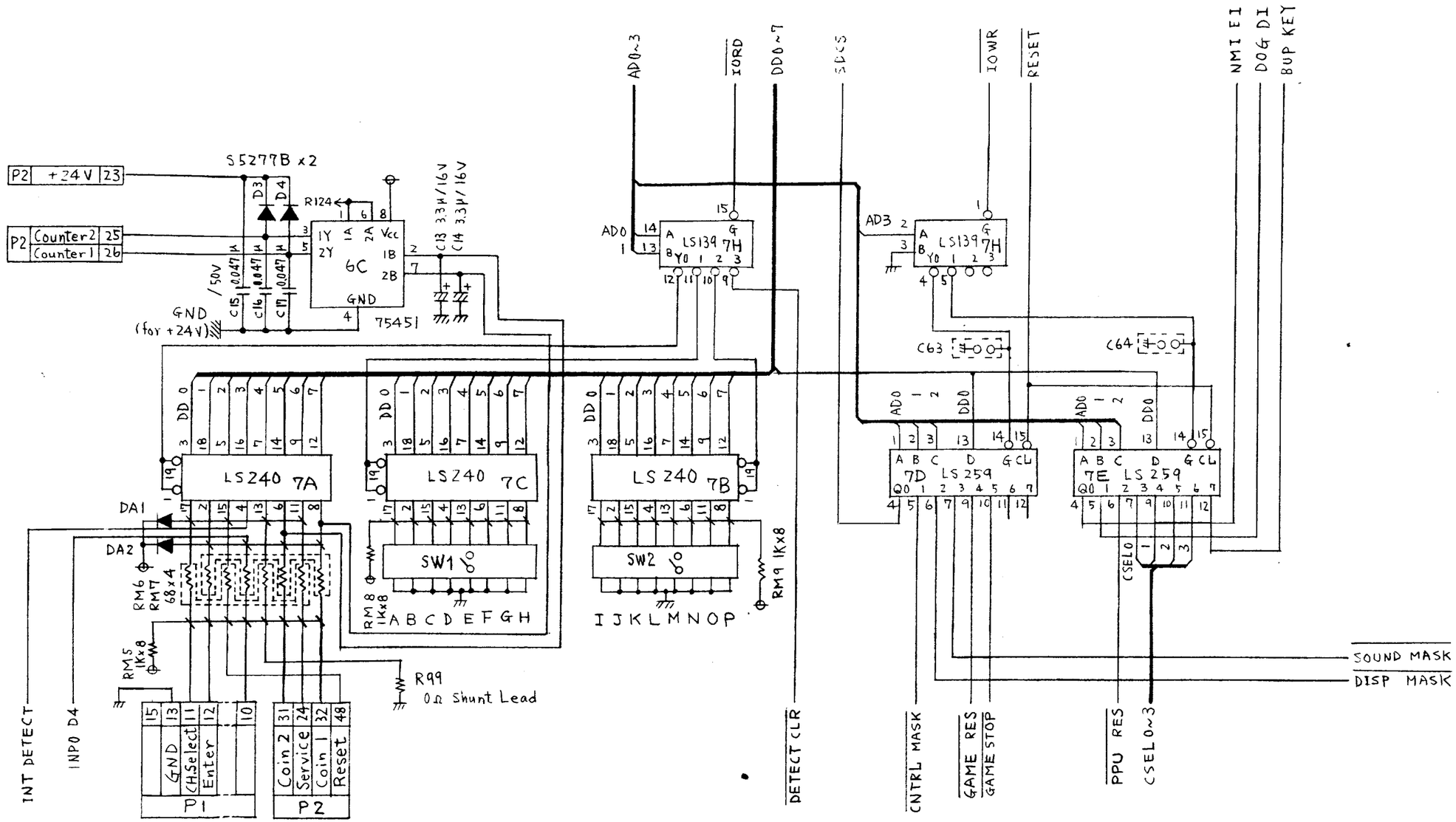


C PCH1—CPU SCHEMATIC
Sheet 3

©1986 Nintendo of America Inc.

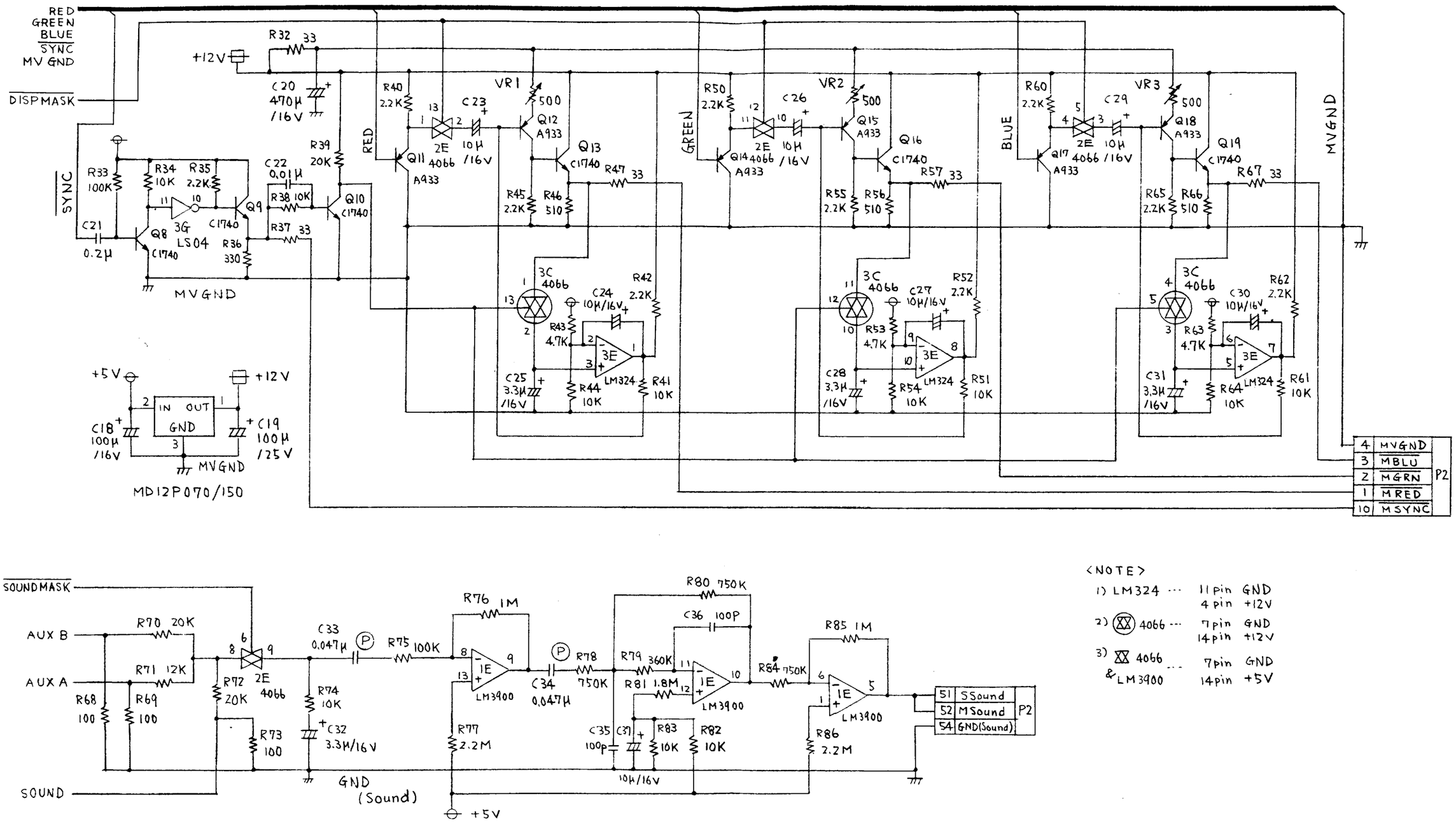


<NOTE>

1) LM324 ··· 11pin GND
4 pin +12V

2) 4066 ··· 7pin GND
14pin +12V

3) 4066 & LM3900 ··· 7pin GND
14pin +5V

**D** PCH1—CPU SCHEMATIC
Sheet 4

©1986 Nintendo of America Inc.

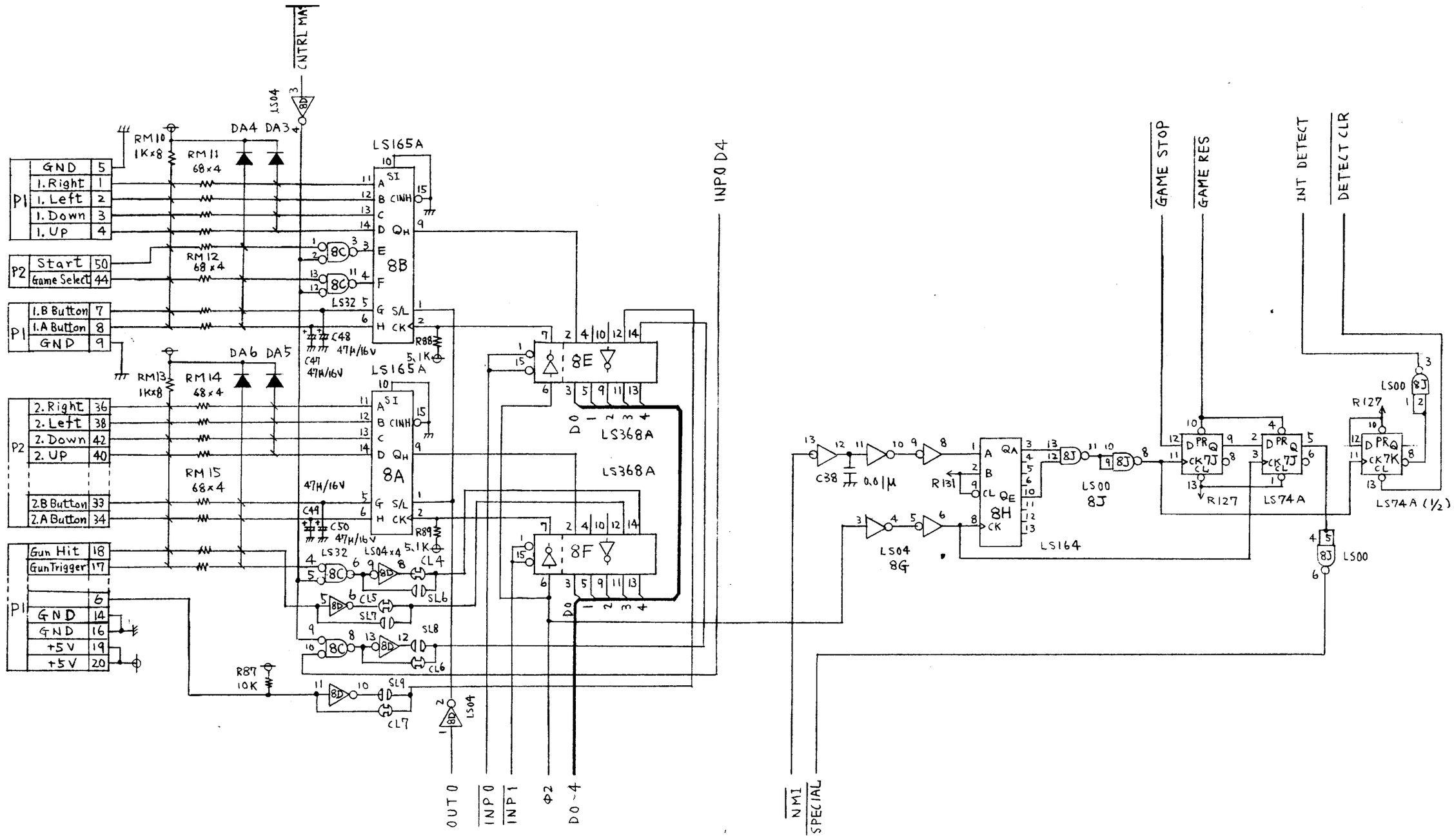


**E** PCH1—CPU SCHEMATIC
Sheet 5

©1986 Nintendo of America Inc.

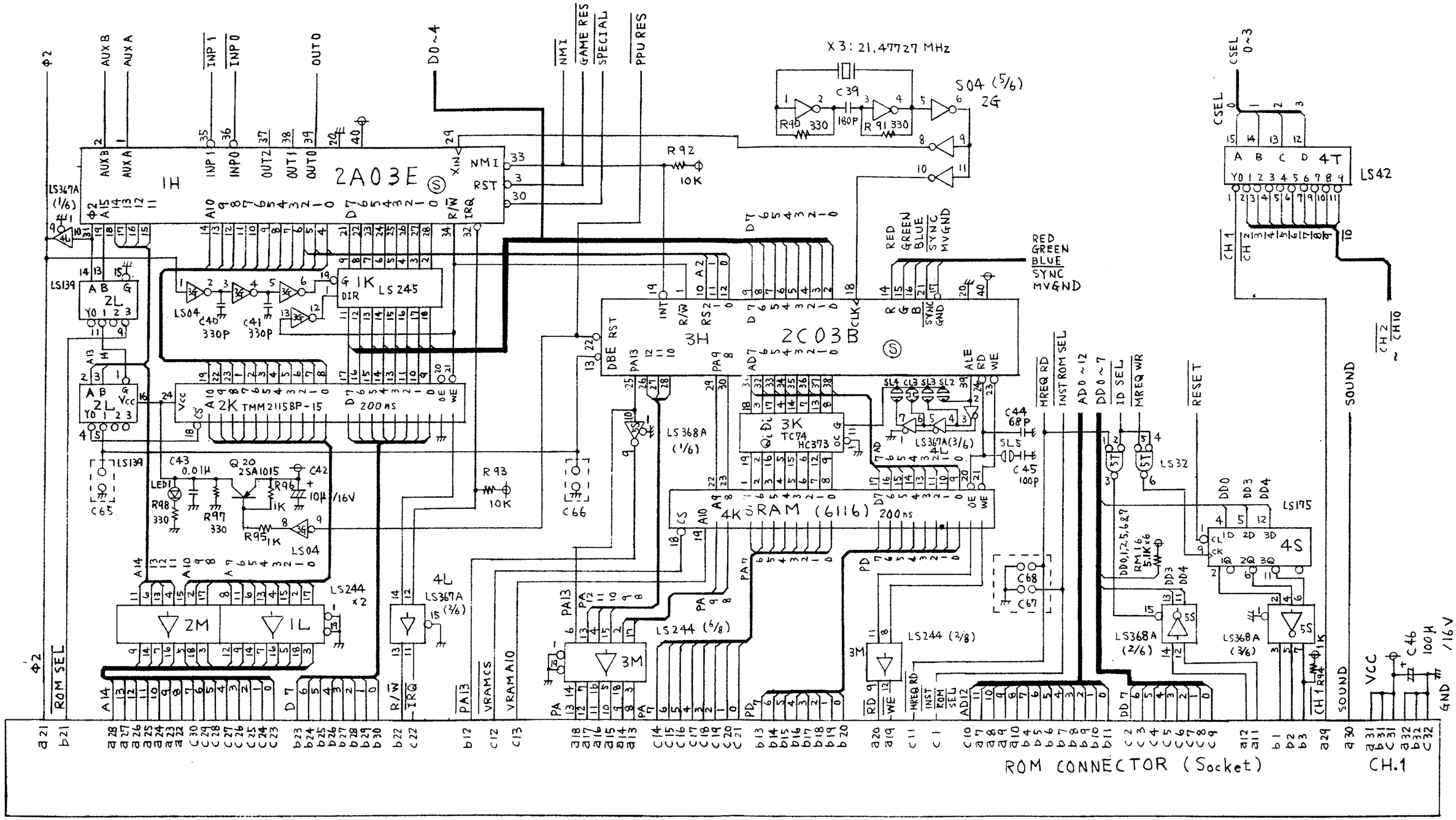


F PCH1—CPU SCHEMATIC
Sheet 6

©1986 Nintendo of America Inc.

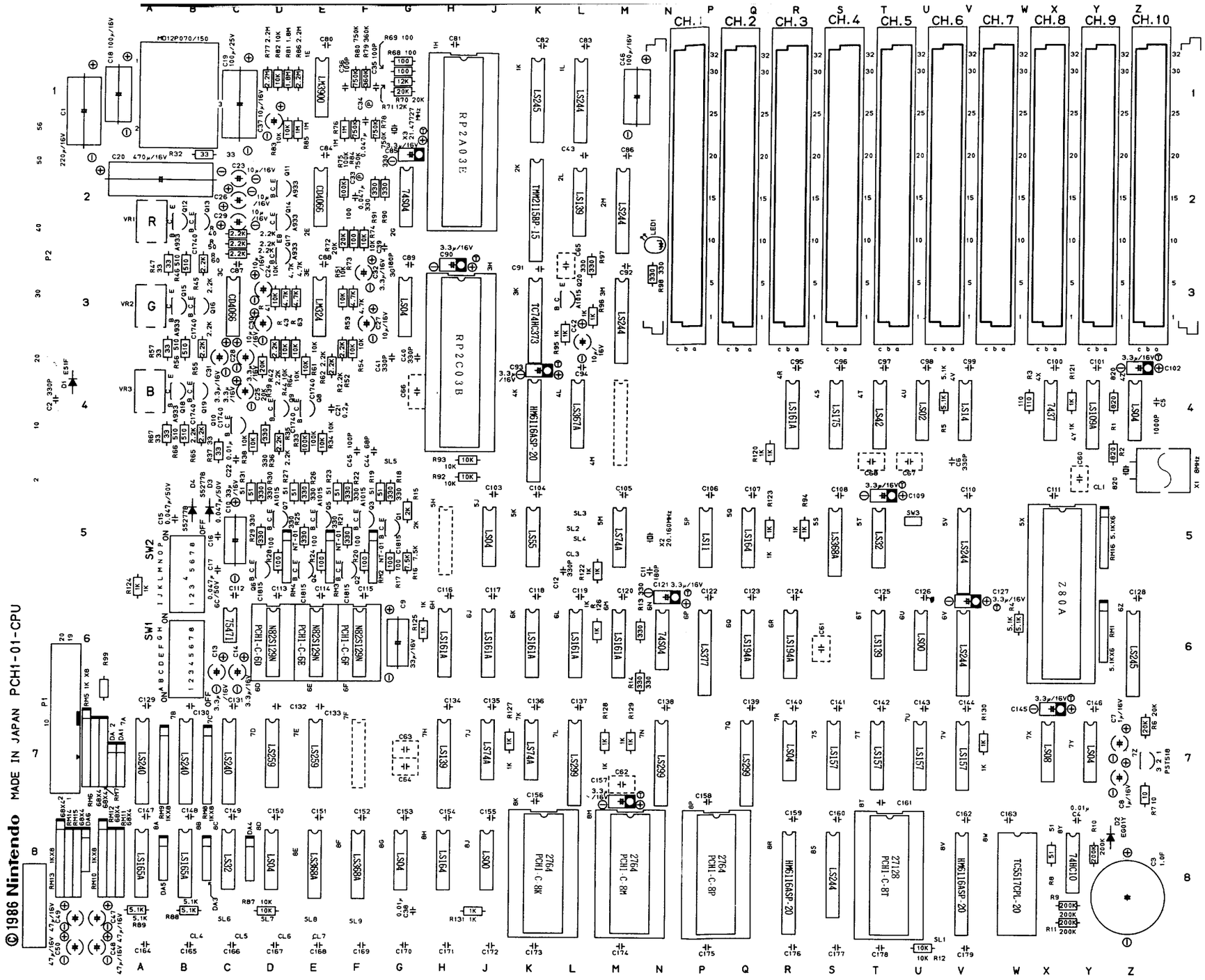


G PCH1—CPU ASSEMBLY

©1986 Nintendo of America Inc.

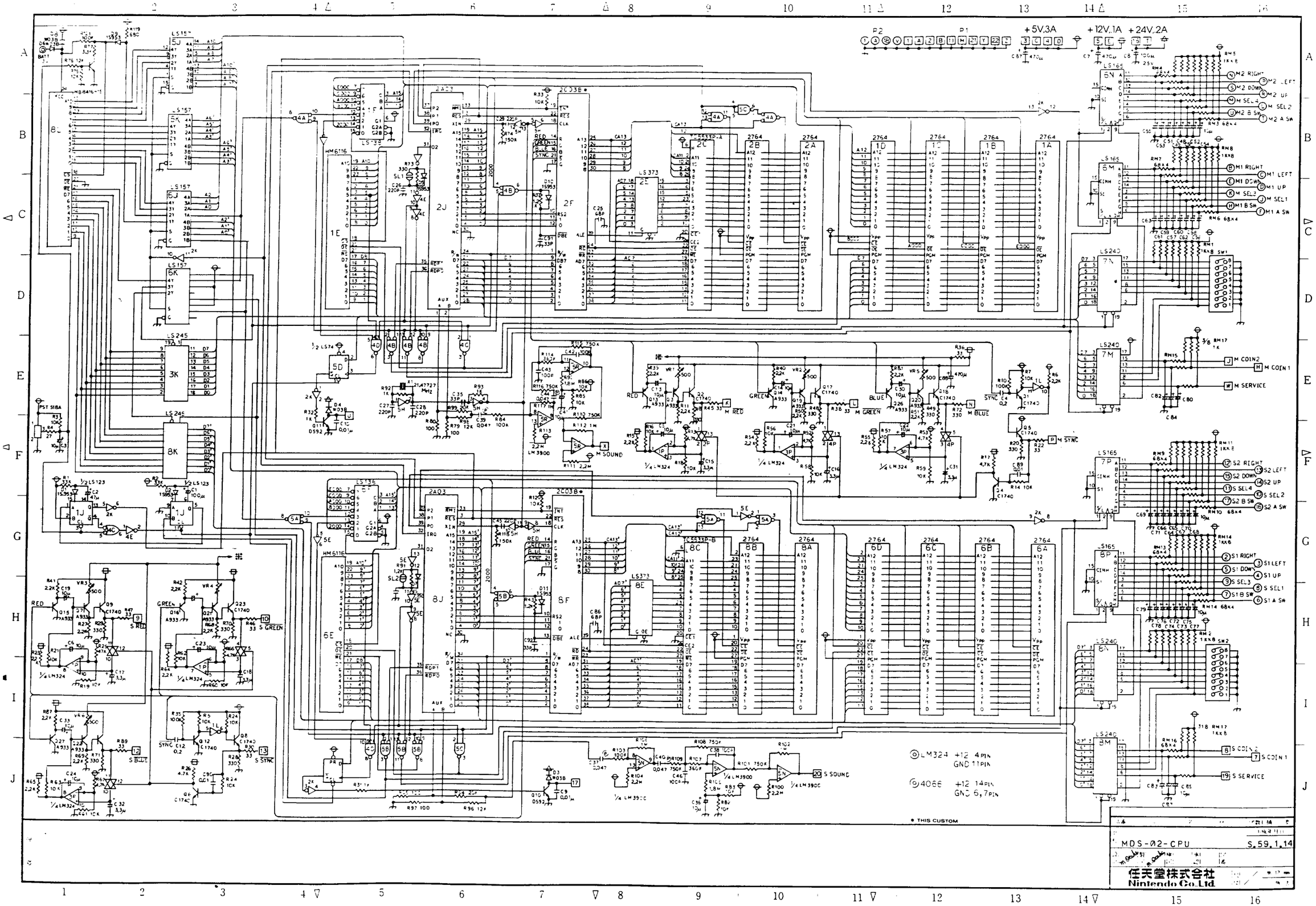
P2
P1
+5V,3A
+12V,1A
+24V,2A
M2 RIGHT
M2 LEFT
M2 DOWN
M2 UP
M SEL4
M SEL2
M2 B SW
M2 A SW
M1 RIGHT
M1 LEFT
M1 DOWN
M1 UP
M SEL2
M SEL1
M1 B SW
M1 A SW
M COIN2
M COIN1
M SERVICE
M SYNC
M RED
M GREEN
M BLUE
M SOUND
S2 RIGHT
S2 LEFT
S2 DOWN
S2 UP
S SEL4
S SEL2
S2 B SW
S2 A SW
S1 RIGHT
S1 LEFT
S1 DOWN
S1 UP
S SEL3
S SEL1
S1 B SW
S1 A SW
S RED
S GREEN
S BLUE
S SYNC
S SOUND
S COIN2
S COIN1
S SERVICE
LM324 +12 4PIN
GND 11PIN
4066 +12 14PIN
GND 6,7PIN
* THIS CUSTOM
MDS-02-CPU
S.59.1.14
任天堂株式会社
Nintendo Co.,Ltd.

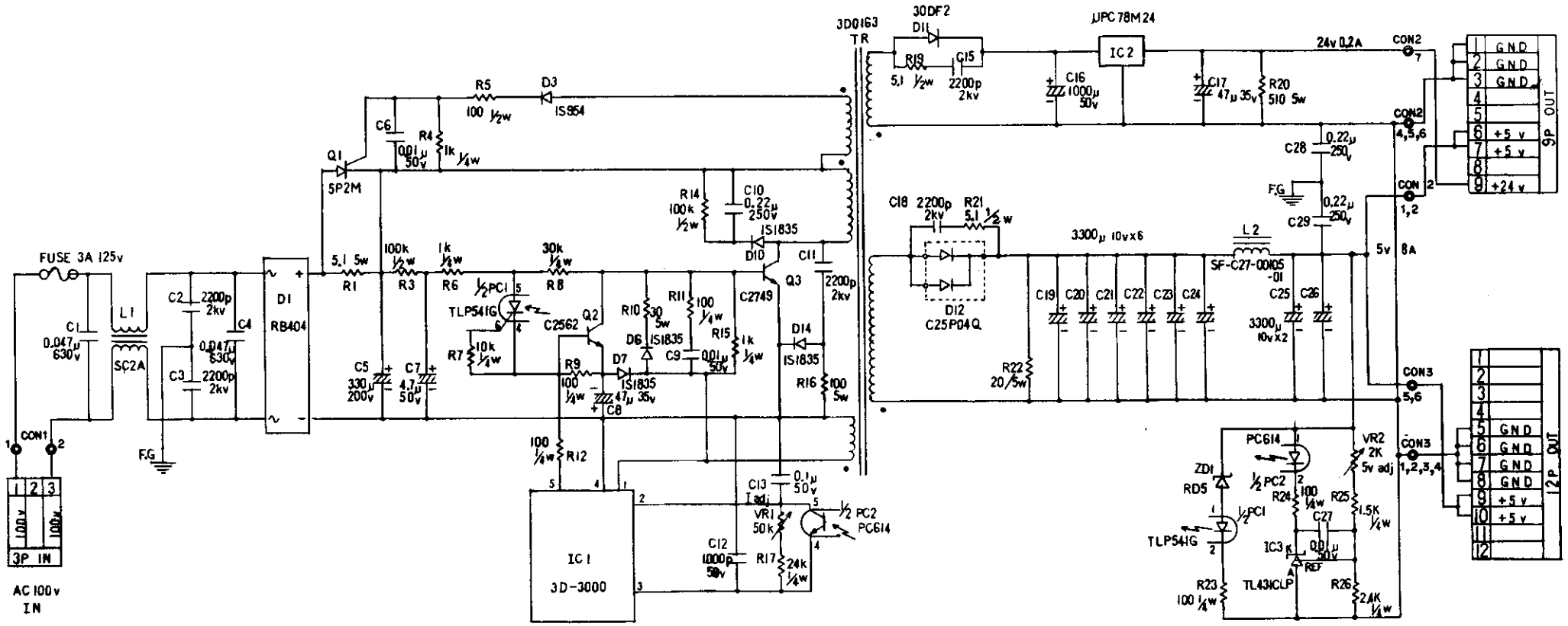


# H PP-1000A POWER SUPPLY SCHEMATIC

© 1983 Nintendo of America Inc.

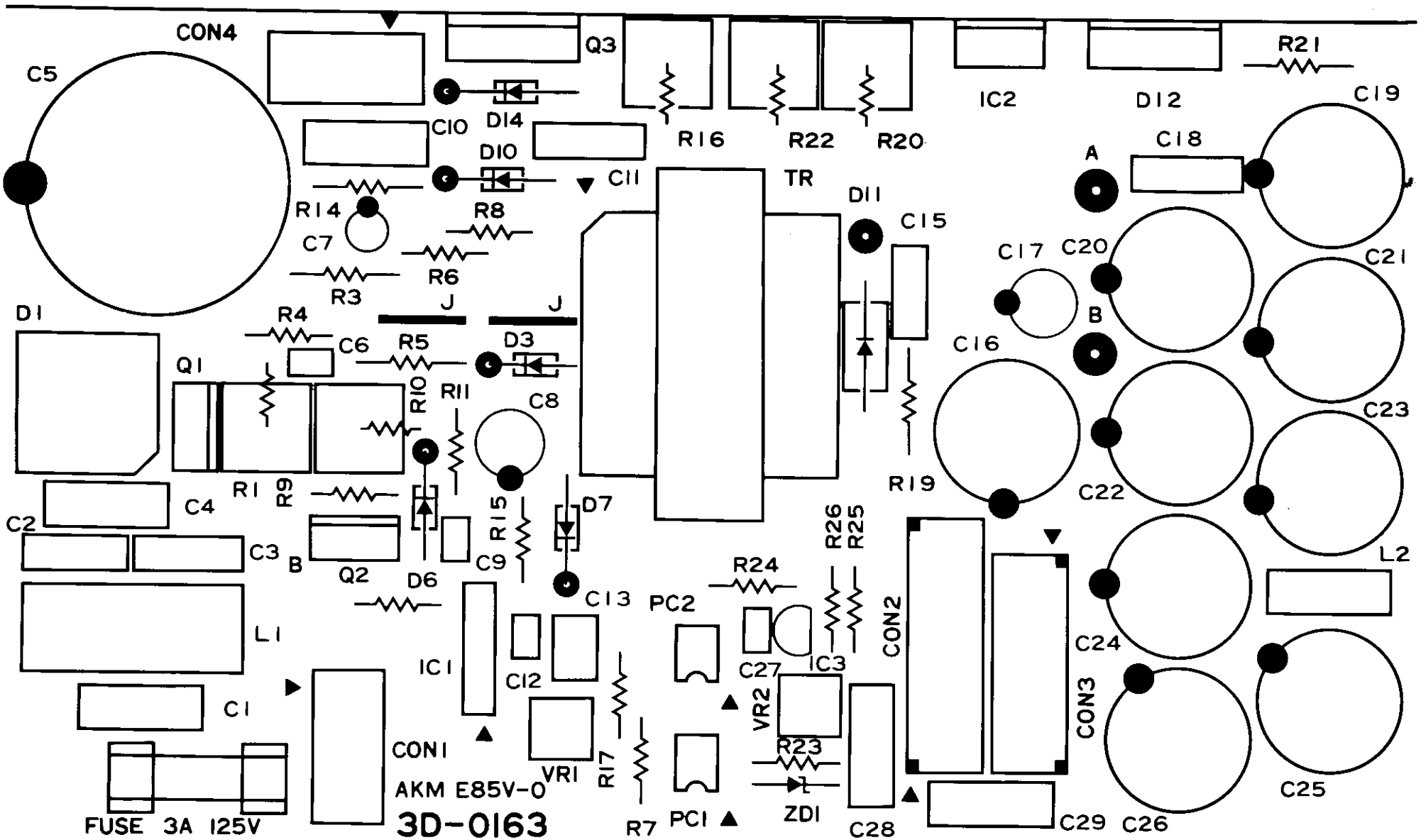


PP-1000A POWER SUPPLY ASSEMBLY

© 1983 Nintendo of America Inc.

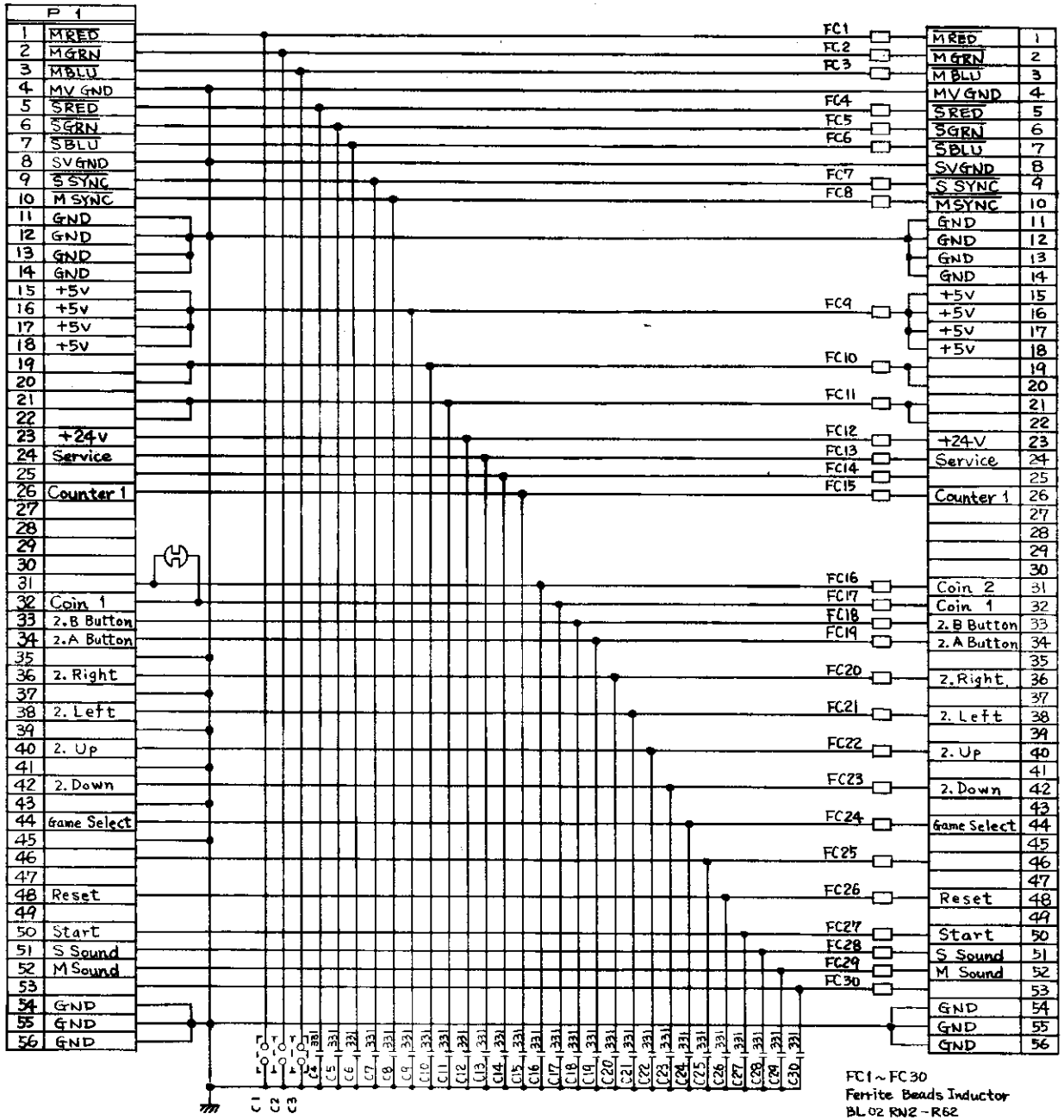


**J** 054-FCC SCHEMATIC

© 1983 Nintendo of America Inc.

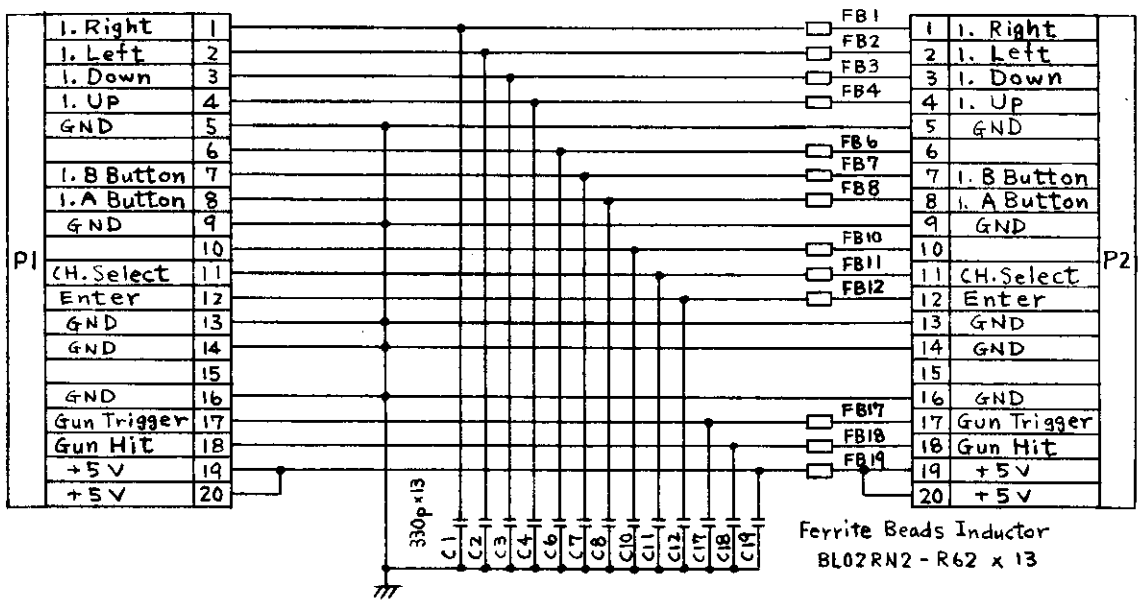


**K** 079-FCC SCHEMATIC

©1986 Nintendo of America Inc.

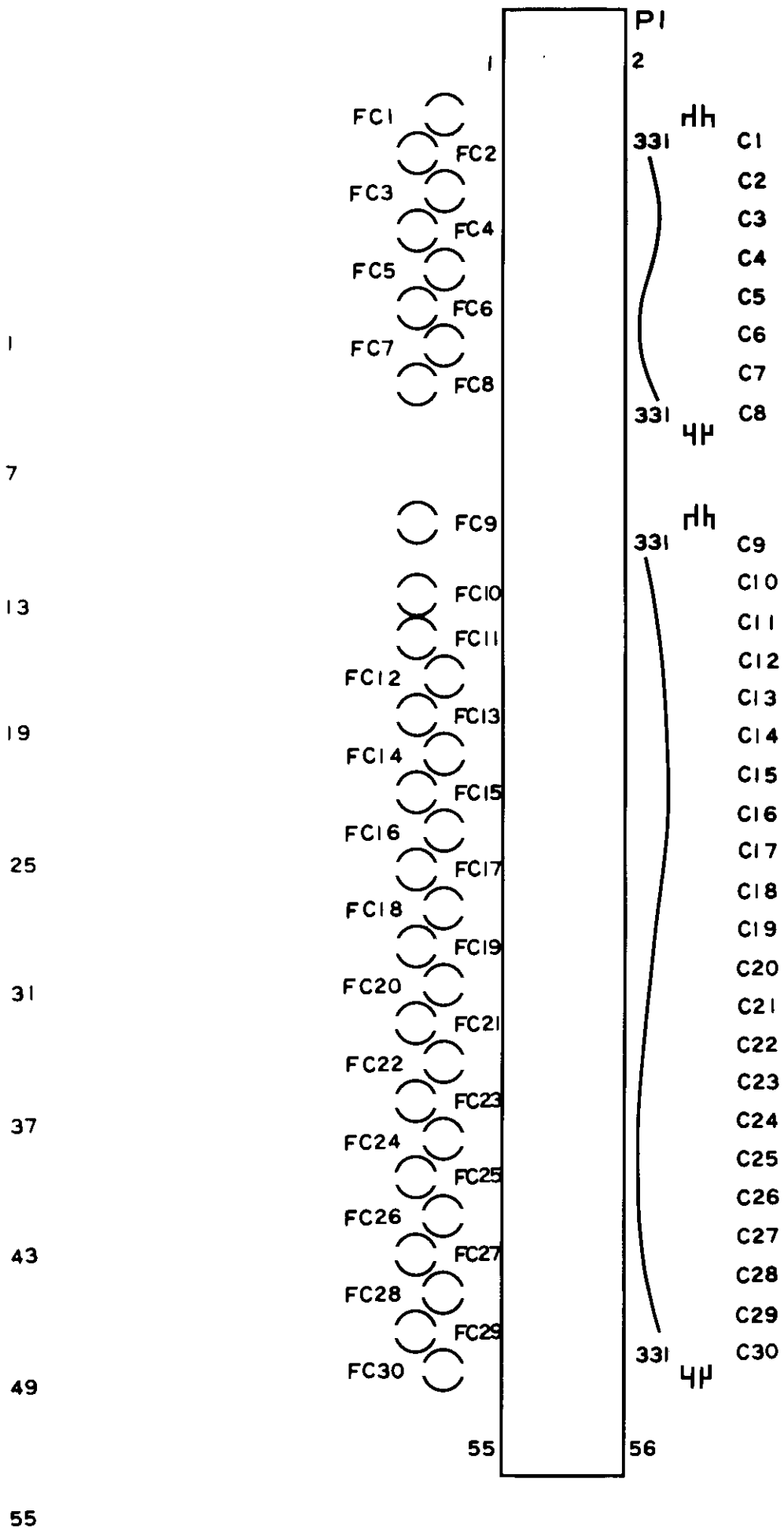


L 054-FCC ASSEMBLY

© 1983 Nintendo of America Inc.

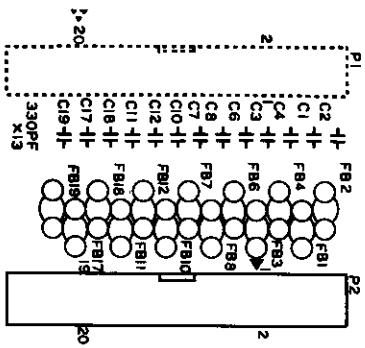


©1986 Nintendo

MADE IN JAPAN

079-01-FCC

**M** 079-FCC ASSEMBLY

©1986 Nintendo of America Inc.

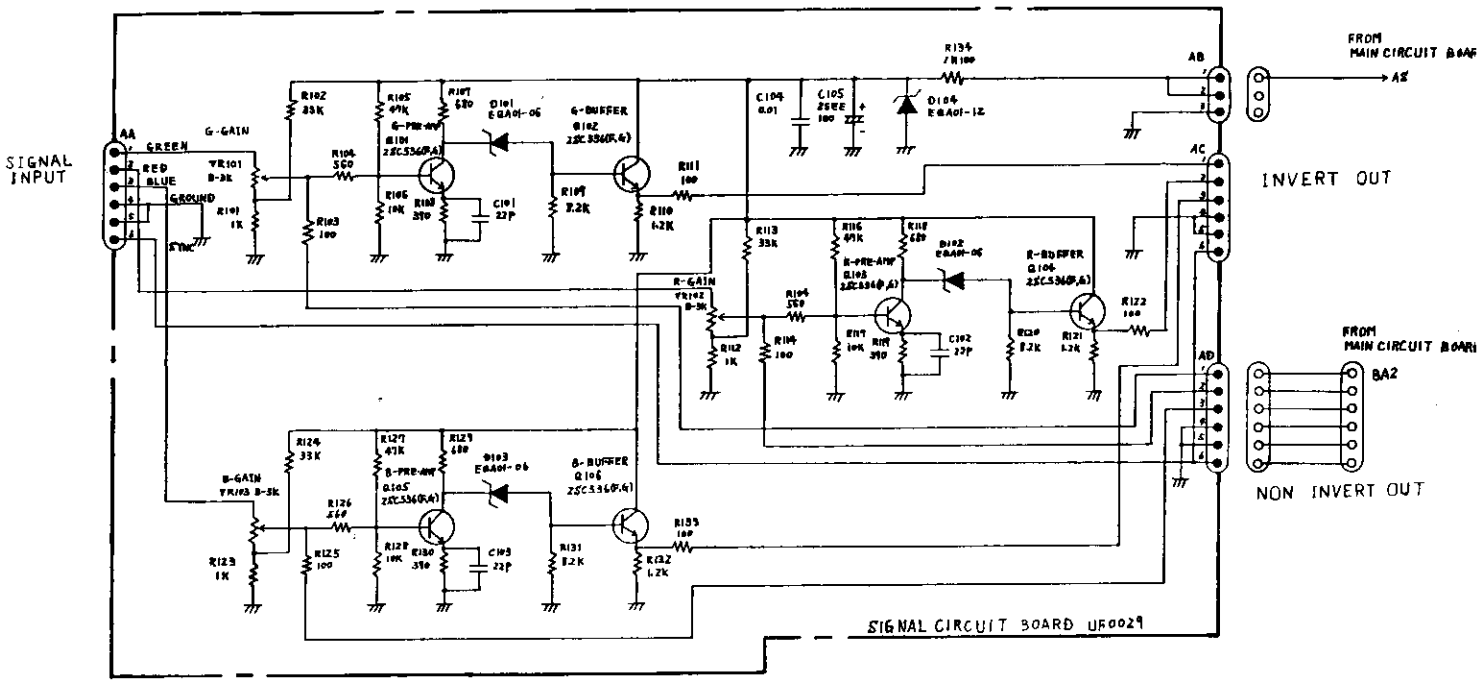


---------- WARNINGS ----------

1. Service work should only be performed by a qualified service technician.
2. An isolation transformer must be used between the AC supply and the AC plug of the monitor before servicing or testing is performed since the chassis and the heat-sink are directly connected to one side of the AC line which could present a shock hazard.
   Supply voltage of the video monitor : AC 90V - 110V 50/60 Hz
3. X-RAY RADIATION WARNING AND PRODUCT SAFETY NOTICE !
   This video monitor contains circuits and components included specifically for safety purpose.
   For continued protection, no changes should be made to original design, and components identified by shading and by ( ⚠ ) on schematic diagram should be replaced with exact factory replacement parts.
   DO NOT degrade the safty of the set through improper servicing.

## Adjustment of Video Monitor

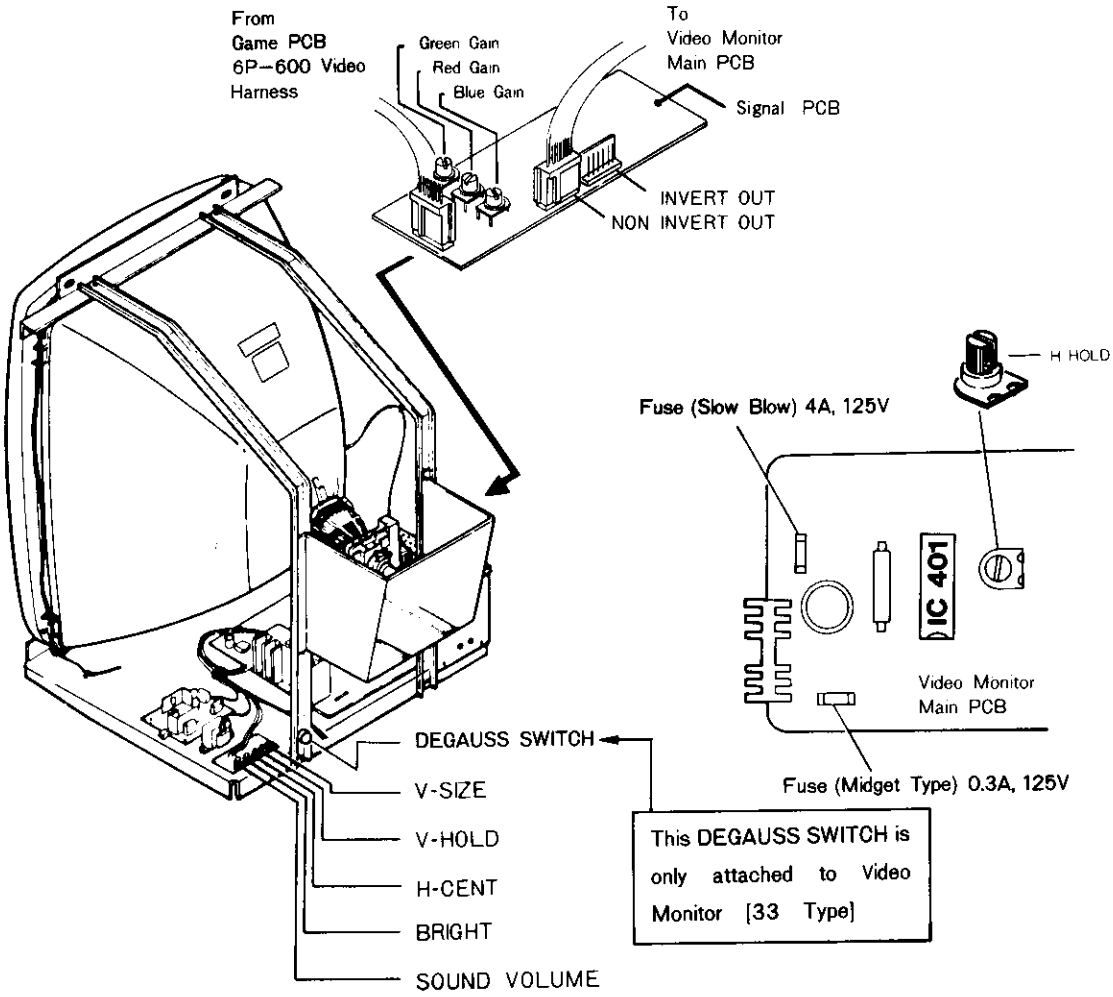


**WARNING**

The Video Monitor contains HIGH VOLTAGE capable of delivering LETHAL quantities of energy. TO AVOID DANGER TO LIFE, don't attempt to service the chassis until all precautions necessary for working on HIGH VOLTAGE equipment have been observed.

**[32 Type] 20–EZV(R–C) SCHEMATIC**
**[33 Type] 20–EZV(R–C) SCHEMATIC**
**Sheet 2 of 2**

©1982 **Nintendo of America Inc.**
**Revision 2**

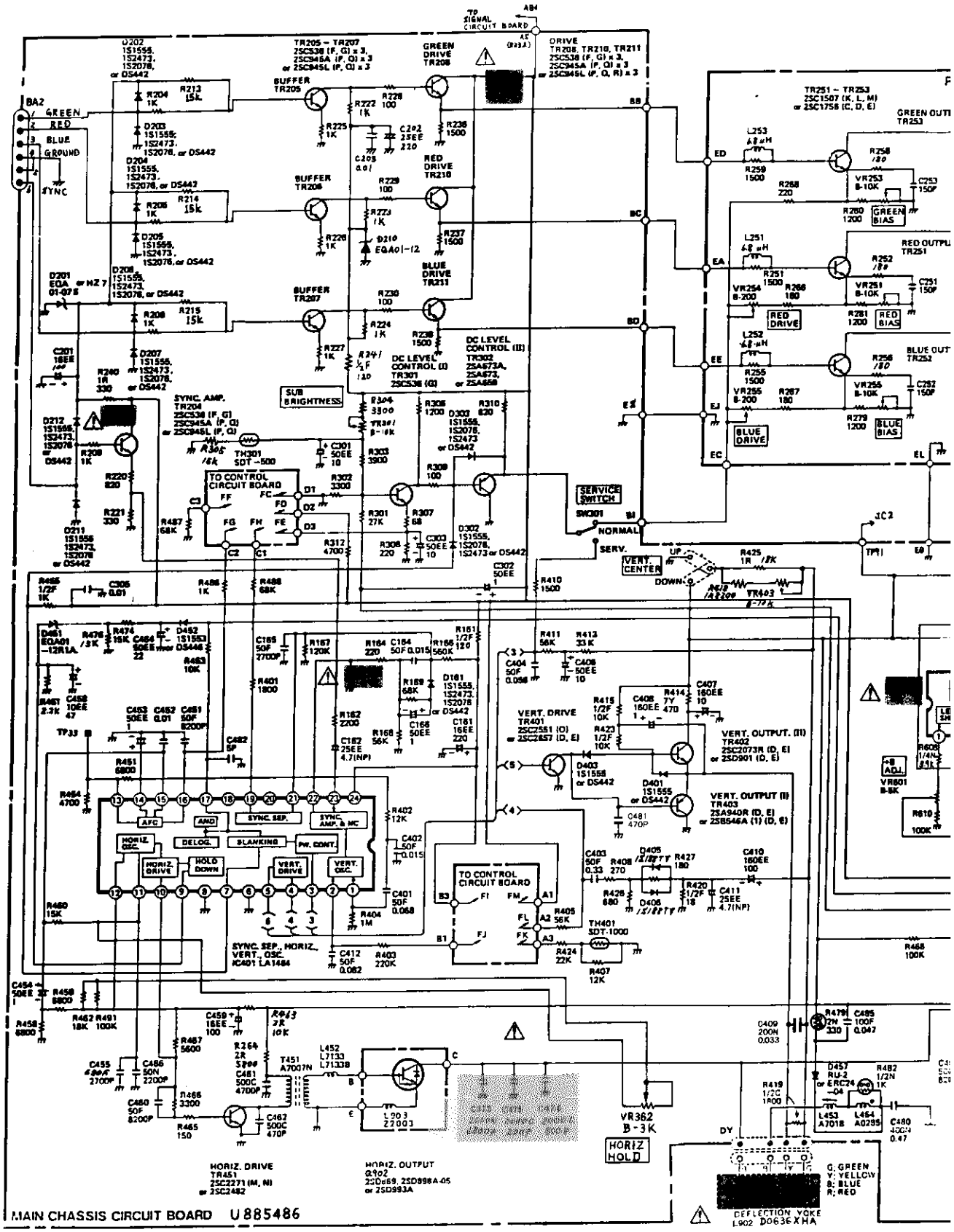
TO SIGNAL CIRCUIT BOARD
GREEN
RED
BLUE
GROUND
SYNC
BUFFER TR205
BUFFER TR206
BUFFER TR207
GREEN DRIVE TR208
RED DRIVE TR210
BLUE DRIVE TR211
DC LEVEL CONTROL (II) TR302 2SA673A, 2SA673, or 2SA658
DC LEVEL CONTROL (I) TR301 2SC536 (G)
SUB BRIGHTNESS
SYNC. AMP. TR204 2SC536 (F, G) 2SC945A (P, Q) or 2SC945L (P, Q)
TO CONTROL CIRCUIT BOARD
SERVICE SWITCH
NORMAL
SERV.
VERT. CENTER
VERT. DRIVE TR401 2SC2551 (O) or 2SC2857 (D, E)
VERT. OUTPUT (II) TR402 2SC2073R (D, E) or 2SD901 (D, E)
VERT. OUTPUT (I) TR403 2SA940R (D, E) or 2SB546A (I) (D, E)
SYNC. SEP., HORIZ., VERT., OSC. IC401 LA1484
HORIZ. DRIVE TR451 2SC2271 (M, N) or 2SC2482
HORIZ. OUTPUT Q902 2SD869, 2SD998A-05 or 2SD993A
HORIZ HOLD
DEFLECTION YOKE L902 D0636XHA
G: GREEN
Y: YELLOW
B: BLUE
R: RED
MAIN CHASSIS CIRCUIT BOARD U885486

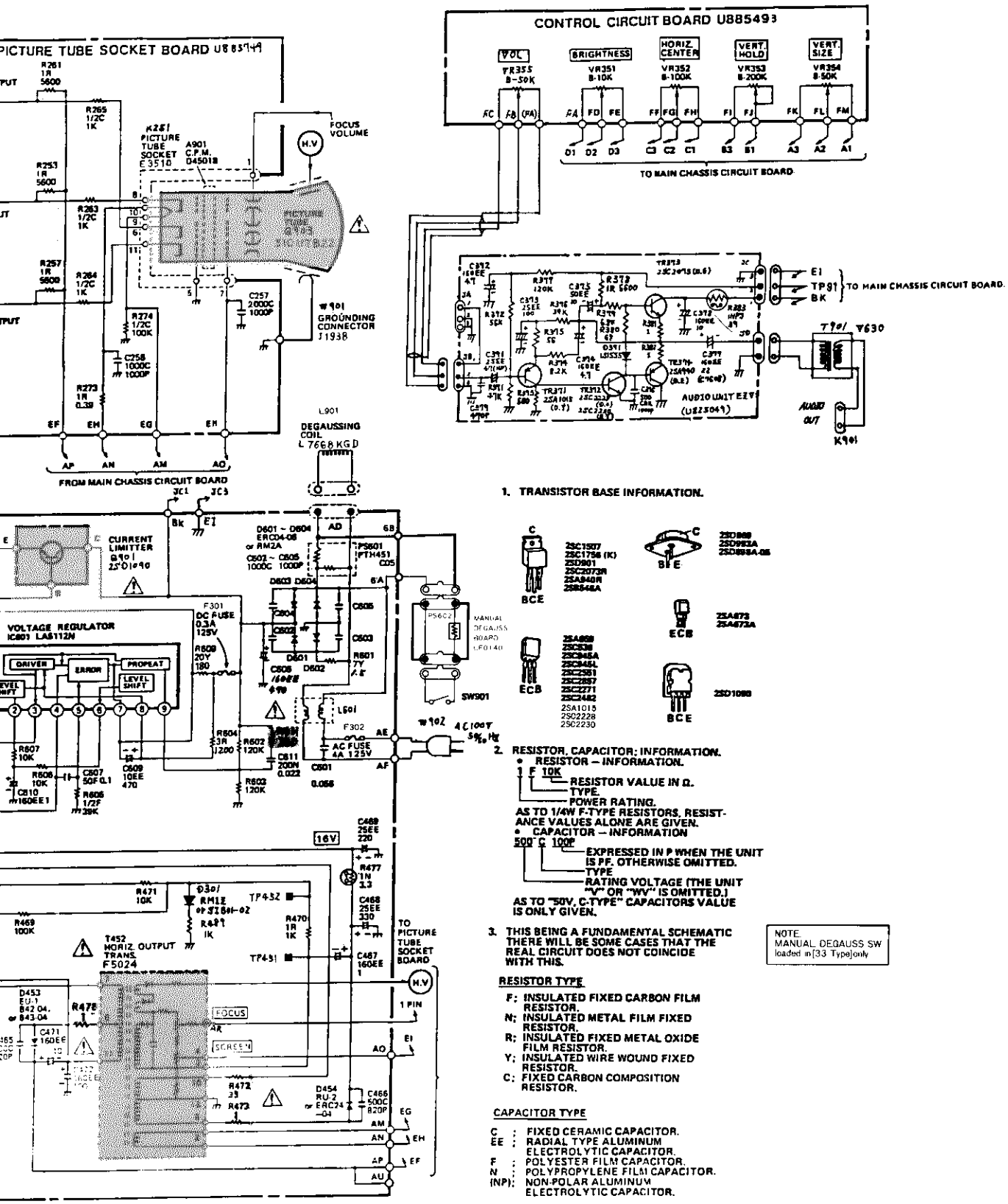


1. TRANSISTOR BASE INFORMATION.

2. RESISTOR, CAPACITOR; INFORMATION.
   - RESISTOR – INFORMATION.
     1 F 10K
     - RESISTOR VALUE IN Ω.
     - TYPE.
     - POWER RATING.

   AS TO 1/4W F-TYPE RESISTORS, RESISTANCE VALUES ALONE ARE GIVEN.
   - CAPACITOR – INFORMATION
     500 C 100P
     - EXPRESSED IN P WHEN THE UNIT IS PF. OTHERWISE OMITTED.
     - TYPE
     - RATING VOLTAGE (THE UNIT "V" OR "WV" IS OMITTED.)

   AS TO "50V, C-TYPE" CAPACITORS VALUE IS ONLY GIVEN.

3. THIS BEING A FUNDAMENTAL SCHEMATIC THERE WILL BE SOME CASES THAT THE REAL CIRCUIT DOES NOT COINCIDE WITH THIS.

NOTE.
MANUAL DEGAUSS SW loaded in [33 Type] only

**RESISTOR TYPE**

- F: INSULATED FIXED CARBON FILM RESISTOR.
- N; INSULATED METAL FILM FIXED RESISTOR.
- R; INSULATED FIXED METAL OXIDE FILM RESISTOR.
- Y; INSULATED WIRE WOUND FIXED RESISTOR.
- C: FIXED CARBON COMPOSITION RESISTOR.

**CAPACITOR TYPE**

- C ; FIXED CERAMIC CAPACITOR.
- EE ; RADIAL TYPE ALUMINUM ELECTROLYTIC CAPACITOR.
- F ; POLYESTER FILM CAPACITOR.
- N ; POLYPROPYLENE FILM CAPACITOR.
- (NP); NON-POLAR ALUMINUM ELECTROLYTIC CAPACITOR.

[32 Type] 20–EZV(R–C) SCHEMATIC
[33 Type] 20–EZV(R–C) SCHEMATIC
Sheet 1 of 2

©1982 Nintendo of America Inc.

Revision 2

## WIRING DIAGRAM NOTES

* Since the wiring diagram shows the basic circuit configuration, a difference may exist according to the models.
  Make "⚠" (▒) indicates a critical safety component.
  To avoid injury and to maintain the optimum performance, the specified components must be used when they are replaced.

Resistor/Capacitor Representation:

- Resistor

| | | |
|---|---|---|
| Unit: | No indication | Ω |
| | K | KΩ |
| | M | MΩ |
| Tolerance: | No indication | ±10% |
| | J | ±5% |
| Power rating: | No indication | 1/4W |

- Capacitor

| | | |
|---|---|---|
| Unit: | No indication or μ | μF |
| | P | pF |
| Rated voltage: | No indication | 50V |

Some test points are without pins and they are indicated by a bracket ( ).

| Resistor | | Capacitor | |
|---|---|---|---|
| No indication | Carbon film resistor | No indication | Ceramic capacitor |
| Ⓒ | Solid resistor | ML | Mylar capacitor |
| Ⓢ | Metal oxide film resistor | PF | Polypropylene film capacitor |
| Ⓝ | Metal film resistor | TA | Tantalum capacitor |
| Ⓦ | Cement resistor | ST | Styrol capacitor |
| Ⓣ | Special resistor | | |

WARNINGS

1. Service work should only be performed by a qualified service technician.
2. An isolation transformer must be used between the AC supply and the AC plug of the monitor before servicing or testing is performed since the chassis and the heat-sink are directly connected to one side of the AC line which could present a shock hazard.
   Supply voltage of the video monitor : AC 90V - 110V 50/60 Hz
3. X-RAY RADIATION WARNING AND PRODUCT SAFETY NOTICE !
   This video monitor contains circuits and components included specifically for safety purpose.
   For continued protection, no changes should be made to original design, and components identified by shading and by ( ⚠ ) on schematic diagram should be replaced with exact factory replacement parts.
   DO NOT degrade the safty of the set through improper servicing.

## Adjustment of Video Monitor

Video Monitor : Type **XM-2001N**

### CHASSIS LAYOUT

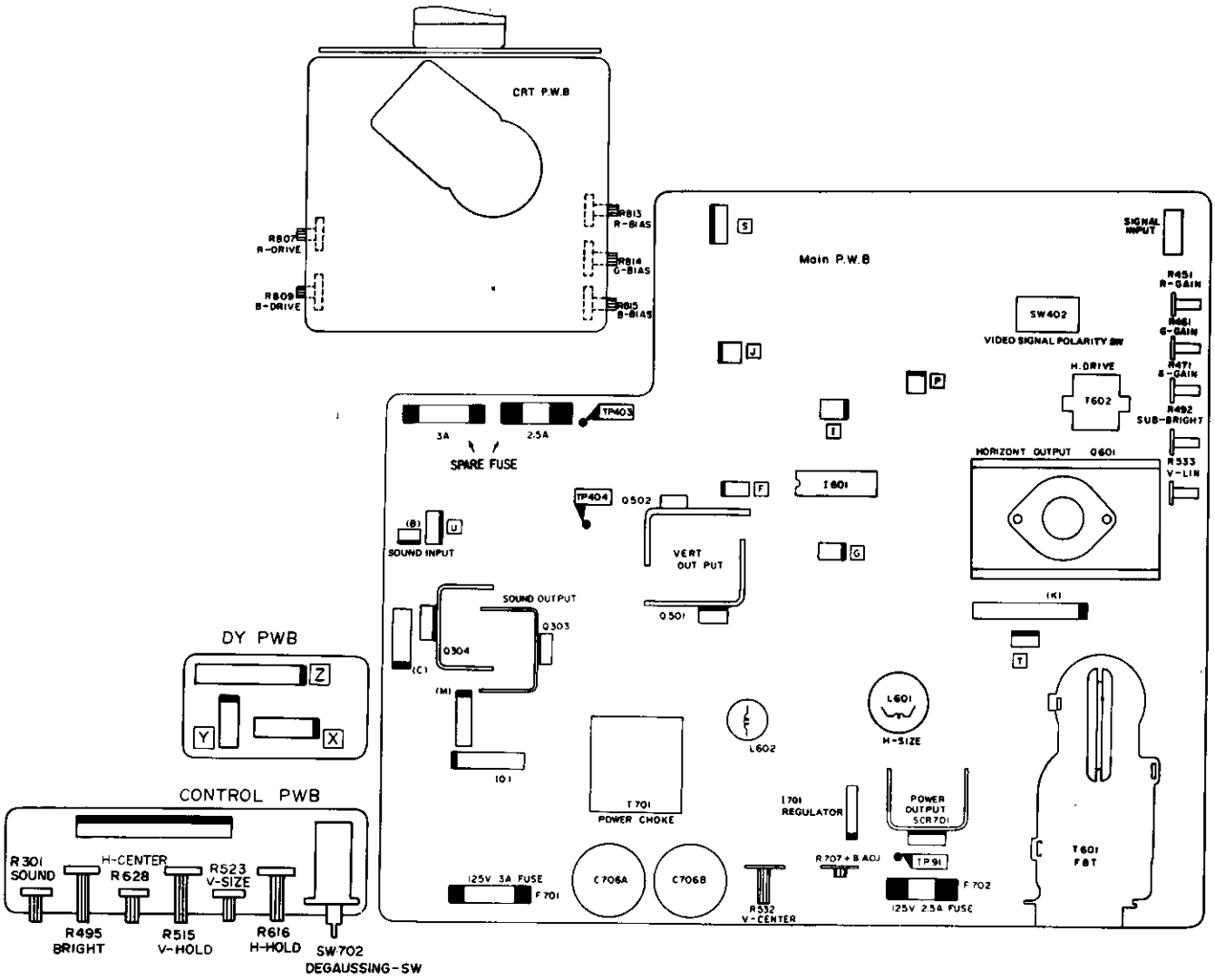


**WARNING**

The Video Monitor contains HIGH VOLTAGE capable of delivering LETHAL quantities of energy. TO AVOID DANGER TO LIFE, don't attempt to service the chassis until all precautions necessary for working on HIGH VOLTAGE equipment have been observed.

[Y51 Type] XM-2001N SCHEMATIC DIAGRAM

©1984 Nintendo of America Inc.

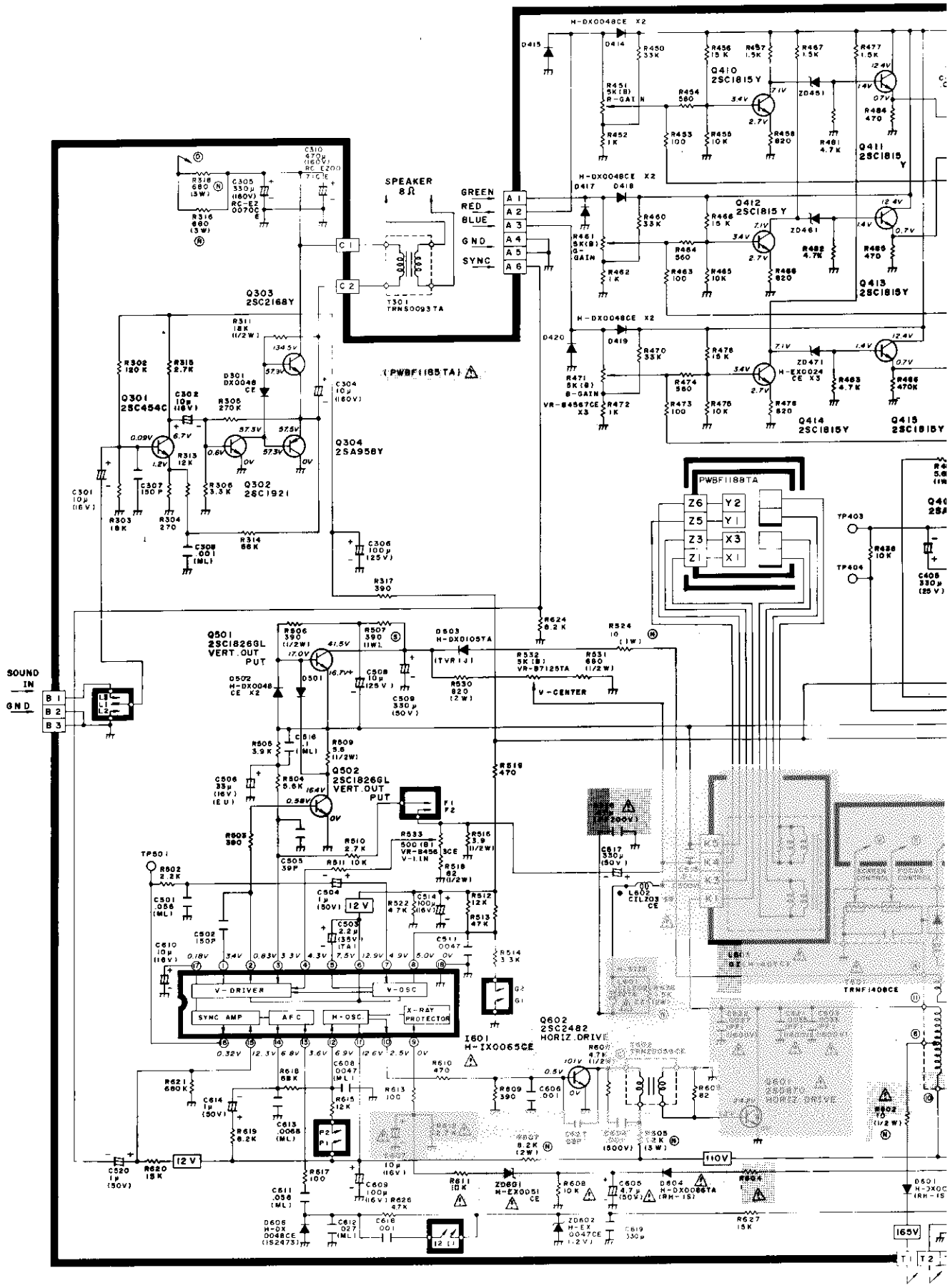

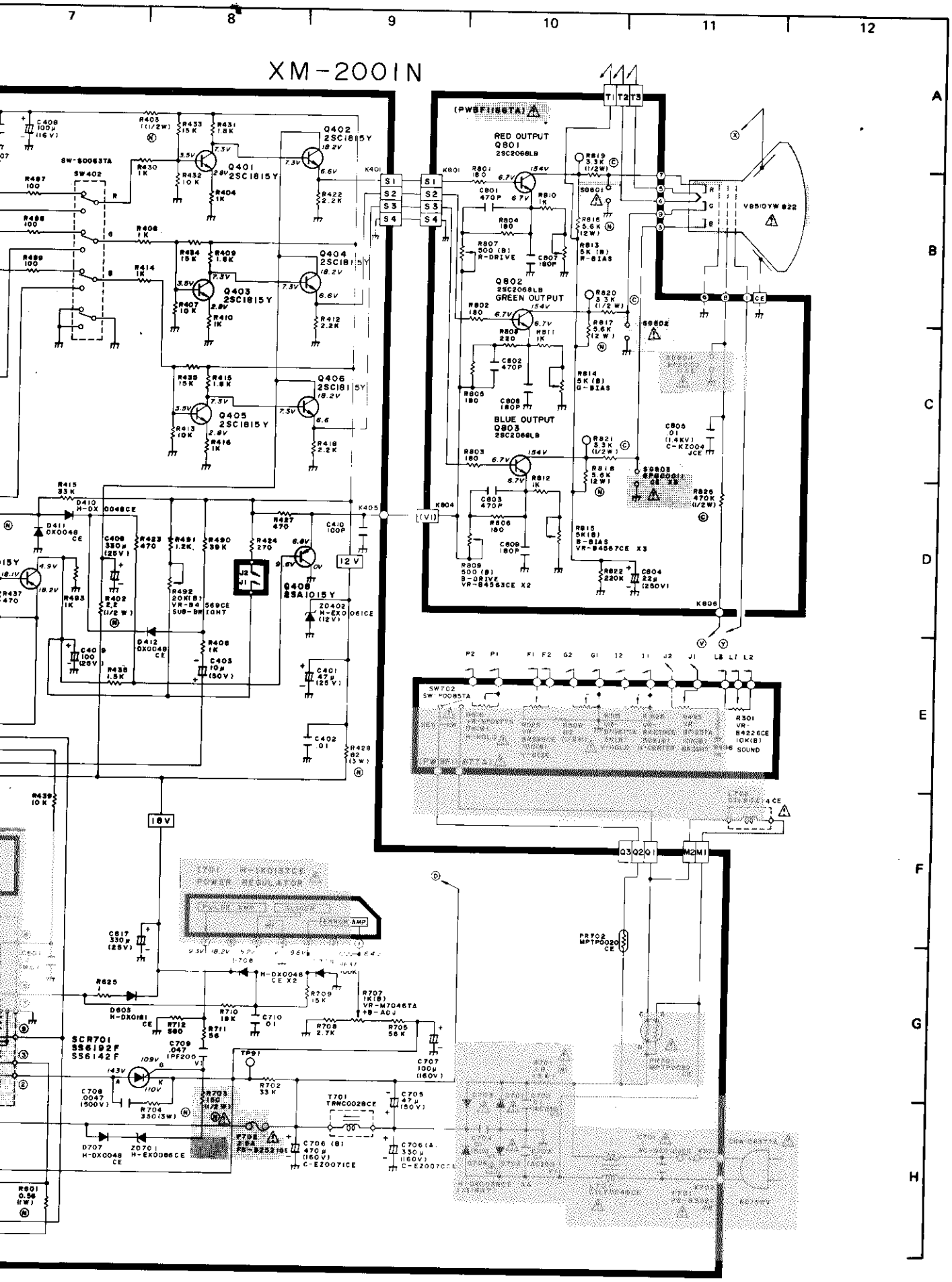
XM-2001N
RED OUTPUT
Q801
2SC2068LB
GREEN OUTPUT
Q802
2SC2068LB
BLUE OUTPUT
Q803
2SC2068LB
Q401
2SC1815Y
Q402
2SC1815Y
Q403
2SC1815Y
Q404
2SC1815Y
Q405
2SC1815Y
Q406
2SC1815Y
Q408
2SA1015Y
SW402
SW-S0063TA
SW702
SW-P0085TA
R301
VR-B4226CE
10K(B)
SOUND
SCR701
SS6192F
SS6142F
T701
TRNC0028CE
PR702
MPTP0020
CE
V8510YW 822
12 V
18V
AMP

1. TRANSISTOR BASE INFORMATION.

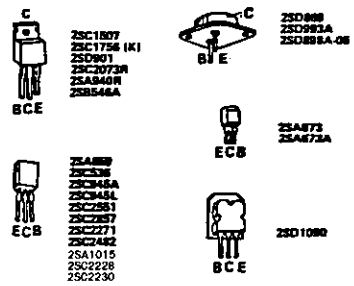


2. RESISTOR, CAPACITOR: INFORMATION.

- RESISTOR – INFORMATION.

1 F 10K
- RESISTOR VALUE IN Ω.
- TYPE.
- POWER RATING.

AS TO 1/4W F-TYPE RESISTORS, RESISTANCE VALUES ALONE ARE GIVEN.

- CAPACITOR – INFORMATION

500 C 100P
- EXPRESSED IN P WHEN THE UNIT IS PF. OTHERWISE OMITTED.
- TYPE
- RATING VOLTAGE (THE UNIT "V" OR "WV" IS OMITTED.)

AS TO "50V, C-TYPE" CAPACITORS VALUE IS ONLY GIVEN.

3. THIS BEING A FUNDAMENTAL SCHEMATIC THERE WILL BE SOME CASES THAT THE REAL CIRCUIT DOES NOT COINCIDE WITH THIS.

RESISTOR TYPE

F: INSULATED FIXED CARBON FILM RESISTOR.
N: INSULATED METAL FILM FIXED RESISTOR.
R: INSULATED FIXED METAL OXIDE FILM RESISTOR.
Y: INSULATED WIRE WOUND FIXED RESISTOR.
C: FIXED CARBON COMPOSITION RESISTOR.

CAPACITOR TYPE

C : FIXED CERAMIC CAPACITOR.
EE : RADIAL TYPE ALUMINUM ELECTROLYTIC CAPACITOR.
F : POLYESTER FILM CAPACITOR.
N : POLYPROPYLENE FILM CAPACITOR.
(NP): NON-POLAR ALUMINUM ELECTROLYTIC CAPACITOR.

## WARNINGS

1. Service work should only be performed by a qualified service technician.
2. An isolation transformer must be used between the AC supply and the AC plug of the monitor before servicing or testing is performed since the chassis and the heat-sink are directly connected to one side of the AC line which could present a shock hazard.
   Supply voltage of the video monitor : AC 90V - 110V 50/60 Hz
3. X-RAY RADIATION WARNING AND PRODUCT SAFETY NOTICE !
   This video monitor contains circuits and components included specifically for safety purpose.
   For continued protection, no changes should be made to original design, and components identified by shading and by ( ⚠ ) on schematic diagram should be replaced with exact factory replacement parts.
   DO NOT degrade the safty of the set through improper servicing.

## Adjustment of Video Monitor

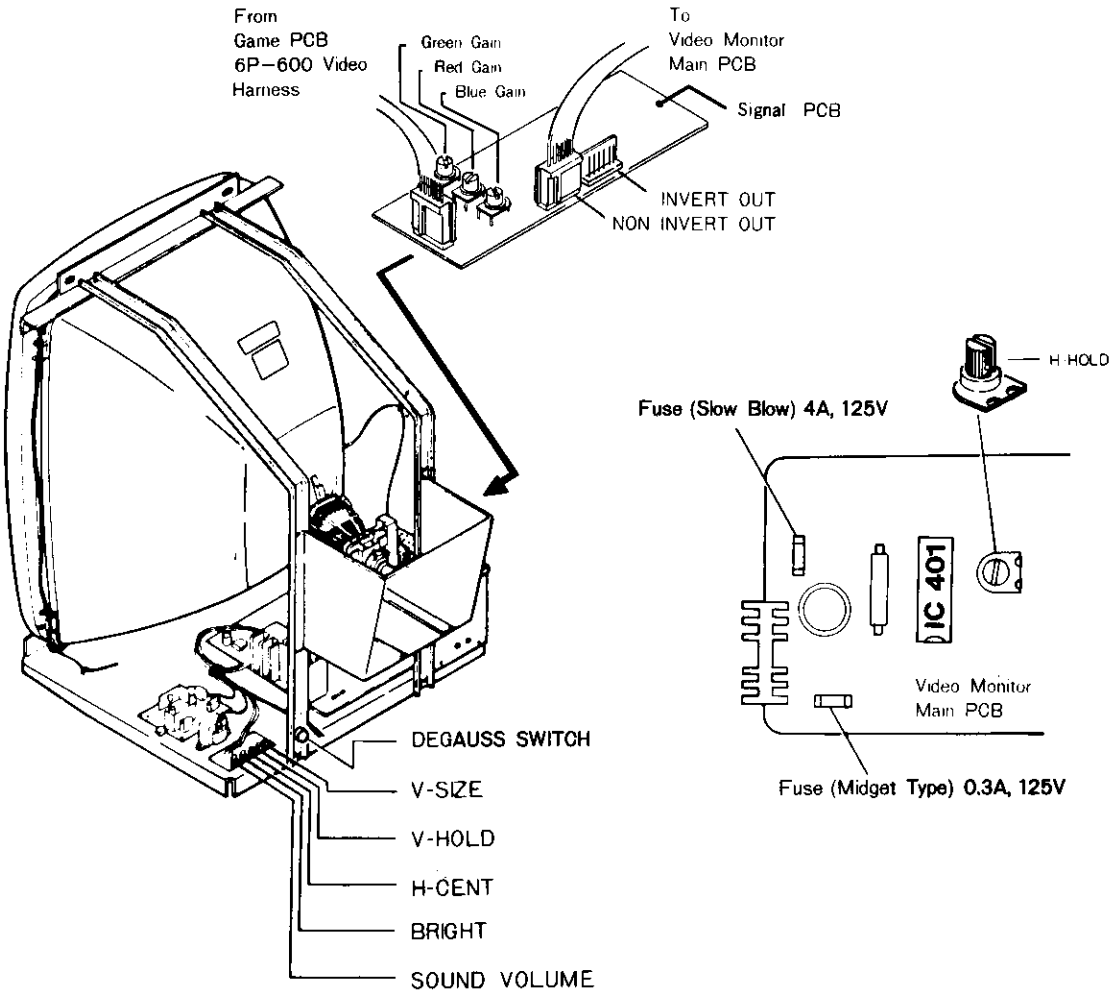


**WARNING**

The Video Monitor contains HIGH VOLTAGE capable of delivering LETHAL quantities of energy. TO AVOID DANGER TO LIFE, don't attempt to service the chassis until all precautions necessary for working on HIGH VOLTAGE equipment have been observed.

# MODEL 20 – Z2 AW

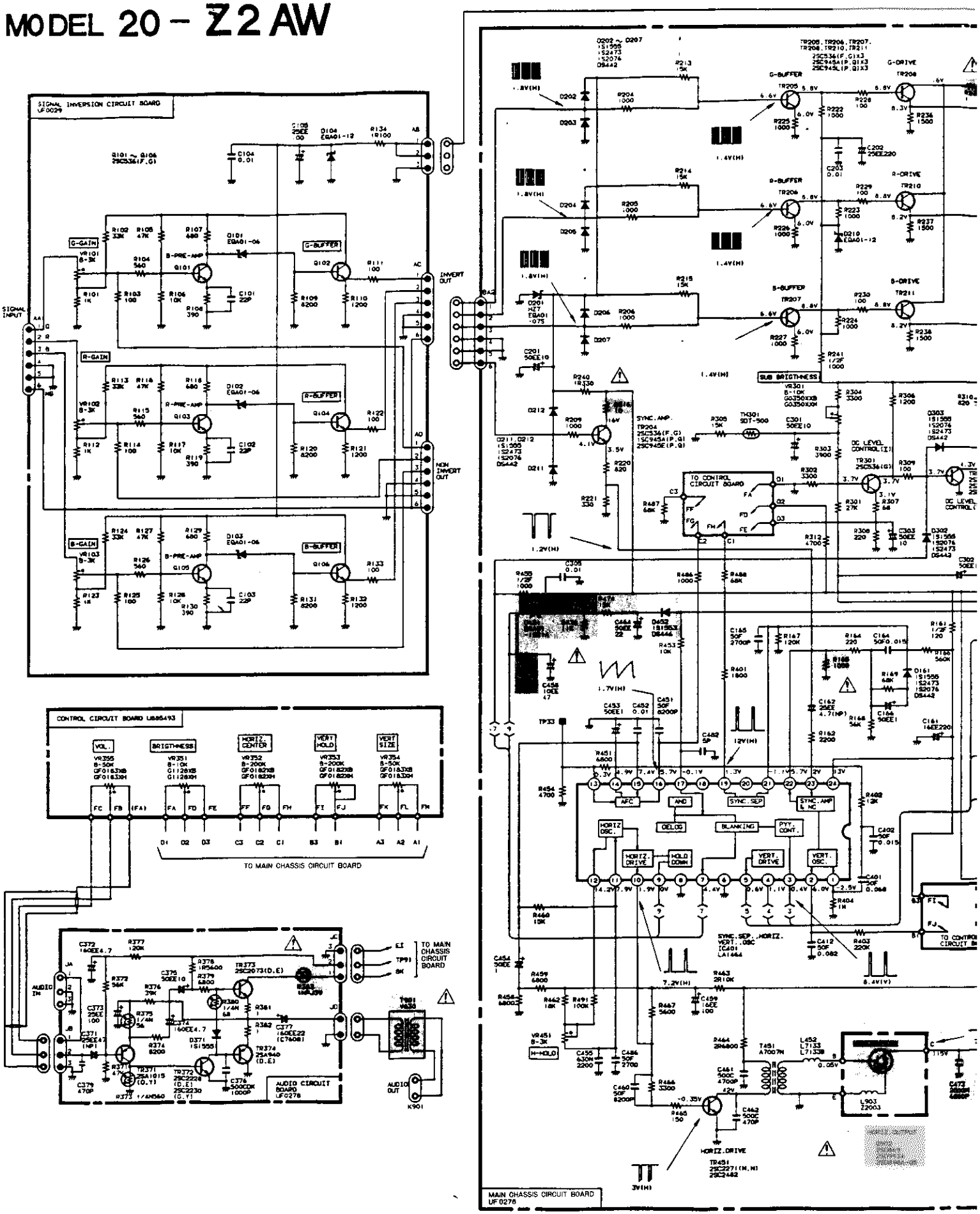

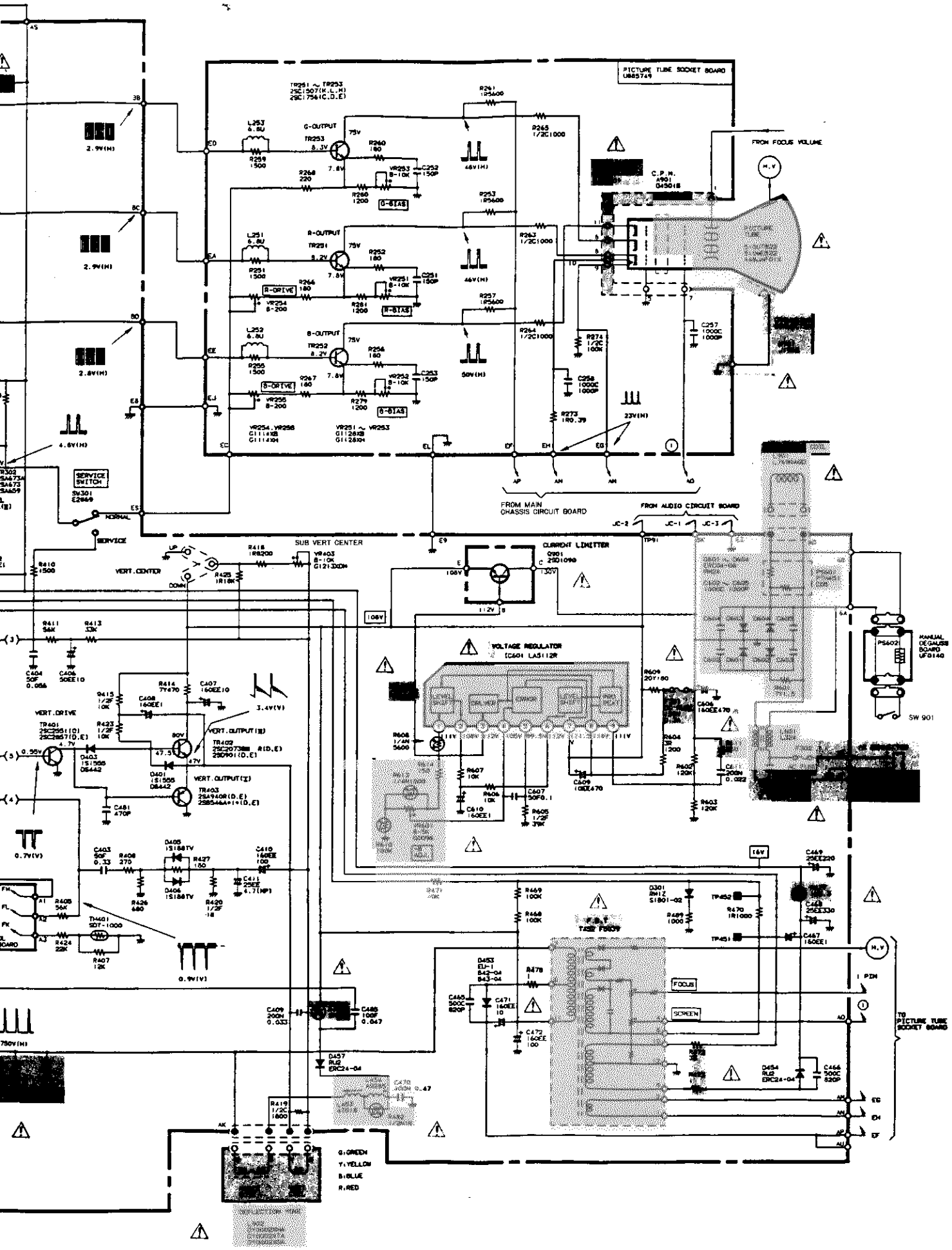


[35 Type] 20-Z2AW SCHEMATIC

© 1985 Nintendo of America Inc.

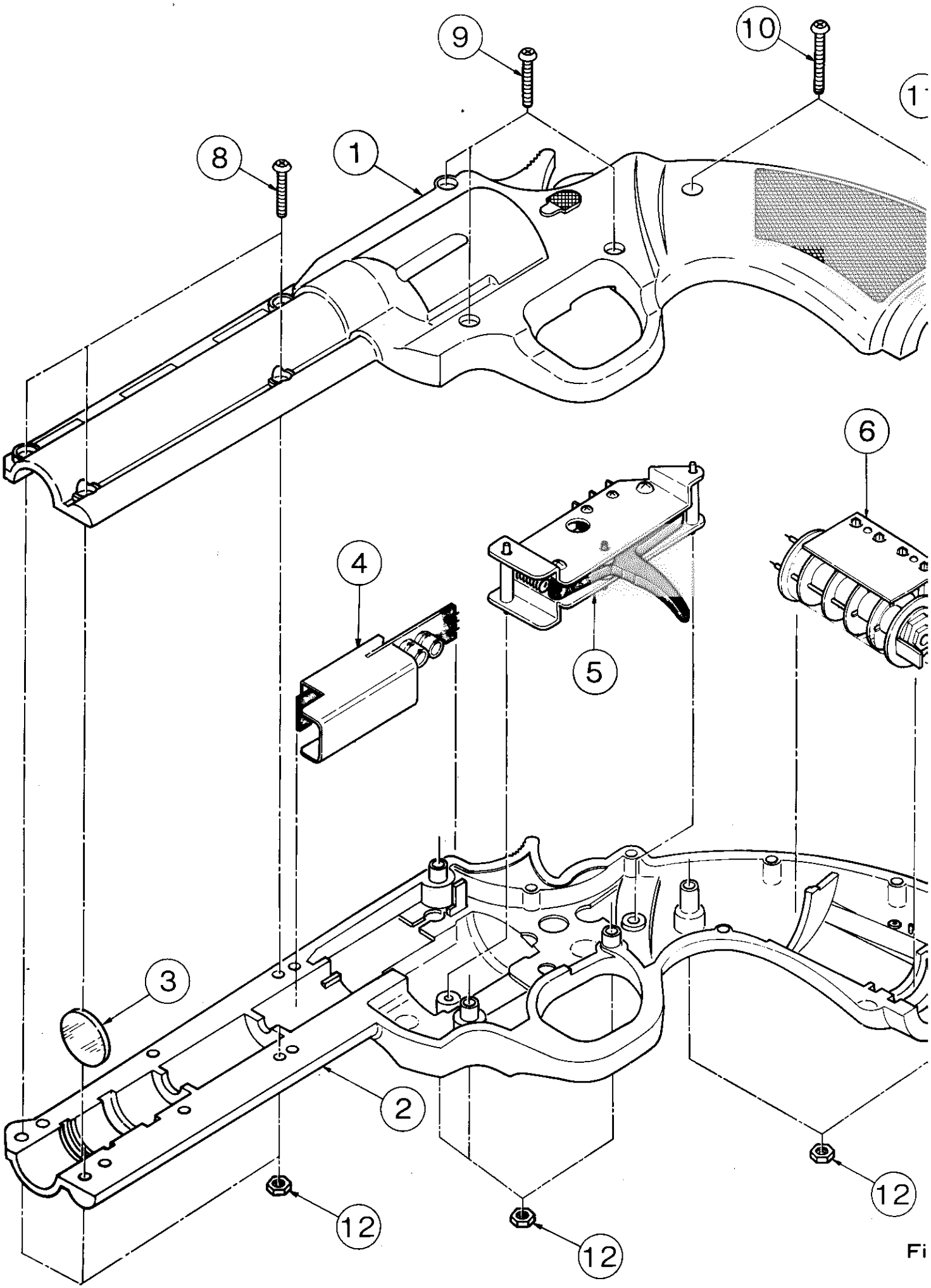


Fi

## Fig.G1 062G2 Gun Assembly : PARTS LIST

| ITEM | PART No. | DESCRIPTION |
|---|---|---|
| 1 | MDSG2-12-11 | 062G2 Gun Housing L |
| 2 | MDSG2-12-12 | 062G2 Gun Housing R |
| 3 | MDSG2-13-11 | 062G2 Lens F100 |
| 4 | MDSG2-10-01 | 062G2 Gun P.C.Board Ass'y Complete |
| 5 | MDSG2-10-03 | 062G2 Trigger Ass'y Complete |
| 6 | MDSG2-10-02 | 062G2 Swivel Contact Ass'y Complete |
| 7 | MDSG2-11-18 | 062G2 Grip Retainer |
| 8 | MDSG2-51-11 | LH-3 Screw 3x8 Black |
| 9 | MDSG2-51-12 | LH-3 Screw 3x16 Black |
| 10 | MDSG2-51-13 | LH-3 Screw 3x20 Black |
| 11 | MDSG2-51-20 | LH-3 Screw 3x18 Nickel |
| 12 | MDSG2-53-15 | Nut M3 Black |

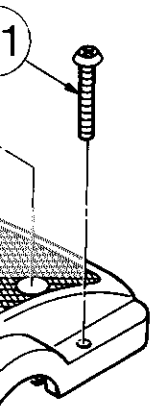


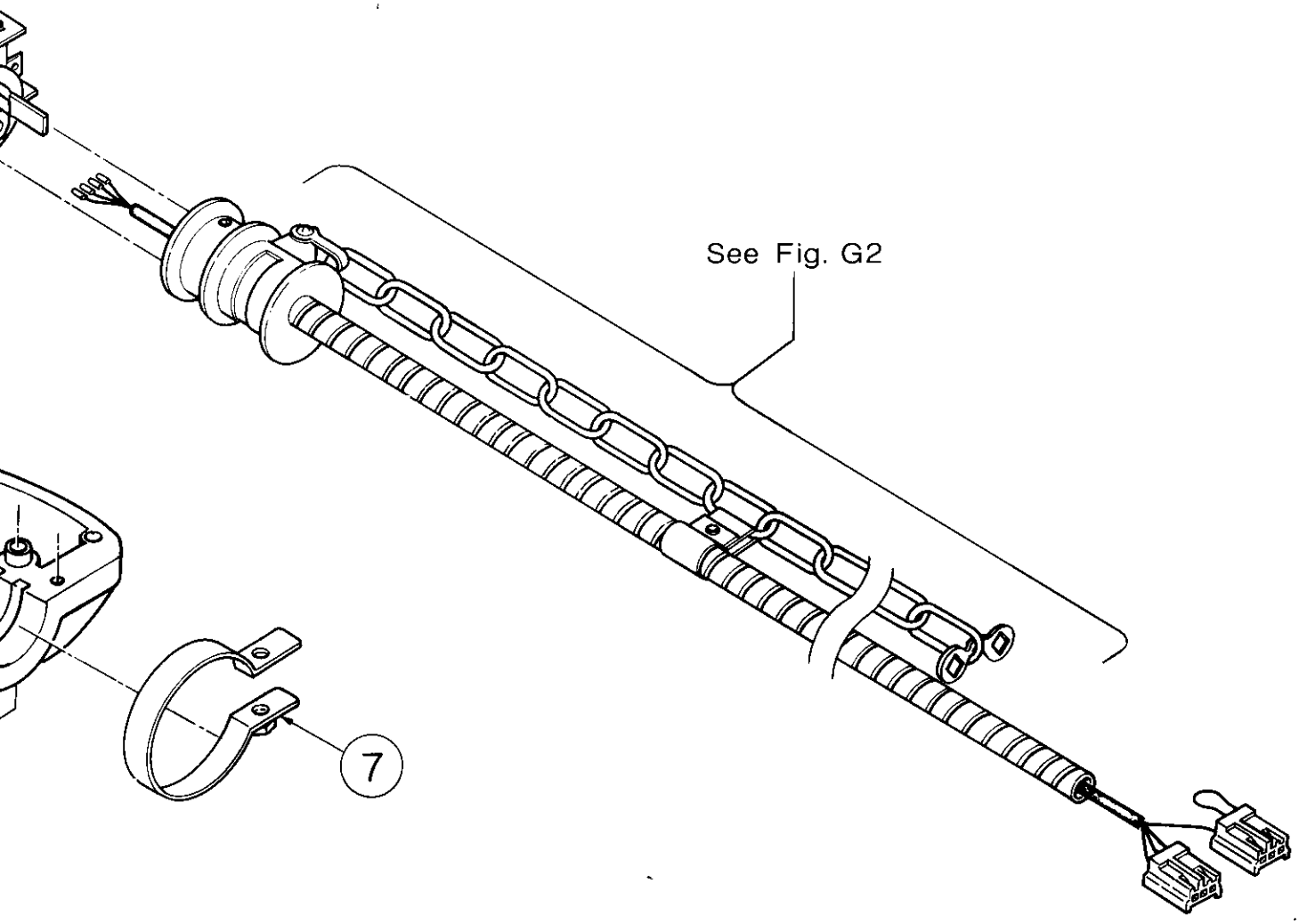


g.G1

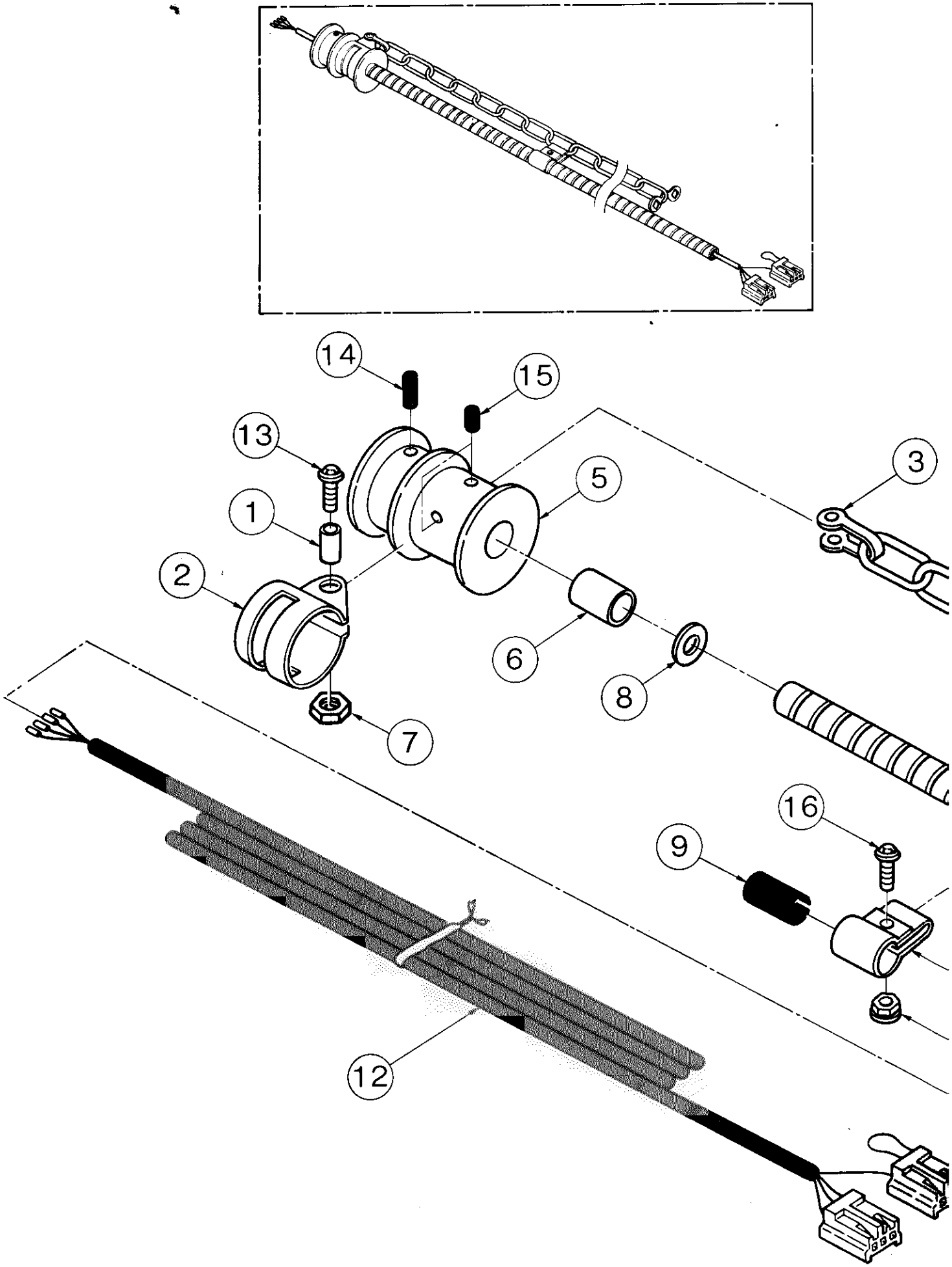


Fig.G2

Fig.G2

| ITEM | PART No. | DESCRIPTION |
|---|---|---|
| 1 | MDSG-11-16 | 062 Chain Frame Collar 4D |
| 2 | MDSG2-11-21 | 062G2 Chain Frame |
| 3 | MDSG2-11-17 | 062G2 Gun Chain Hook G |
| 4 | MDSG2-11-20 | 062G2 Chain 900L |
| 5 | MDSG2-11-11 | 062G2 Grip Swivel Frame |
| 6 | MDSG2-11-13 | 062G2 Cord Stop Collar 6.4D |
| 7 | MDSG2-53-14 | Nut M3 Nickel |
| 8 | MDSG2-54-11 | Washer M4.5 |
| 9 | MDSG2-43-11 | Double Sided Adhesive Tape |
| 10 | MDSG-11-24 | 062 Gun Flexible Cable 1000L |
| 11 | MDSG2-11-19 | 062G2 Chain Ring Frame |
| 12 | MDSG2-41-11 | 062G2 Gun Harness 4C-1600L |
| 13 | MDSG2-51-15 | LH-3 Screw 3x10 Nickel |
| 14 | MDSG2-51-16 | Set Screw 4x10 |
| 15 | MDSG2-51-17 | Set Screw 4x6 |
| 16 | MDSG2-51-14 | LH-3 Screw 3x6 Nickel |
| 17 | MDSG2-53-12 | Flange Nut M3 Nickel |
| 18 | MDSG2-63-13 | 062 Gun Chain Hook C |

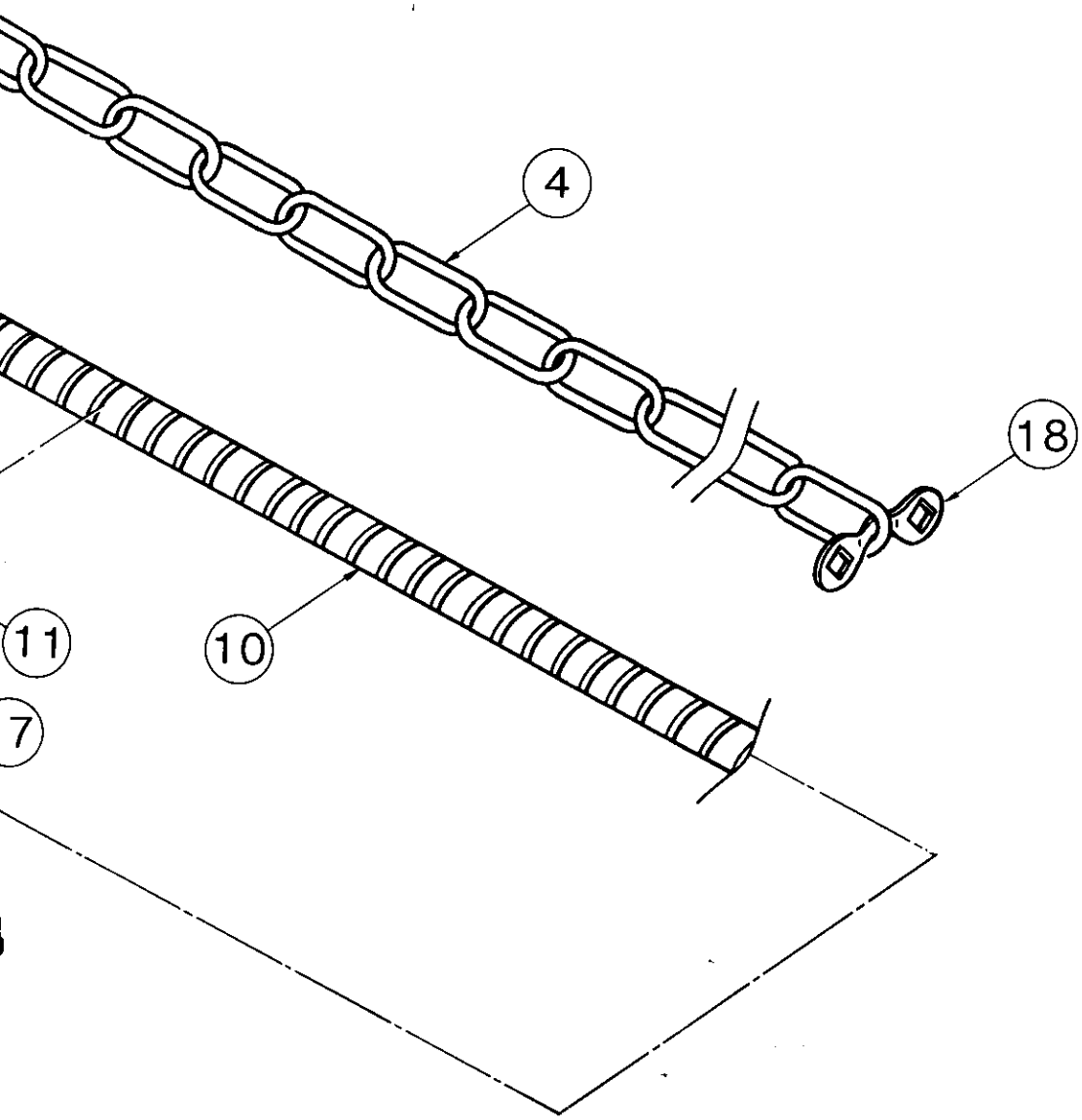

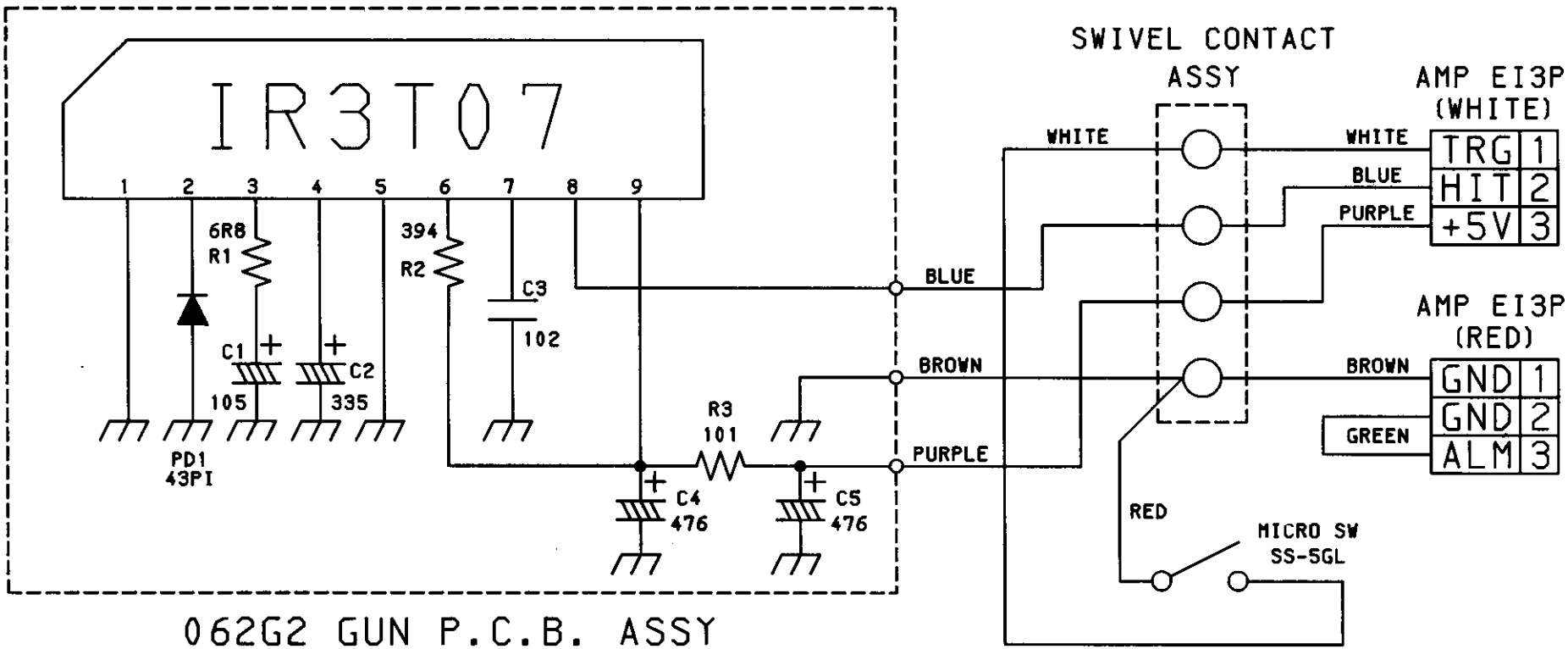


062G2 GUN P.C.B. ASSY

| | CIRCUIT DIAGRAM | | | |
|---|---|---|---|---|
| PARTS NO | PARTS NAME | MATERIAL DESCRIPTION | QTY | REMARKS |
| DESIGN T.SUMI | DATE 25-APR-86 | SCALE / | SIZE A4 | TRIGONOMETRY |
| CHECK | | NAME 062G2 GUN | | |
| APPROVE | | | | |
| NINTENDO | | DRAWING NO 412 | | |

| MARK | CHANGE NOTE | DESIGN | APPROVE |
|---|---|---|---|
| | | | |