Predicting Personal Attitudes Using Contextual Microblog Activity Logs

Md Enamul Haque, Eddie C Ling, Aminul Islam, and Mehmet Engin Tozal

Network Science Research Group
School of Computing and Informatics
University of Louisiana, Lafayette, LA 70504, USA

February 3-5, 2020
ICSC 2020, San Diego, California

Overview

- Introduction
- Problem Statement
- Proposed Approach
- Experiments
- Conclusions and (Future Works)

Introduction

Images © Wikipedia and CNN

Introduction

NEWS

Social Media Becomes a Savior in Hurricane Harvey Relief

"I think it really shows the great nature of humanity and people really do want to help each other and they have this platform to do it," Matherly said.

SOCIAL MEDIA

How Twitter emerged as a key comms channel during Harvey

Though the Coast Guard asked people to call, not tweet, for help, many turned to the platform seeking aid, spreading information and offering help amid and after the powerful storm.

Popular Latest

The Atlantic

TECHNOLOGY

Using Twitter to Save a Newborn From a Flood

Search and rescue is evolving fast in the social-media age.

MARINA KOREN AUGUST 28, 2017

THE WALL STREET JOURNAL.

Home World U.S. Politics Economy Business Tech Markets Opinion Life & Arts Real Estate WSJ. Magazine

TECH

Hurricane Harvey Victims Turn to Social Media for Assistance

With local 911 systems failing, residents are taking to Facebook and Twitter

Introduction

- Rescue requests
- Food and shelter
- Safe route out of town
- Mobilizing volunteers
- Information about what is needed
- Information about what is abundant

Figure: An example tweet during Hurricane Harvey to let affected people know about shelters.

Problem Statement

Problem Statement

Given a tweet, does the user have positive attitude towards a specific event?

$$\arg\max_{y \in Y} \; P(l = y \mid t, \mathcal{M}(\theta), \mathcal{C}) \tag{1}$$

where t is a test tweet
l is the binary tweet label
$\mathcal{M}$ refers to corpus model
θ denotes parameters of $\mathcal{M}$
$\mathcal{C}$ is a classification model
Applications: Social awareness, Volunteer recommendation, Donation collection,

Proposed Approach

Proposed Approach

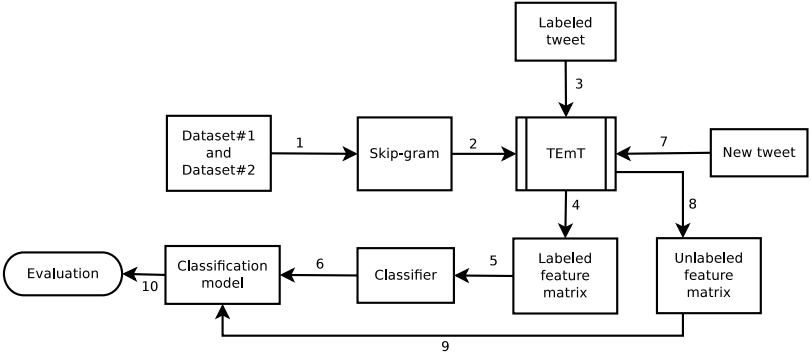

Figure: An overview of the experimental flow of our approach to predict domain specific personal attitudes using feature generation and supervised learning.

Keyword Selection

Date range: D1: Jan 1, 2017- Jul 16, 2017 and D2: July 17 - Oct 16, 2017
Seed keywords: flood, disaster, hurricane, hurvey, Houston
Final keywords:

#hurricaneharvey	#harvey	flood	hurricane	#hurricane
#prayforhouston	#houstonstrong	harvey	#houstonflood	flooded
water	#harvey2017	safe	#hurricaneharvey2017	#flood
need	center	#flooding	#prayfortexas	#texasstrong
victims	storm	affected	prayers	#harveyrelief
#help	rescue	#hurricanharvey	pray	helping
praying	donations	#rain	relief	help

Table: Keywords used for tweet collection and labeling.

Tweet Labeling

Sample tweets	Label
There are other channels to go through to help, if you can not find a more personal way to... https://www. instagram.com/p/BYYqNbnFHK8/ #1	1
This for all the people affected in Texas by hurricane Harvey SN I have friends and a small... https://www. instagram.com/p/BYaQ6vog4R6/	1
Pasadena Rodeos final night. #patgreen #aintnokneelinhere @Pasadena... https://www. instagram.com/p/BZsHaoyBzATP ekBLgV2iH3ay7_rkI2WJcrPrc00/	0
I love details like this...not just a flower or a candle—a mood. A motif. Just lovely. • In... https://www. instagram.com/p/BaU8H_pIH-z/	0

Table: A few sample tweets that are labeled as positive, 1, or non-positive, 0.

Data Summary

Dataset	% of +ve attitude	Unique user count	Tweet count	Max tweet length	Min tweet length	Average tweet length
Dataset #1	57.87%	18269	153994	50	1	14.41
Dataset #2	35.88%	32980	378120	49	1	14.12

Table: Summary statistics pertaining to the collected tweets.

Corpus Model Generation

$$v = \frac{1}{|S|} \sum_{i=1}^{|S|} \texttt{TEmT}[t_i] \tag{2}$$

$$\frac{1}{L} \sum_{m=1}^{L} \sum_{-c \leq j \leq c, j \neq 0} \log p(t_{m+j} | t_m) \tag{3}$$

$$p(t_O | t_I) = \frac{\exp({v'_{tO}}^{\top} v_{tI})}{\sum_{t=1}^{T} \exp(v'^{\top}_t v_{tI})} \tag{4}$$

Corpus Model Generation

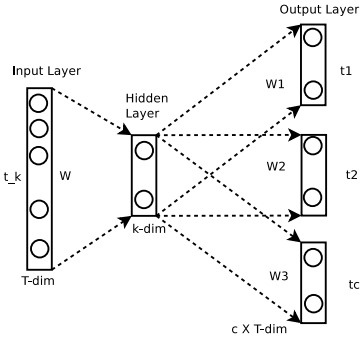

Figure: Skip-gram model predicting context terms given an input tweet term (k-th term of a tweet). This architecture provides a vector for all the context terms of length c. W represents the weights.

Feature Generation

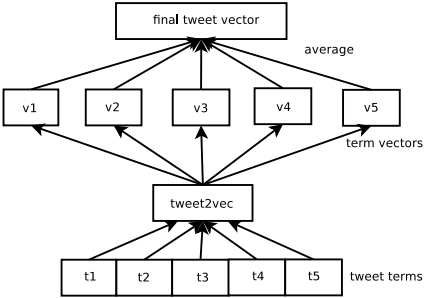

Figure: A framework for learning term vectors. This diagram is shown for an example tweet with five terms $(t_1, t_2, t_3, \ldots, t_5)$ and their corresponding vectors $(v_{t_1}, \ldots, v_{t_5})$ of length k which is chosen based on empirical results.

Implementation Algorithms

Algorithm 1 TEmT corpus model generation

Input: input tweets ▷ corpus training vocabulary
Output: *model* ▷ corpus model
Initialization : vocab = $\emptyset$, model = $\emptyset$

```
generate terms from tweets
for each tweet term do
    vocab = vocab ∪ term
end for
model = build skip_gram model using Equation 3 and 4
from vocab.
return model
```

Algorithm 2 Feature matrix generation

Input: input tweets ▷ training or test tweets
Output: feature matrix, $\boldsymbol{V}$
Initialization: n, k, $\boldsymbol{V} = \mathbf{0}_{n,k+1}$, $\boldsymbol{v} = \mathbf{0}_k$

```
for i = 1 to n do
    t = i^th tweet
    l = label of i^th tweet {0,1}                ▷
    known for training tweets only
    model = TEmT corpus model
    s = length of t
    for j = 1 to s do
        v = v + model[t[j]]
    end for
    v = v / s
    V_{i,1:k} = v
    V_{i,k+1} = l
end for
return V
```

Corpus Model Generation Time

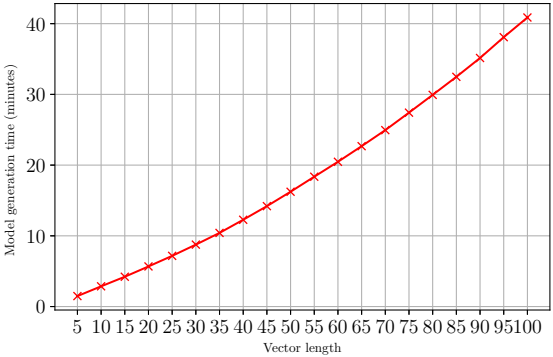

Figure: TEmT corpus model generation time for different vector lengths.

Experiments

Evaluation Results

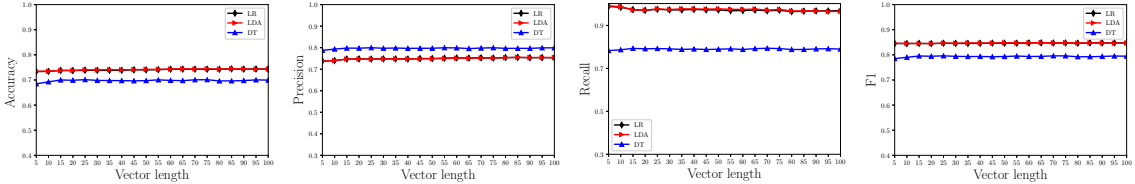

(a) Accuracy (b) Precision (c) Recall (d) F1

Figure: Classification accuracy, precision, recall and F1 scores for different classification algorithms based on varying vector lengths.

Classifier	Parameters	Avg Acc	Acc@20	Avg Prec	Prec@20	Avg Rec	Rec@20	Avg F1	F1@20
LDA [1]	solver = SVD	0.741±0.006	0.738	0.749±0.009	0.748	0.974±0.013	0.971	0.847±0.002	0.845
LR [2]	solver=liblinear	0.740±0.006	0.738	0.750±0.009	0.748	0.972±0.011	0.970	0.846±0.002	0.845
DT [3]	none	0.698±0.008	0.699	0.797±0.006	0.798	0.790±0.005	0.791	0.794±0.005	0.794

Table: Accuracy, precision, recall, and F1 scores for different classifiers.

Conclusions & Future Works

Extensions can be:

- Multi-category recommendation such as volunteer, donation, rescue, and shelters.
- Image and video based analysis.
- Labeling can be crowdsourced (Labelbox, Mechanical Turk)

Questions?

https://github.com/enamul-haque/TEmT/