FLAT ROD

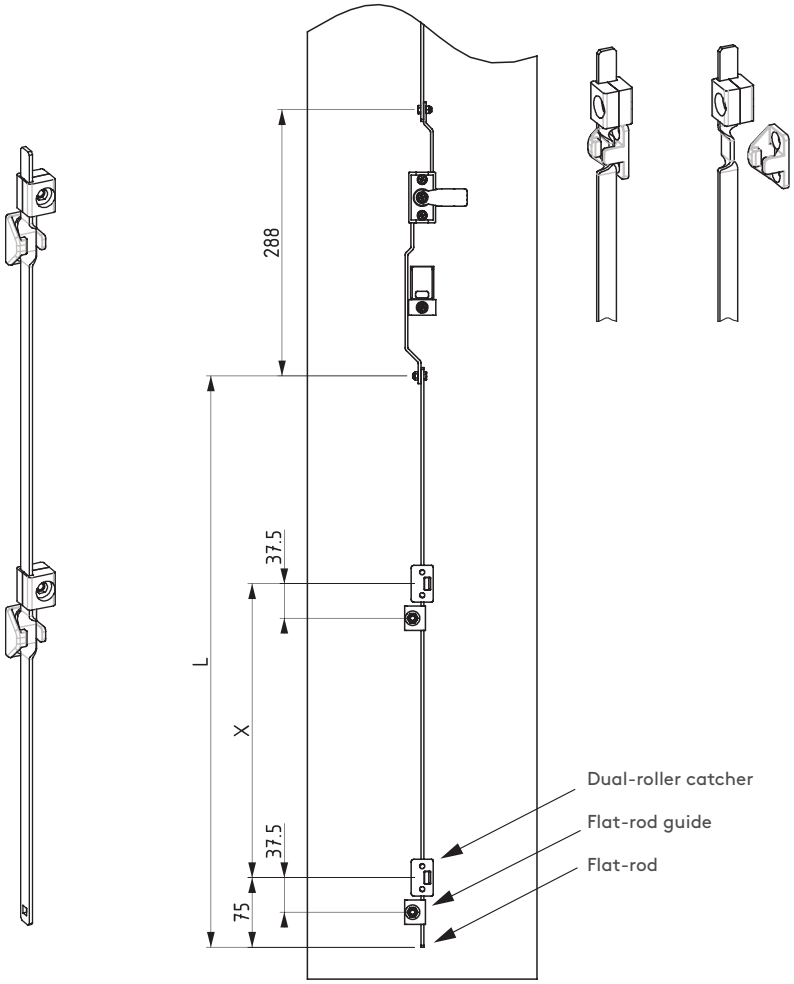

MATERIAL
Steel

FINISH
Zinc plated

DUAL-ROLLER CATCHER

LKY3

Group Code	Version	Length	Locking
IL	4	L	X

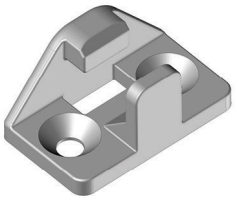

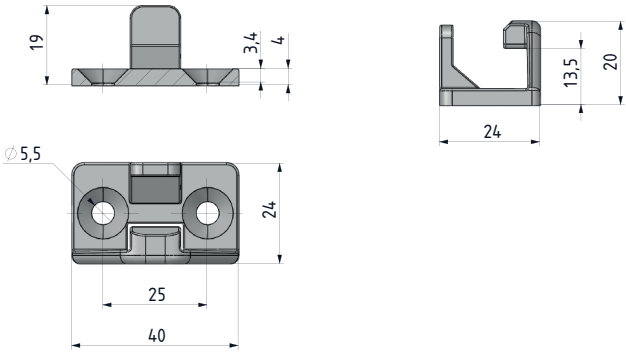

MATERIAL
Zamak DIN-EN 1774-ZnAl4Cu1

FINISH
Zinc plated

tel | +90 212 721 44 44 fax | +90 212 721 44 45