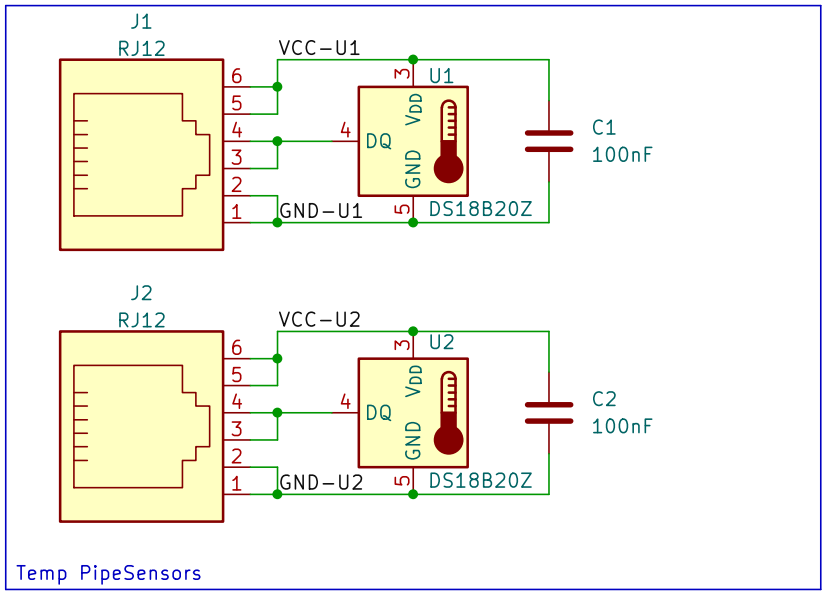


Reviewed:

Author: Bram Busch, Daan Tellegen

**Research Group Energy Transition. Windesheim Univeristy of Applied Sciences**

Sheet: /

File: PipeClamp.kicad_sch

***Title: NFH PipeSensors***

| | | |
|---|---|---|
| Size: A5 | Date: 2024-04-17 | **Rev:** |
| KiCad E.D.A. 8.0.3 | | Id: 1/1 |