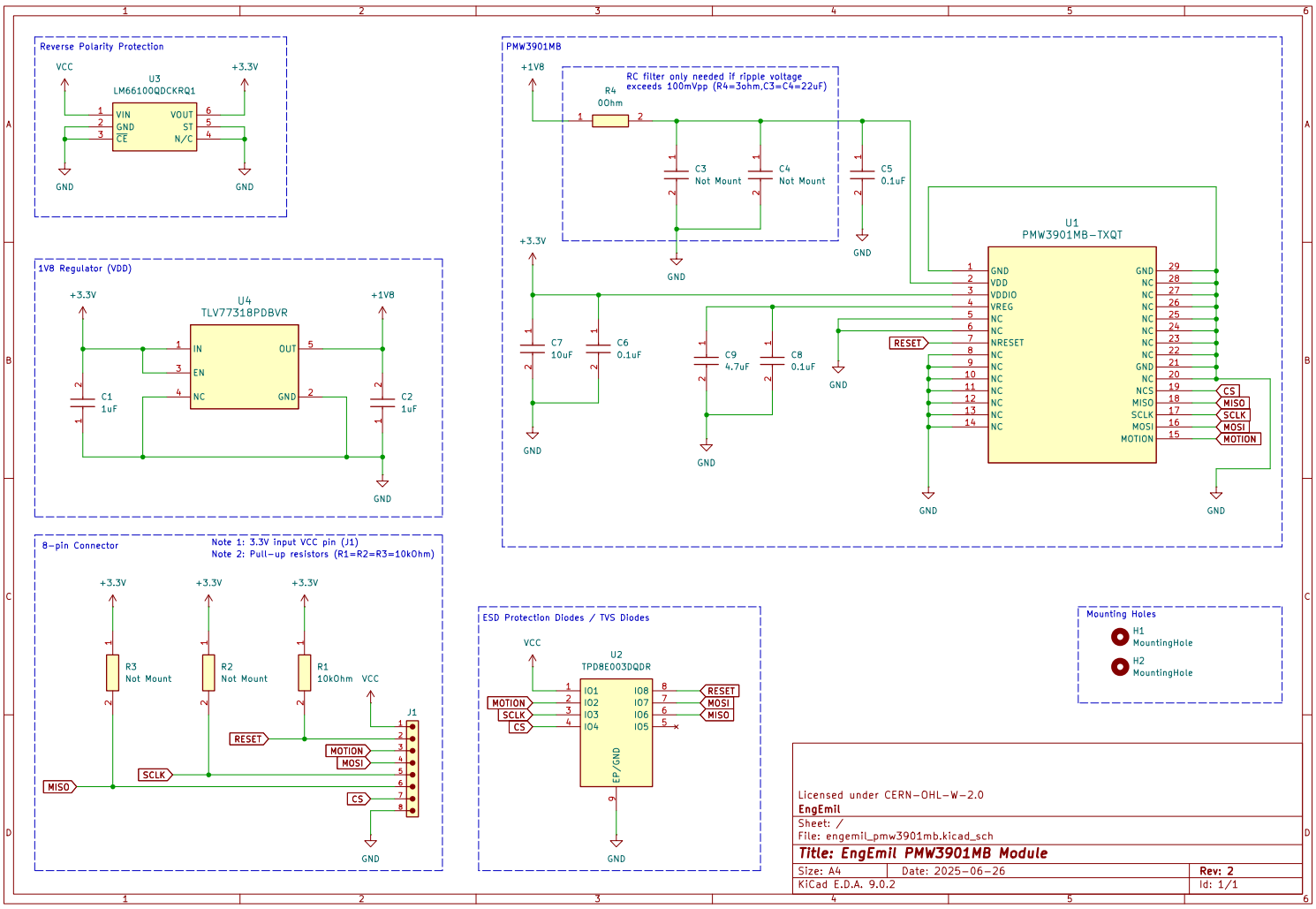
Reverse Polarity Protection
U3
LM66100QDCKRQ1
VCC
+3.3V
VIN
GND
CE
VOUT
ST
N/C
GND
1V8 Regulator (VDD)
U4
TLV77318PDBVR
+3.3V
+1V8
IN
EN
NC
OUT
GND
C1
1uF
C2
1uF
8-pin Connector
Note 1: 3.3V input VCC pin (J1)
Note 2: Pull-up resistors (R1=R2=R3=10kOhm)
R3
Not Mount
R2
Not Mount
R1
10kOhm
VCC
J1
RESET
MOTION
MOSI
SCLK
MISO
CS
PMW3901MB
+1V8
RC filter only needed if ripple voltage exceeds 100mVpp (R4=3ohm,C3=C4=22uF)
R4
0Ohm
C3
Not Mount
C4
Not Mount
C5
0.1uF
U1
PMW3901MB-TXQT
GND
VDD
VDDIO
VREG
NC
NRESET
NCS
MISO
SCLK
MOSI
MOTION
C7
10uF
C6
0.1uF
C9
4.7uF
C8
0.1uF
ESD Protection Diodes / TVS Diodes
U2
TPD8E003DQDR
IO1
IO2
IO3
IO4
IO8
IO7
IO6
IO5
EP/GND
Mounting Holes
H1
MountingHole
H2
MountingHole
Licensed under CERN-OHL-W-2.0
EngEmil
Sheet: /
File: engemil_pmw3901mb.kicad_sch
Title: EngEmil PMW3901MB Module
Size: A4
Date: 2025-06-26
Rev: 2
KiCad E.D.A. 9.0.2
Id: 1/1