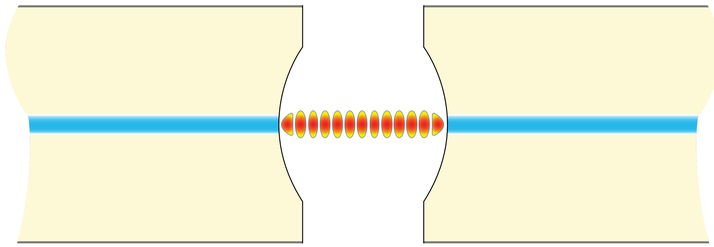

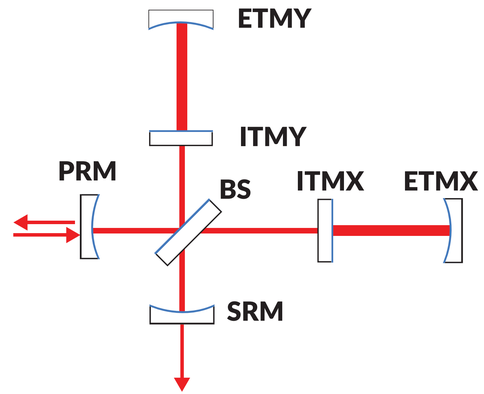

Signal Recycling Cavity

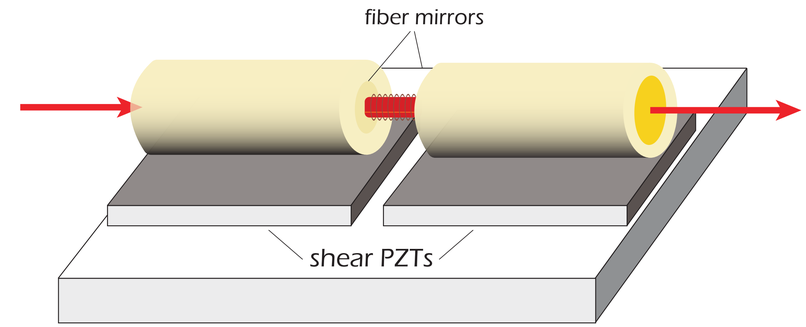

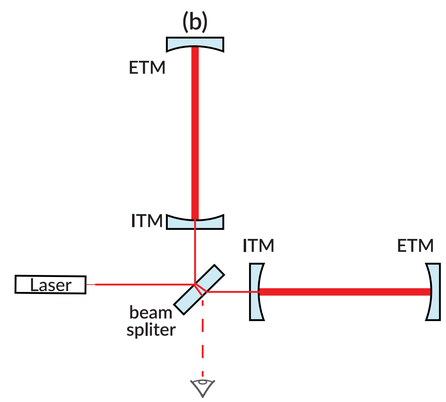

Arm Cavity

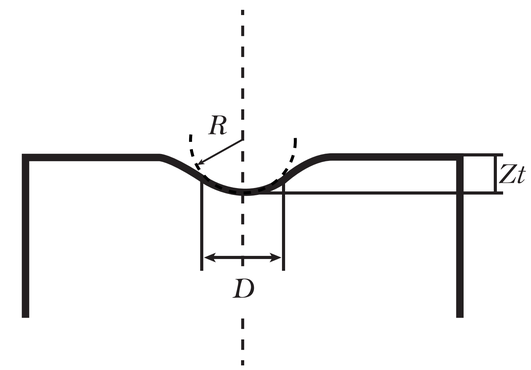

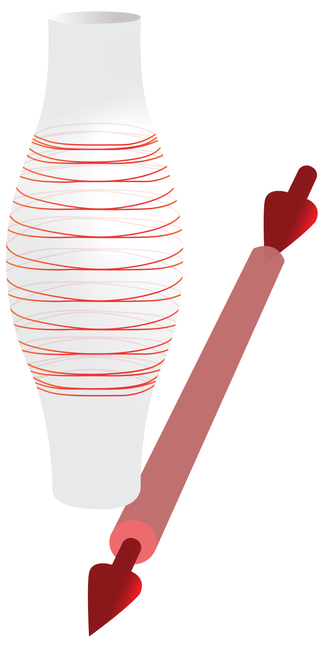

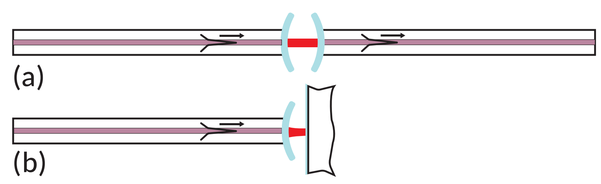

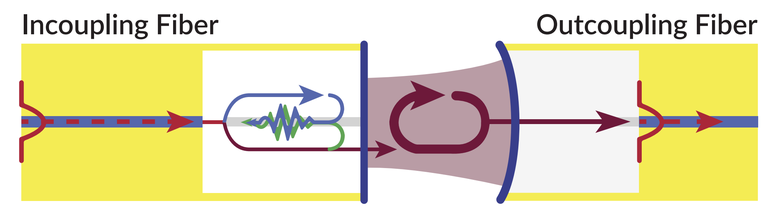

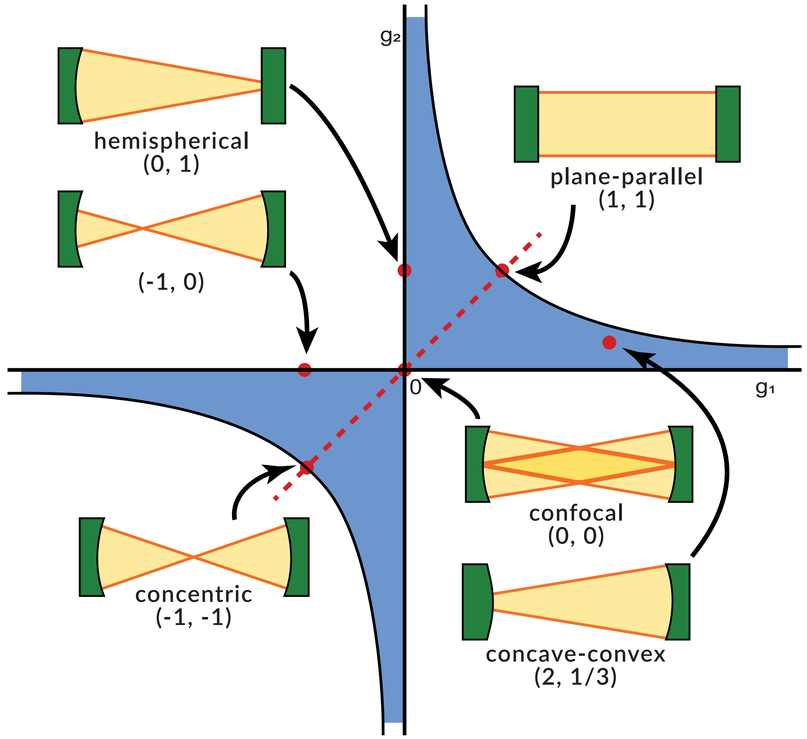
g2
g1
0
hemispherical
(0, 1)
(-1, 0)
plane-parallel
(1, 1)
confocal
(0, 0)
concentric
(-1, -1)
concave-convex
(2, 1/3)

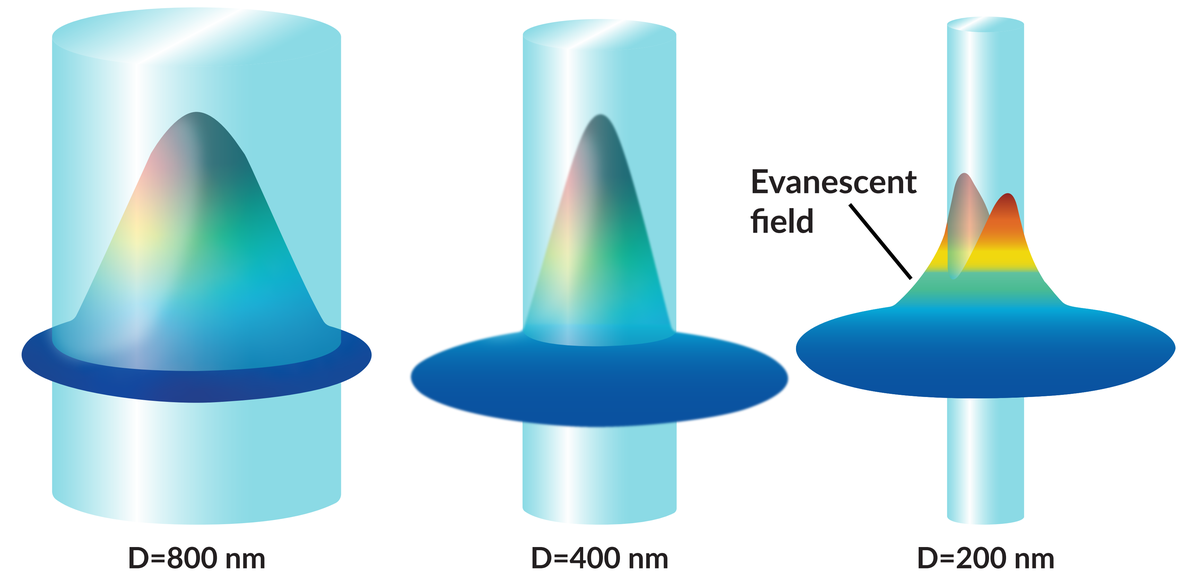
Evanescent
field
D=800 nm
D=400 nm
D=200 nm

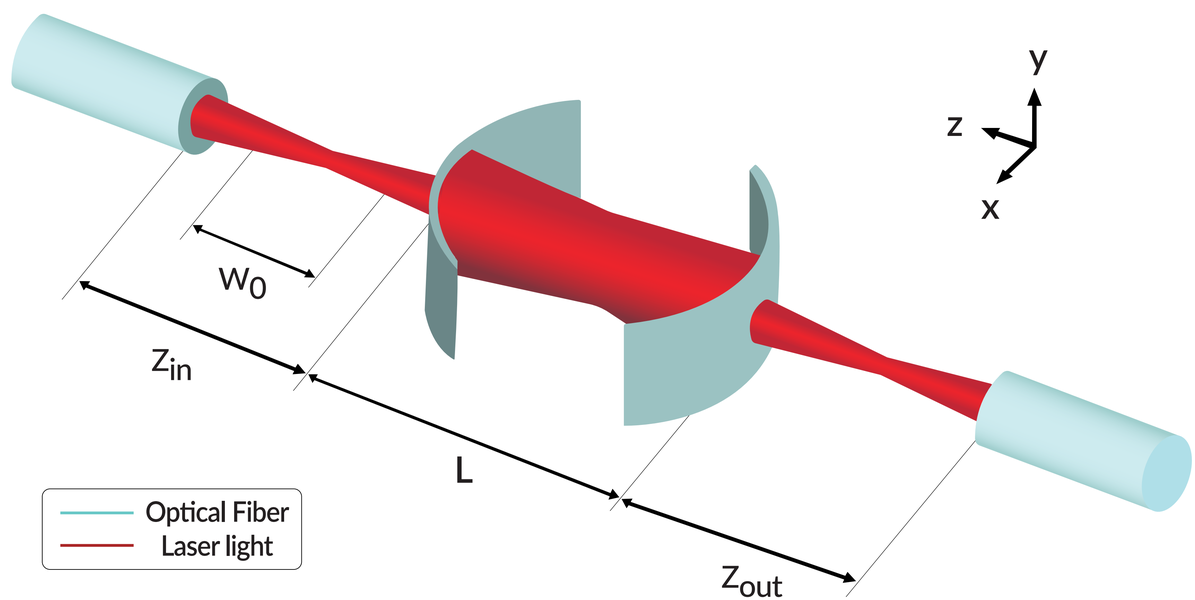
y
z
x
W0
Zin
L
Zout
Optical Fiber
Laser light

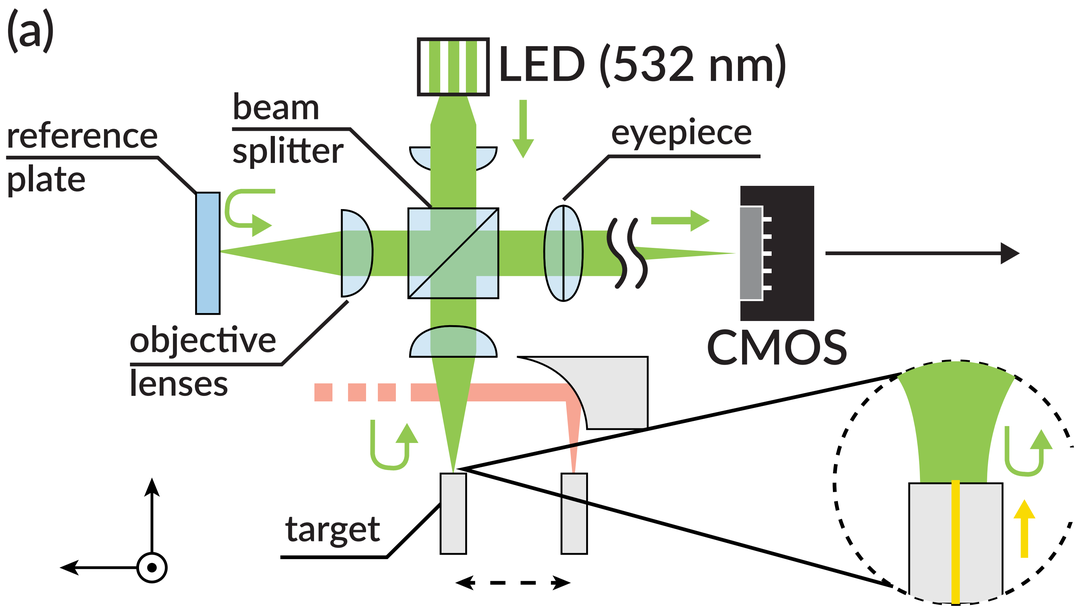
(a)
LED (532 nm)
reference plate
beam splitter
eyepiece
objective lenses
CMOS
target

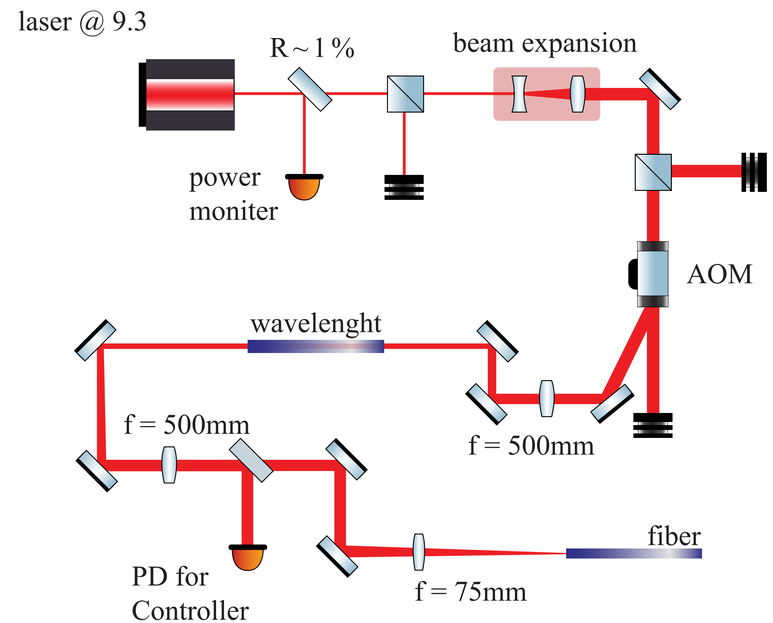
laser @ 9.3
R ~ 1 %
beam expansion
power moniter
AOM
wavelenght
f = 500mm
f = 500mm
fiber
PD for Controller
f = 75mm

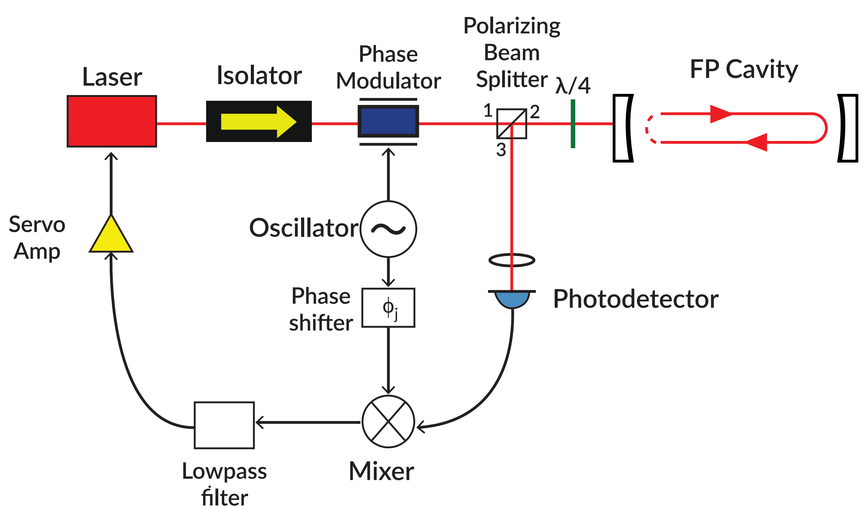
Laser
Isolator
Phase Modulator
Polarizing Beam Splitter
λ/4
FP Cavity
1
2
3
Servo Amp
Oscillator
Phase shifter
Photodetector
Lowpass filter
Mixer

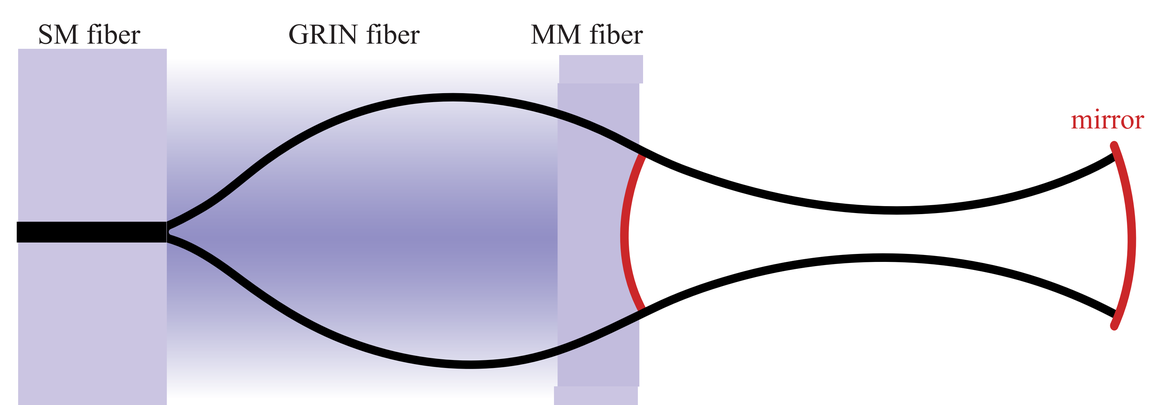
SM fiber
GRIN fiber
MM fiber
mirror

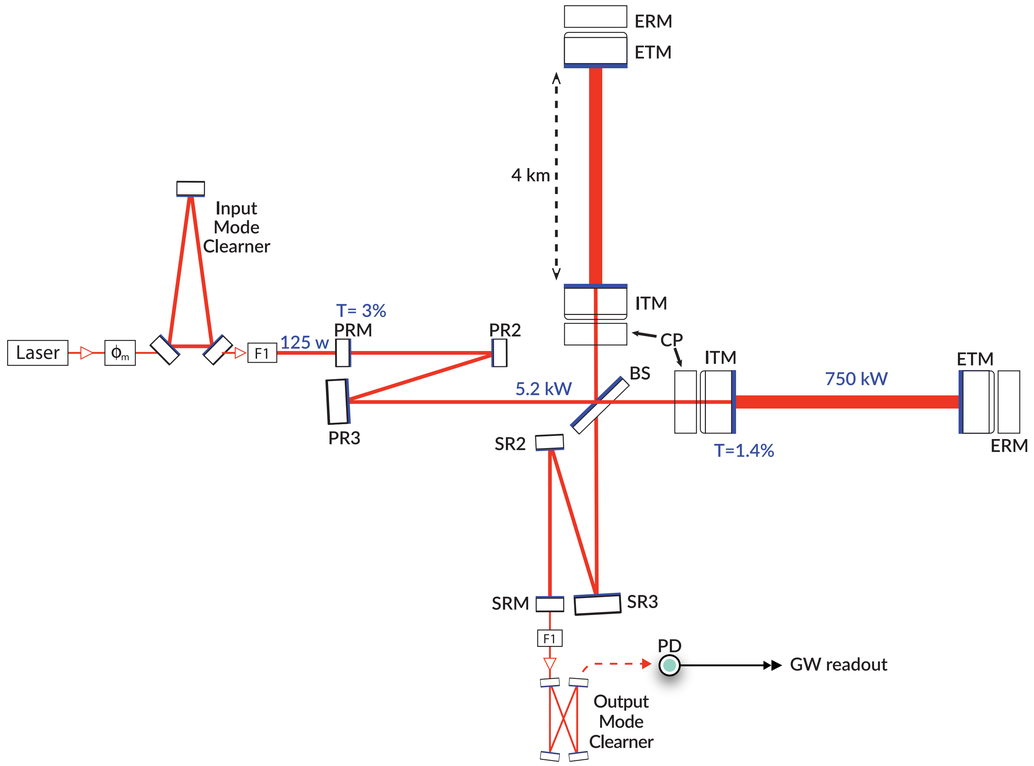
ERM
ETM
4 km
Input
Mode
Clearner
ITM
T= 3%
PRM
PR2
CP
Laser
ϕ_m
F1
125 w
ITM
ETM
BS
750 kW
5.2 kW
PR3
SR2
T=1.4%
ERM
SRM
SR3
F1
PD
GW readout
Output
Mode
Clearner

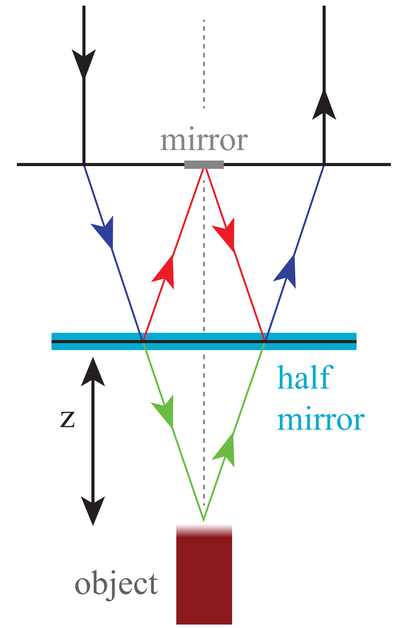
mirror
half
mirror
z
object

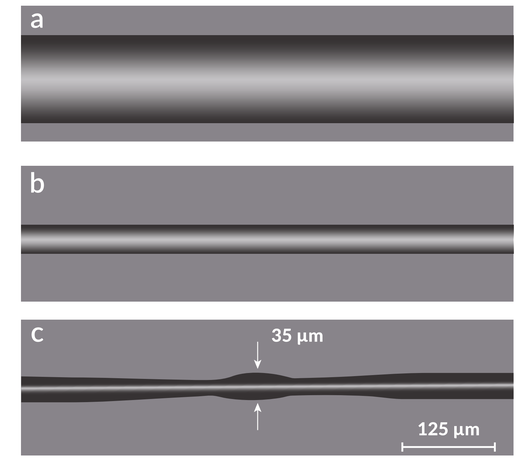
a
b
c
35 µm
125 µm

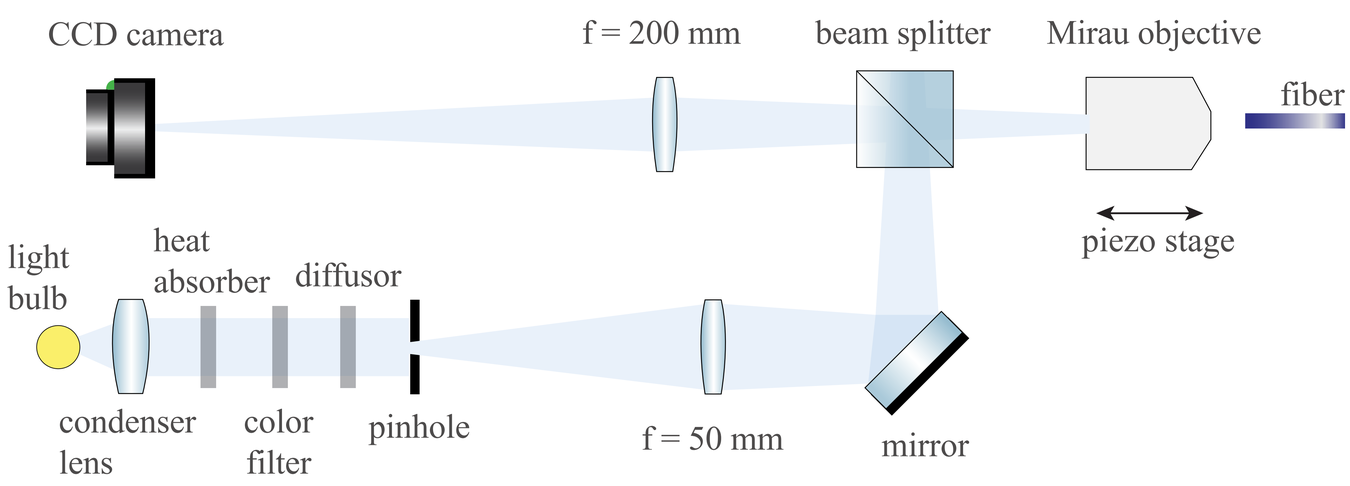
CCD camera
f = 200 mm
beam splitter
Mirau objective
fiber
piezo stage
light
bulb
heat
absorber
diffusor
condenser
lens
color
filter
pinhole
f = 50 mm
mirror

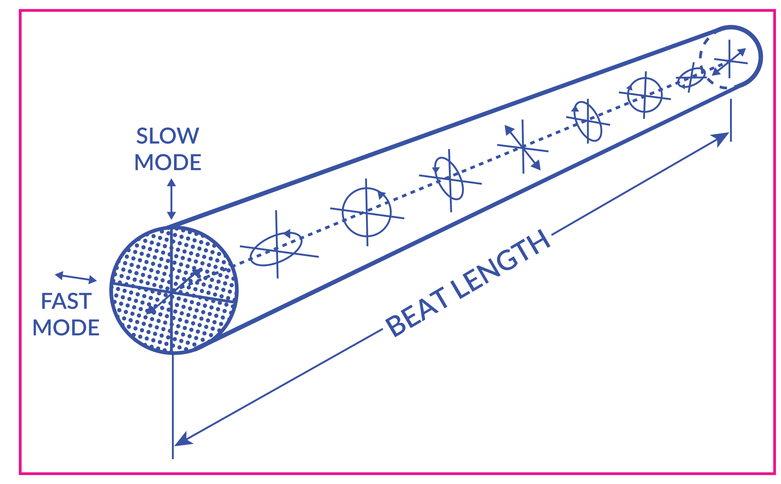
SLOW
MODE
FAST
MODE
BEAT LENGTH

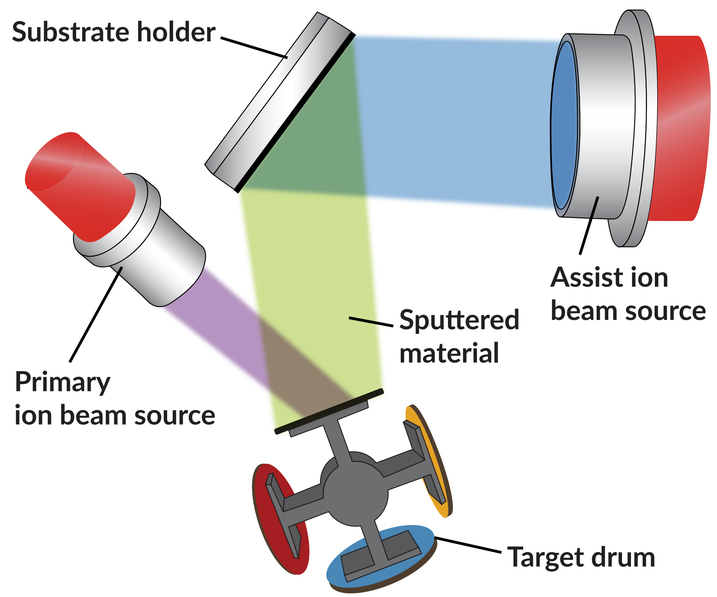

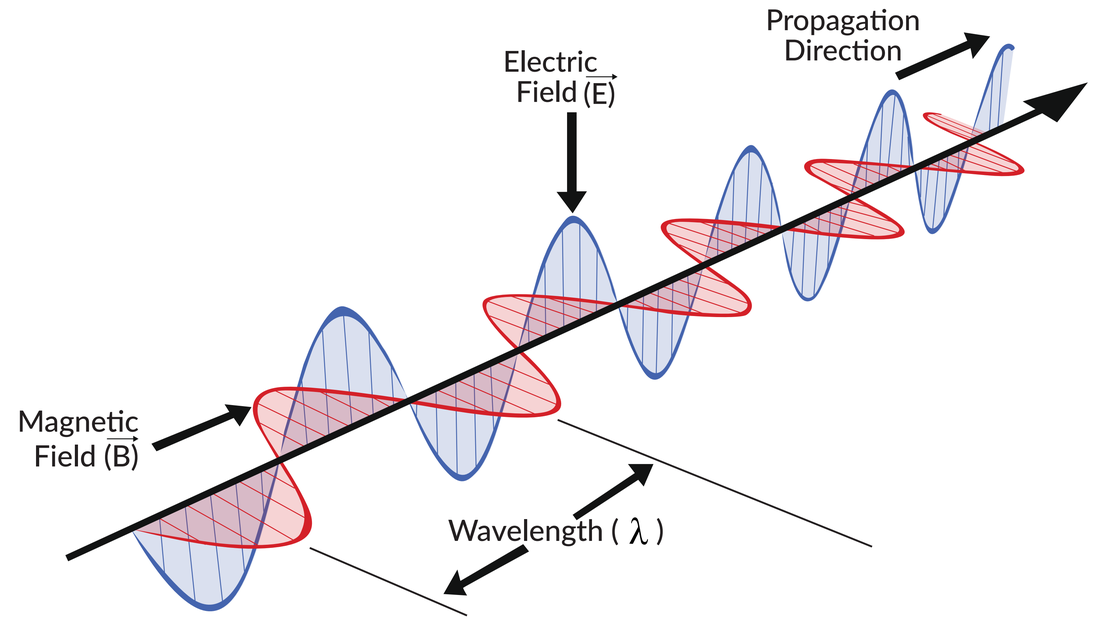

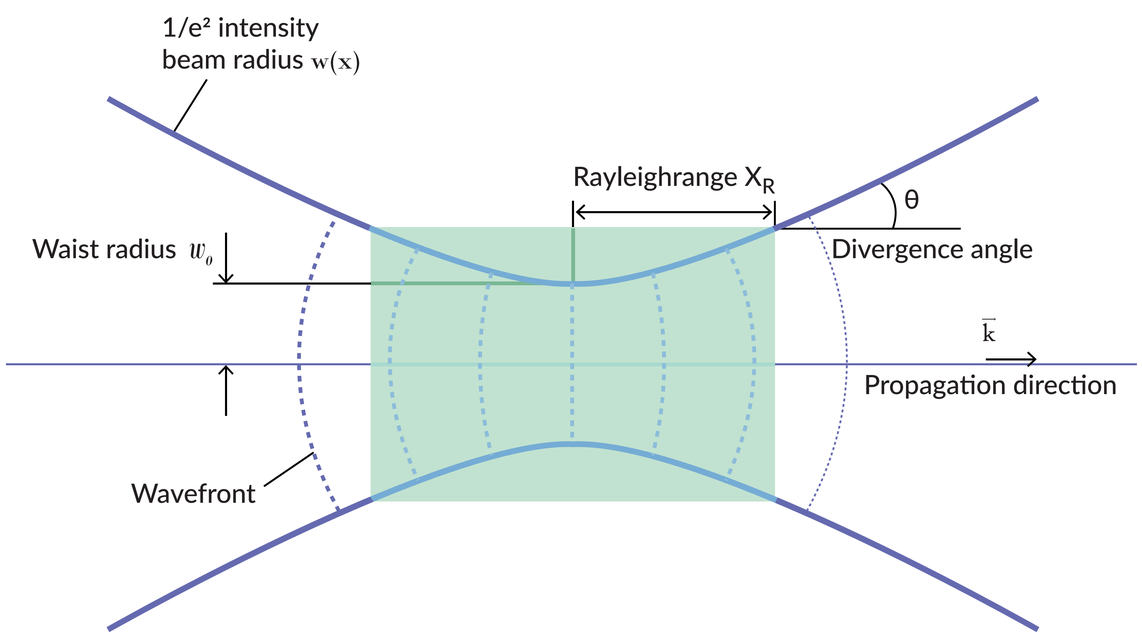

Desinition of the paraxial Gaussion beam.

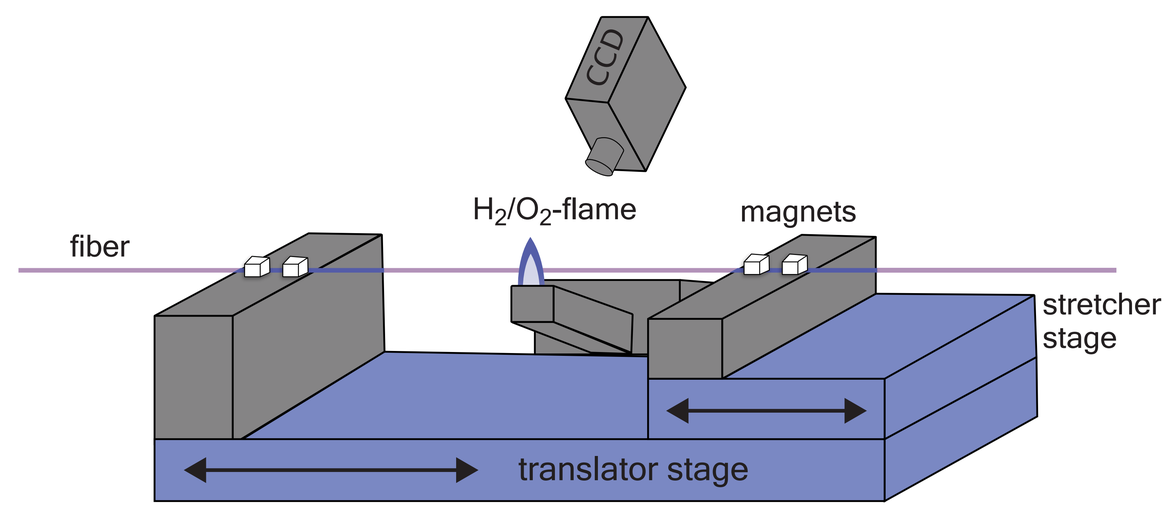

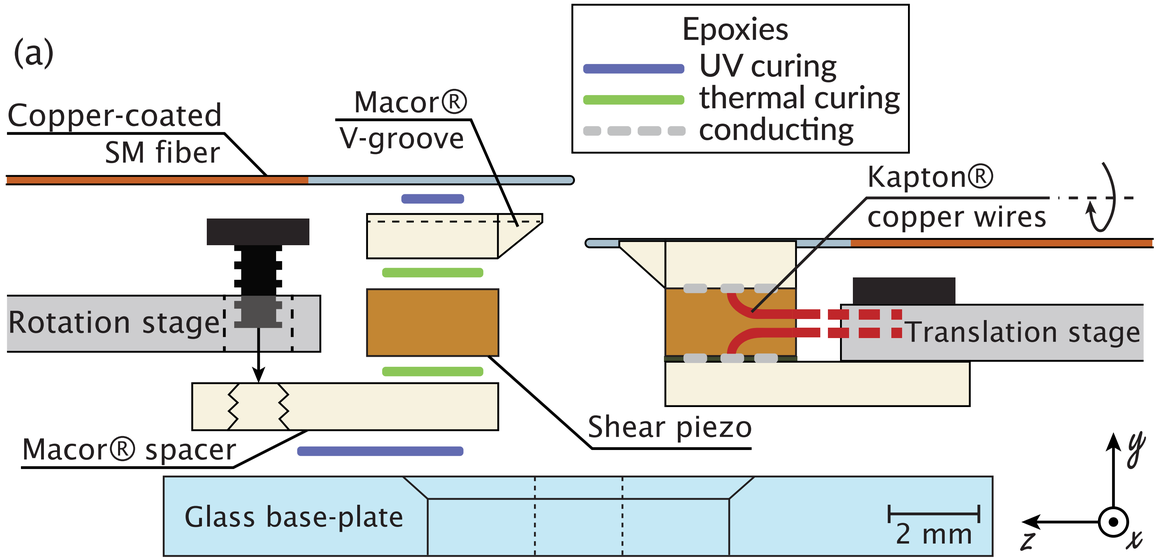
(a)
Epoxies
UV curing
thermal curing
conducting
Copper-coated
SM fiber
Macor®
V-groove
Kapton®
copper wires
Rotation stage
Translation stage
Shear piezo
Macor® spacer
Glass base-plate
2 mm
y
z
x

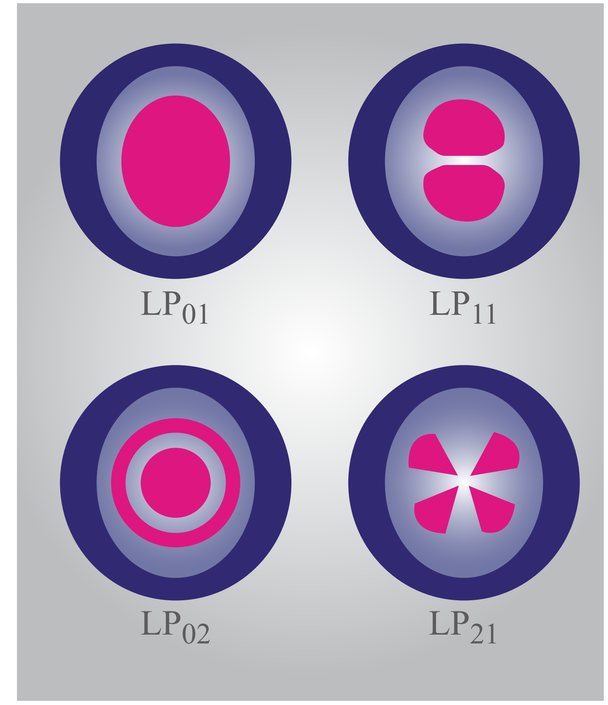
LP01
LP11
LP02
LP21

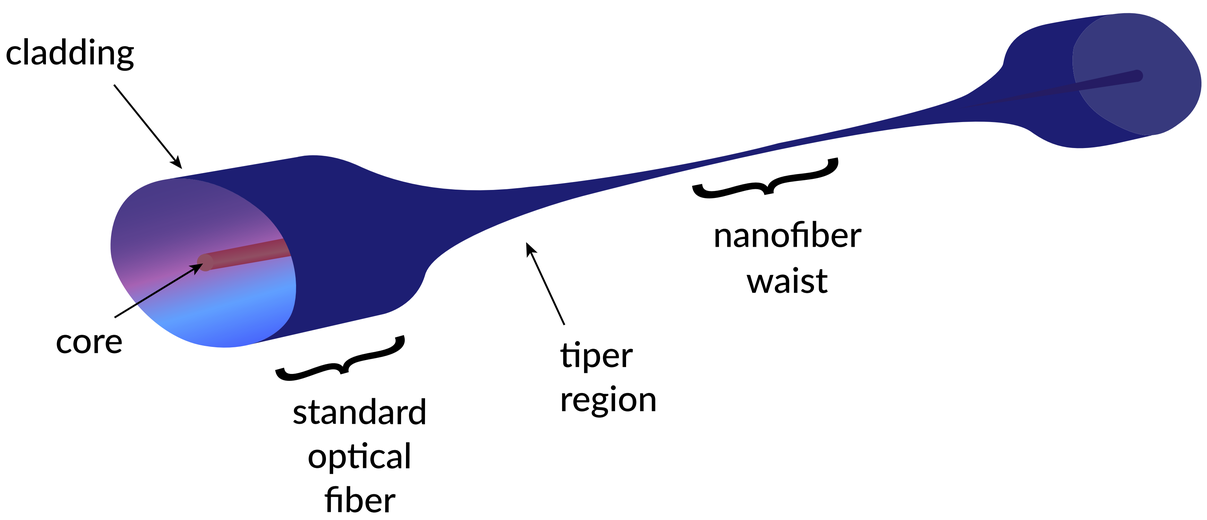
cladding
core
standard
optical
fiber
tiper
region
nanofiber
waist

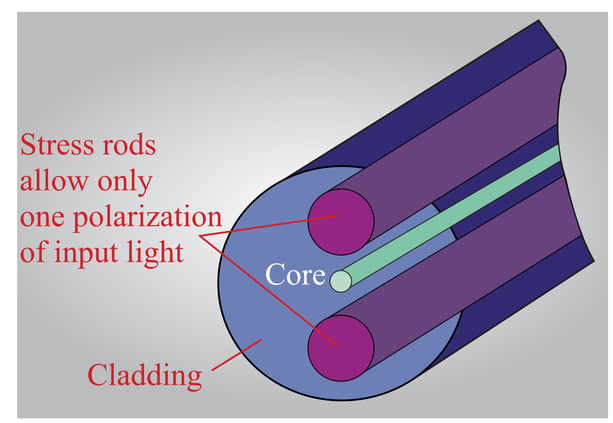
Stress rods
allow only
one polarization
of input light
Core
Cladding

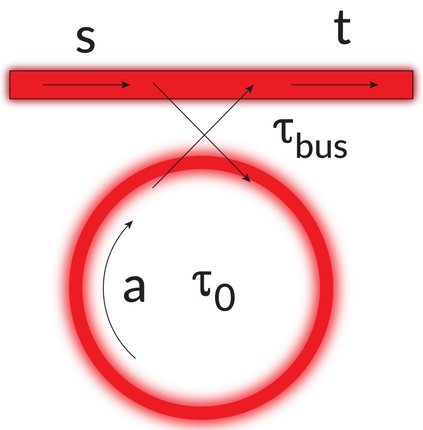
s
t
τ_{bus}
a
τ_0

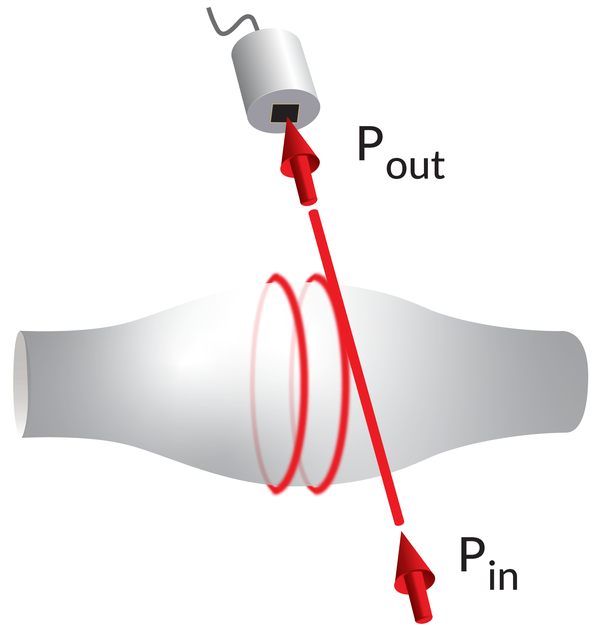
P_{out}
P_{in}

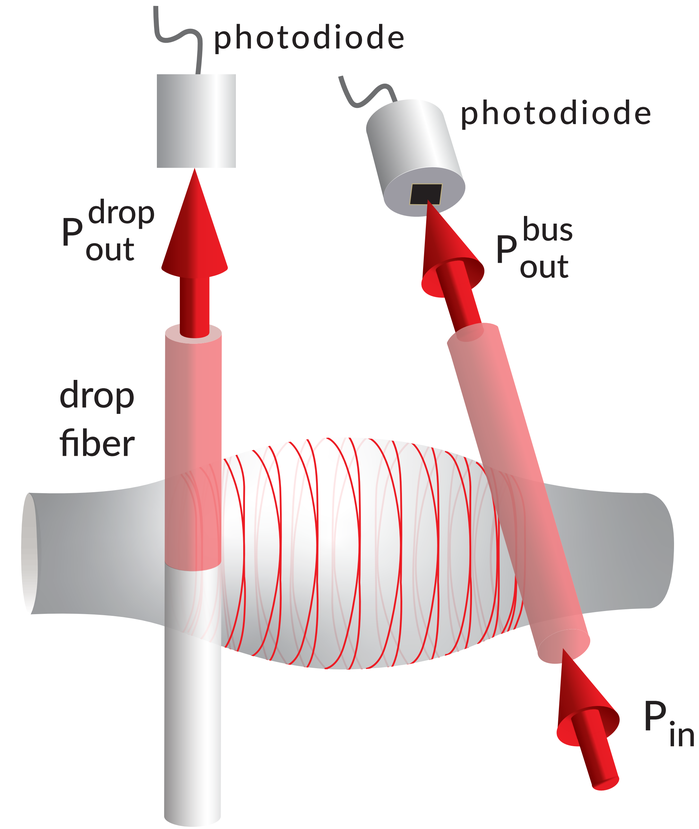
photodiode
photodiode
P_{out}^{drop}
P_{out}^{bus}
drop
fiber
P_{in}

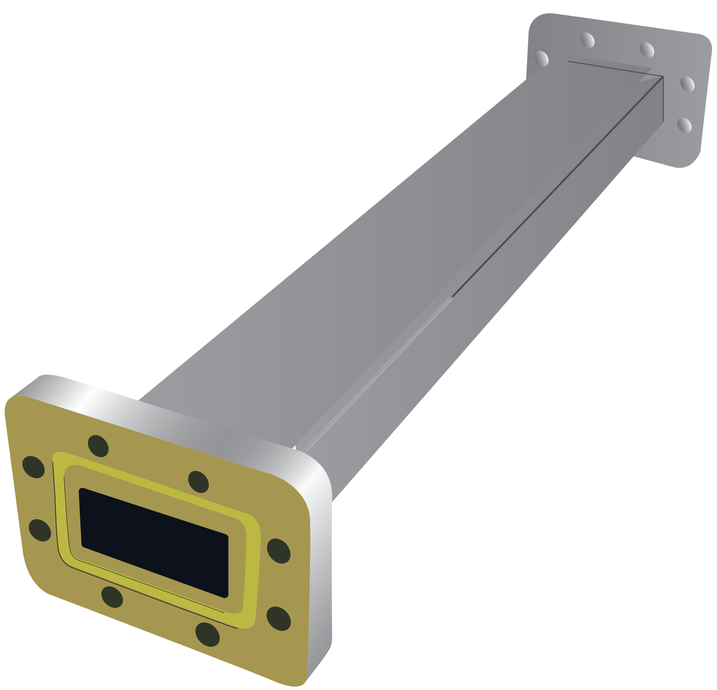

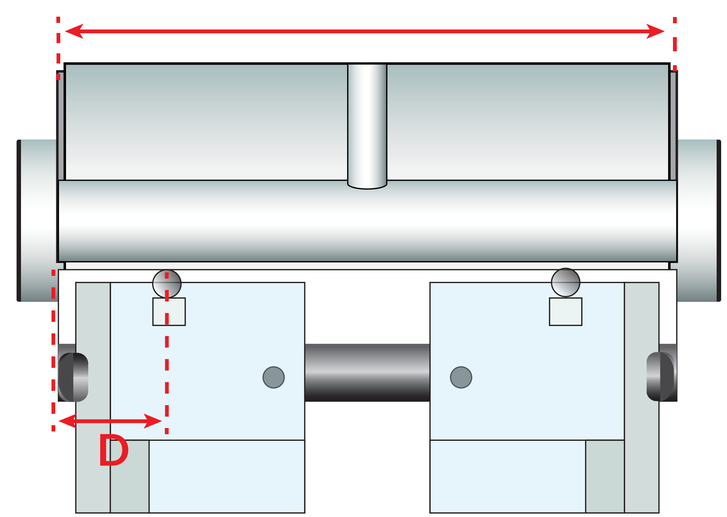
D

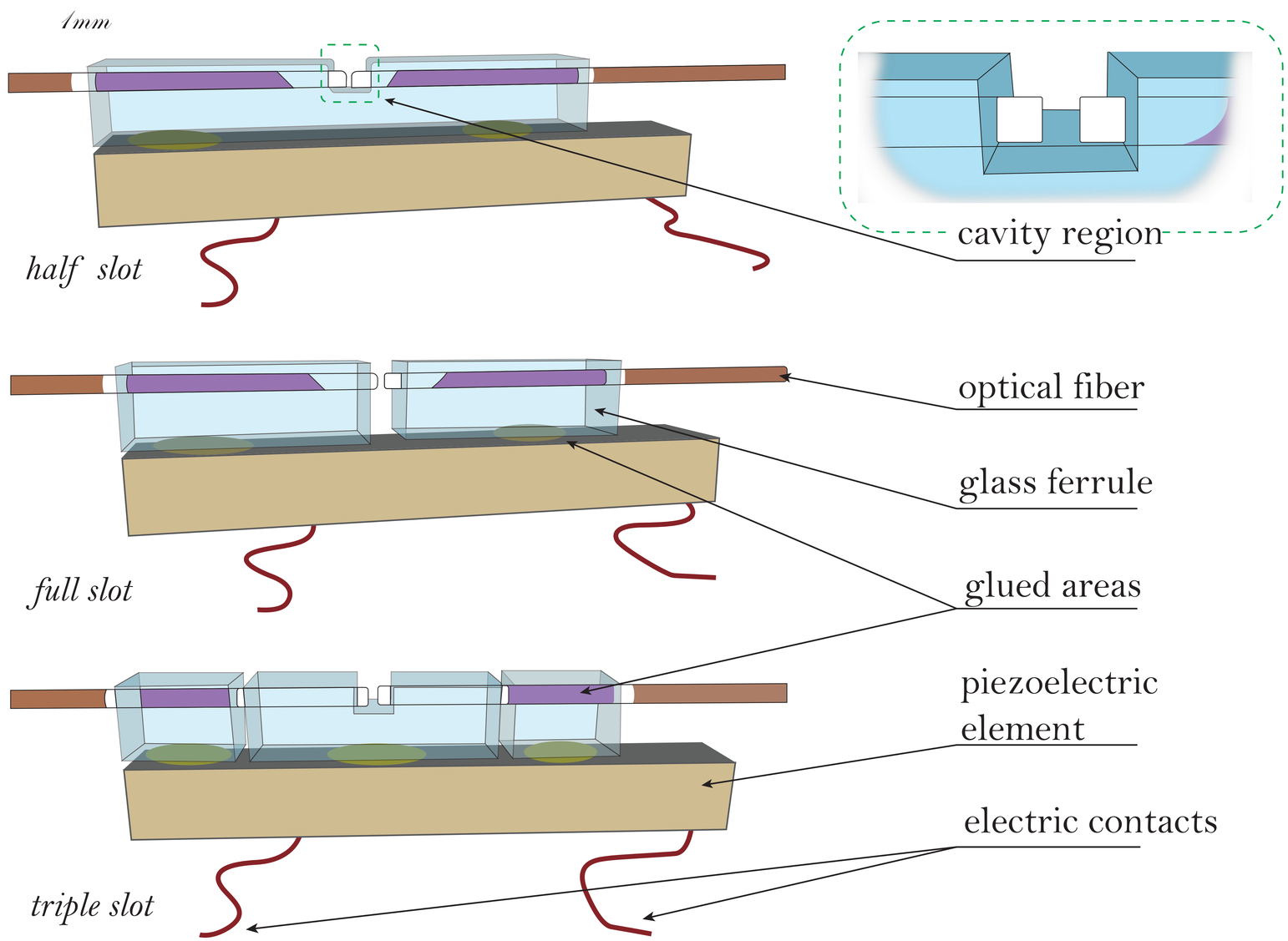
1mm
half slot
cavity region
optical fiber
glass ferrule
full slot
glued areas
piezoelectric element
electric contacts
triple slot