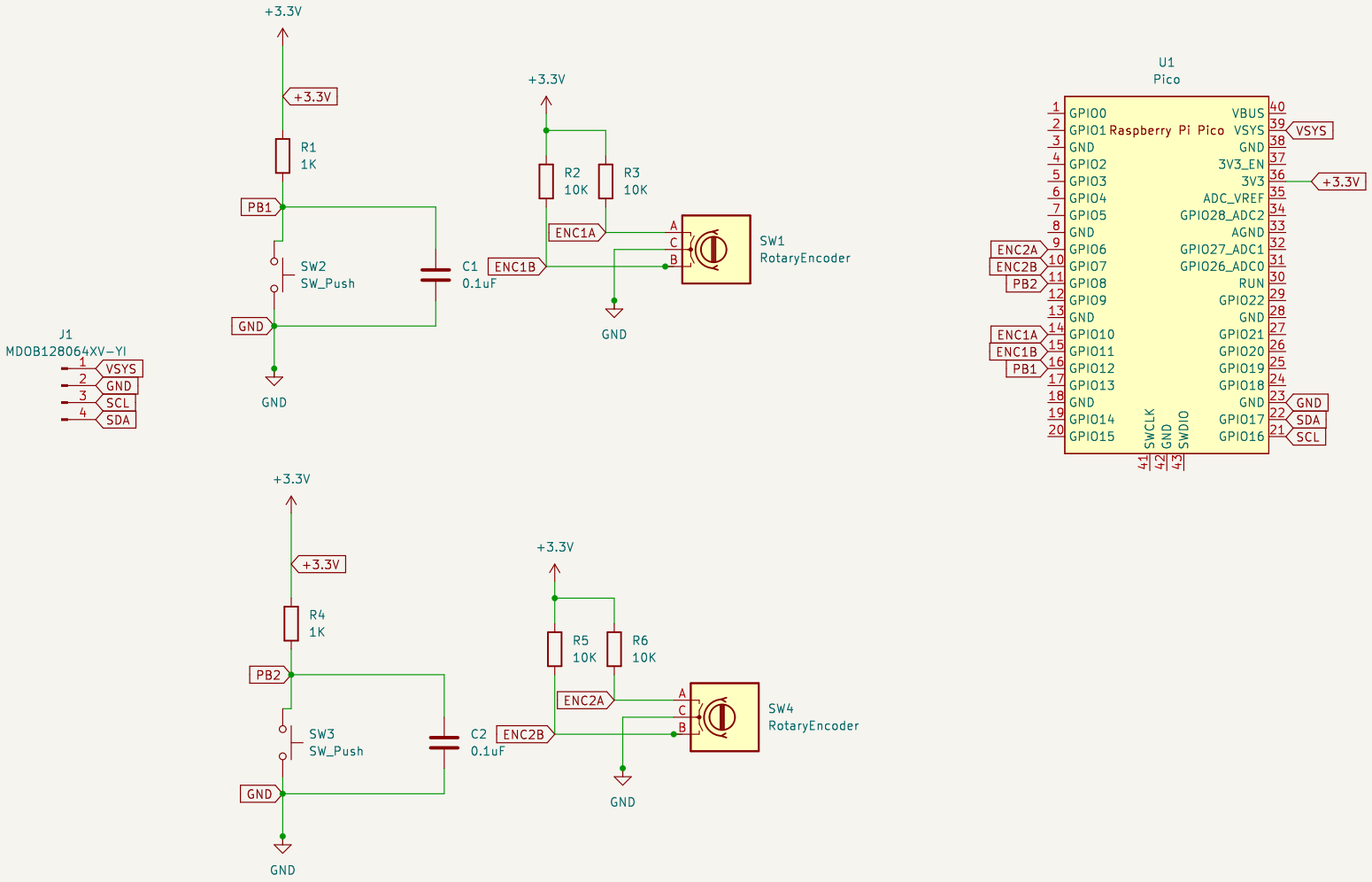

Yan-Robot OLED ENCODER

Sheet: /
File: yan_circuit.kicad_sch

Title:

Size: A4	Date:	**Rev:**
KiCad E.D.A. kicad 7.0.9		Id: 1/1