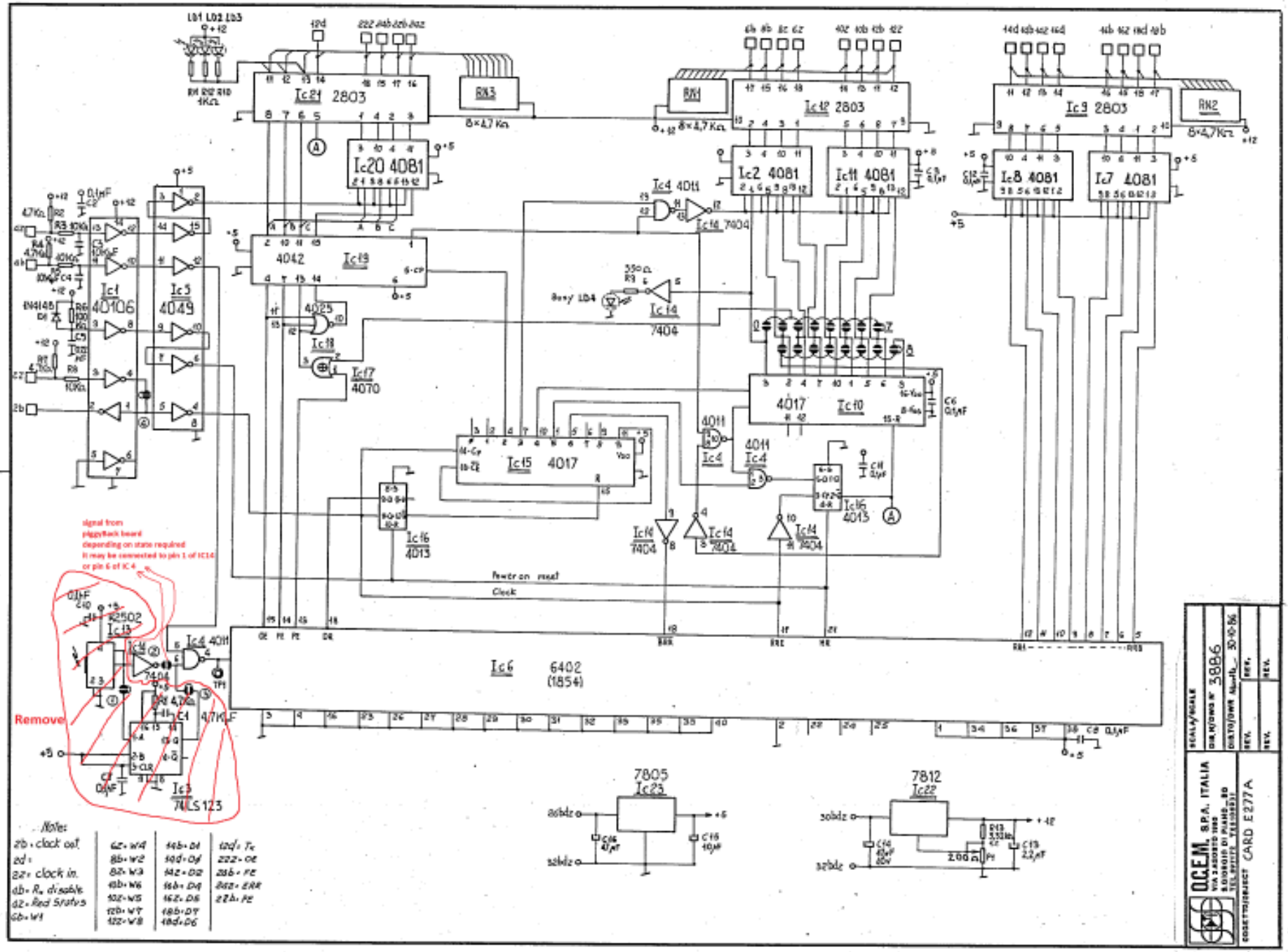
Ic21 2803
Ic20 4081
RN3
8×4,7 KΩ
RN1
Ic12 2803
Ic2 4081
Ic11 4081
Ic9 2803
RN2
Ic8 4081
Ic7 4081
Ic1 40106
Ic3 4049
Ic19 4042
Ic18 4025
Ic17 4070
Ic4 4011
Ic16 7404
Busy LD4
Ic14 7404
Ic10 4017
Ic15 4017
Ic16 4013
Power on reset
Clock
Ic6 6402 (1854)
Ic13 82S02
Ic3 74LS123
Remove
signal from piggyback board depending on state required it may be connected to pin 1 of IC14 or pin 6 of IC4
Ic23 7805
Ic22 7812
O.C.E.M. S.P.A. ITALIA
CARD E277A