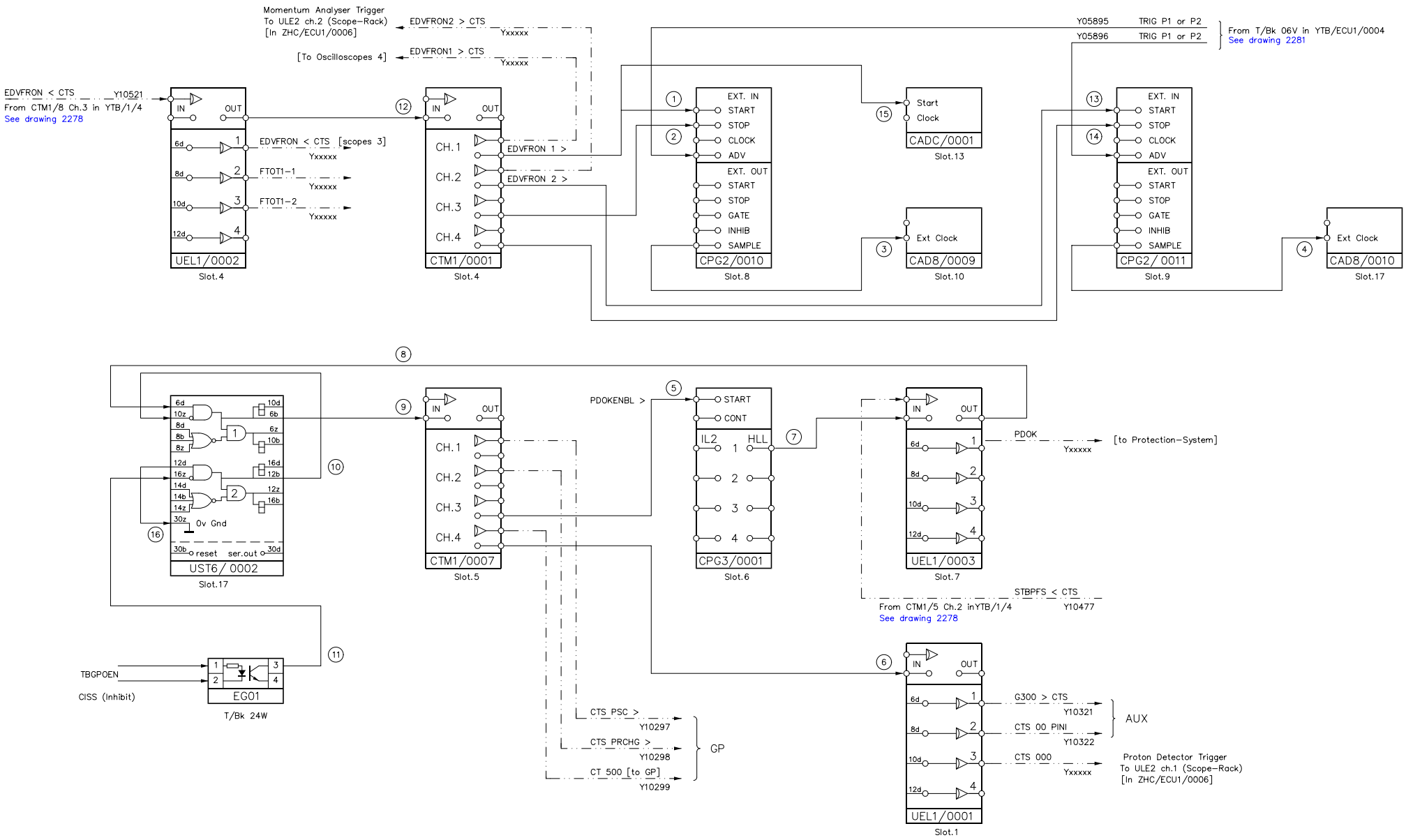

Notes:

1: This drawing must be used in conjunction with its own Cable-schedule

Title	Timing and logic diagram		
Current issue	J	Enclosure	YTB/ECU1/0003
Issue date	15/04/13		
CODAS & IT	Y2	WSD3	2277.