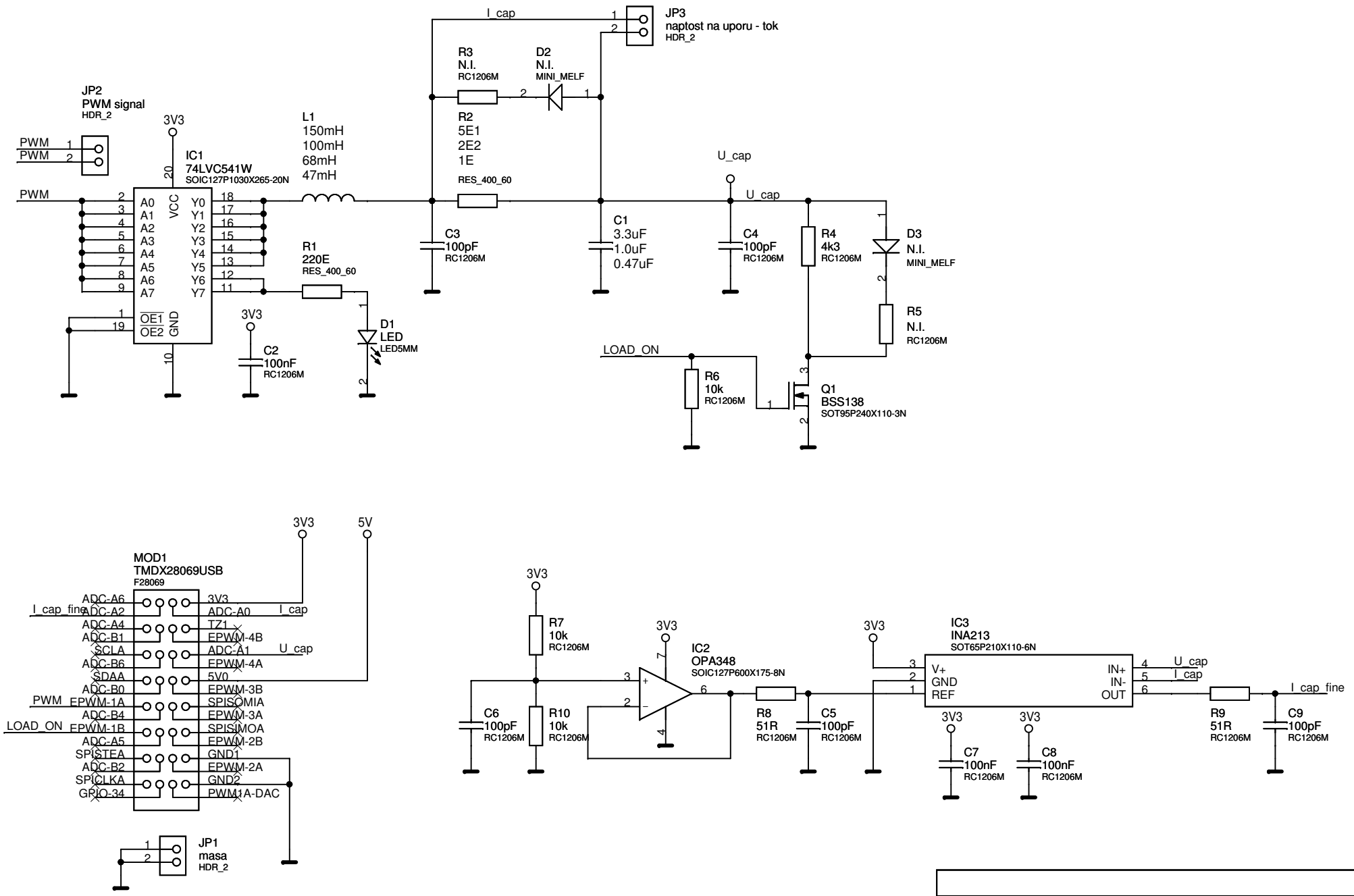

Title	Piccolo RLC	
Size A4	Document Number Piccolo RLC	Rev 2
Date: Tuesday, October 28, 2014	Sheet 1 of 1	