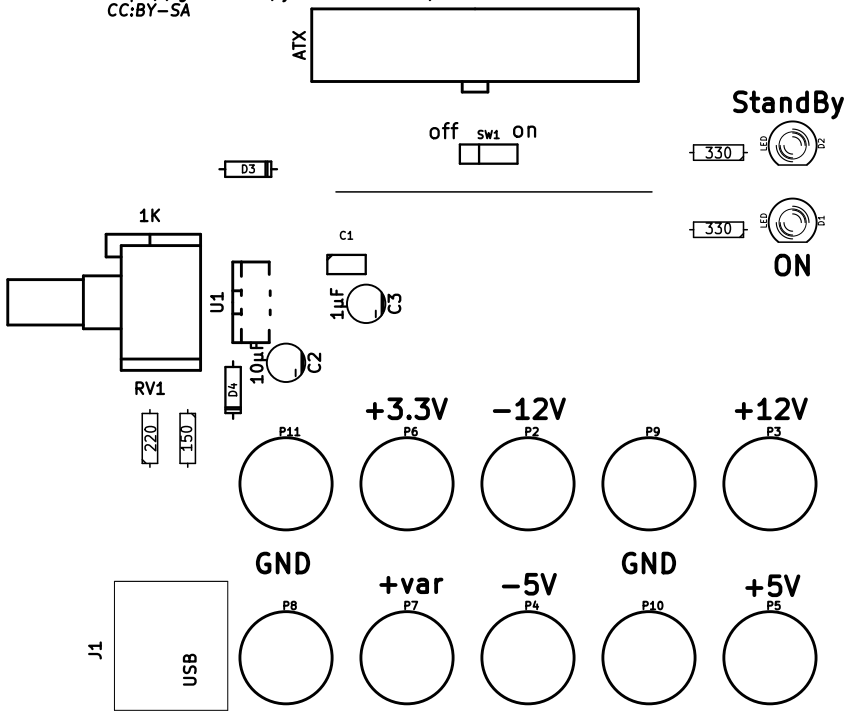https://github.com/jerome-labidurie/vatx
CC:BY-SA