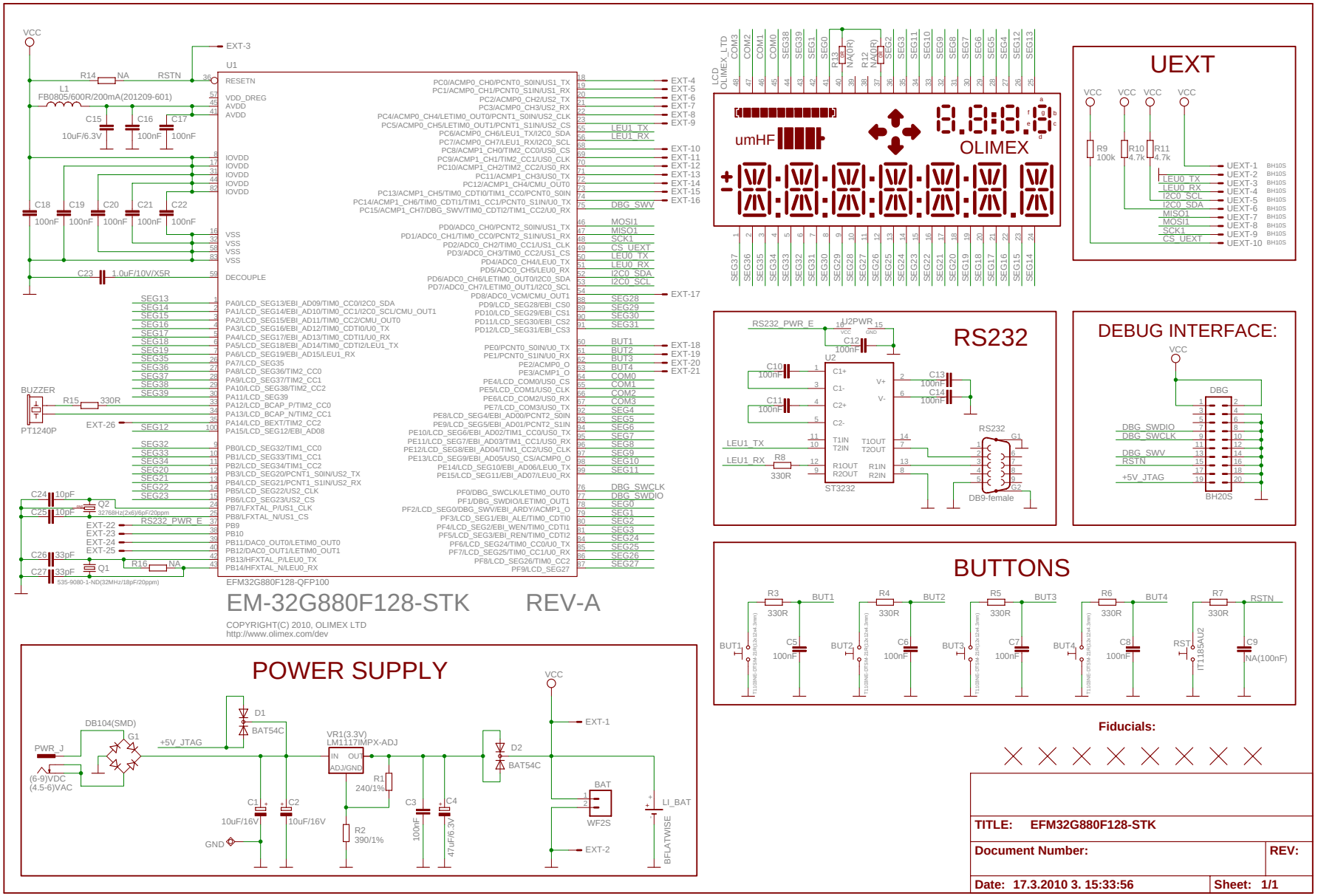
EM-32G880F128-STK
REV-A
COPYRIGHT(C) 2010, OLIMEX LTD
http://www.olimex.com/dev
EFM32G880F128-QFP100
POWER SUPPLY
RS232
UEXT
DEBUG INTERFACE:
BUTTONS
Fiducials:
TITLE: EFM32G880F128-STK
Document Number:
REV:
Date: 17.3.2010 3. 15:33:56
Sheet: 1/1