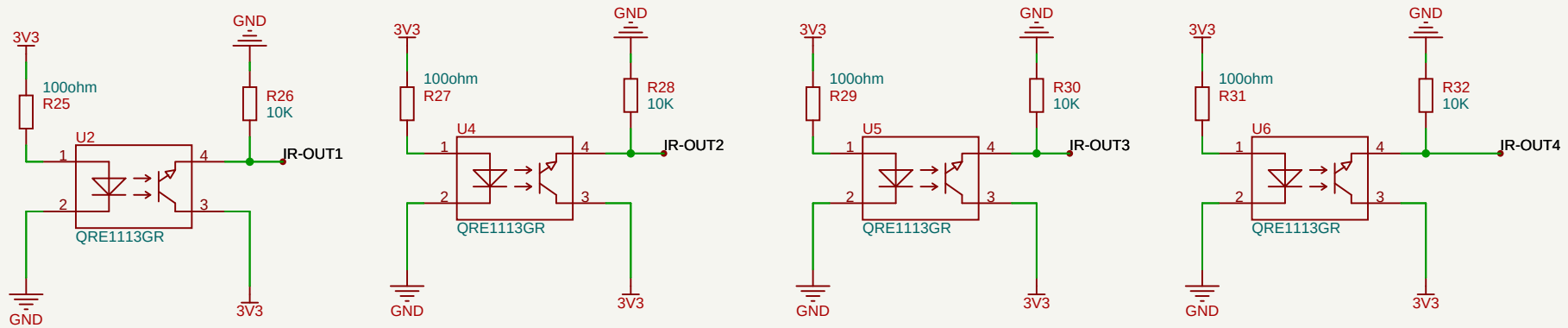
3V3
100ohm
R25
GND
R26
10K
U2
IR-OUT1
QRE1113GR
GND
3V3
3V3
100ohm
R27
GND
R28
10K
U4
IR-OUT2
QRE1113GR
GND
3V3
3V3
100ohm
R29
GND
R30
10K
U5
IR-OUT3
QRE1113GR
GND
3V3
3V3
100ohm
R31
GND
R32
10K
U6
IR-OUT4
QRE1113GR
GND
3V3

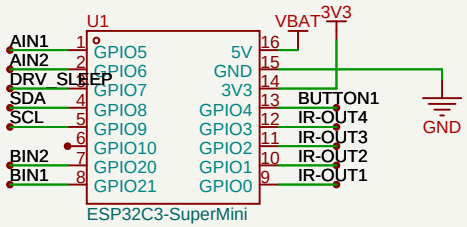
U1
VBAT
3V3
AIN1
AIN2
DRV_SLEEP
SDA
SCL
BIN2
BIN1
GPIO5
GPIO6
GPIO7
GPIO8
GPIO9
GPIO10
GPIO20
GPIO21
5V
GND
3V3
GPIO4
GPIO3
GPIO2
GPIO1
GPIO0
BUTTON1
IR-OUT4
IR-OUT3
IR-OUT2
IR-OUT1
GND
ESP32C3-SuperMini

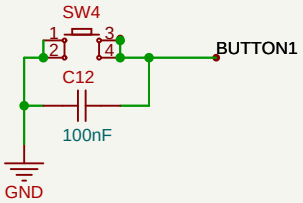
SW4
BUTTON1
C12
100nF
GND

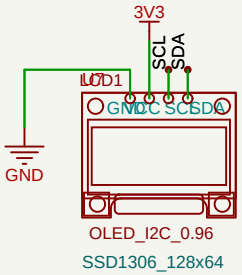
3V3
SCL
SDA
LCD1
GND
VCC
SCL
SDA
GND
OLED_I2C_0.96
SSD1306_128x64

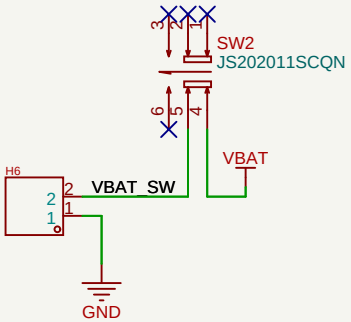
SW2
JS202011SCQN
VBAT
H6
VBAT_SW
GND

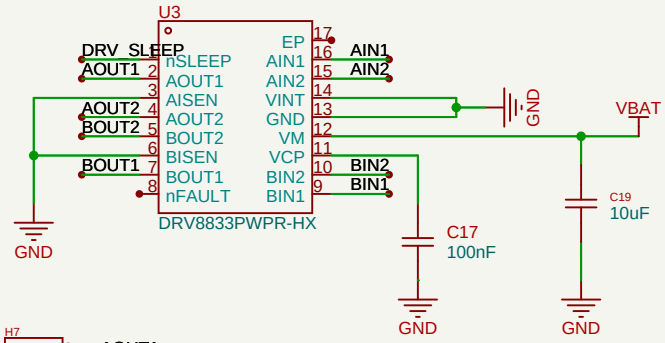
U3
DRV_SLEEP
AOUT1
AOUT2
BOUT2
BOUT1
nSLEEP
AOUT1
AISEN
AOUT2
BOUT2
BISEN
BOUT1
nFAULT
EP
AIN1
AIN2
VINT
GND
VM
VCP
BIN2
BIN1
AIN1
AIN2
BIN2
BIN1
DRV8833PWPR-HX
GND
GND
VBAT
C17
100nF
C19
10uF
GND
GND

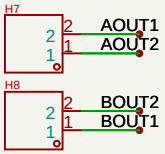
H7
AOUT1
AOUT2
H8
BOUT2
BOUT1

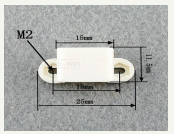

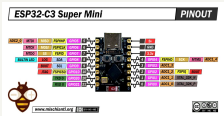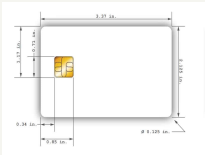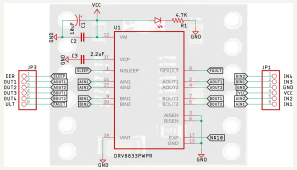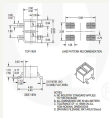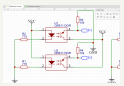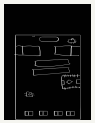
ESP32-C3 Super Mini
PINOUT