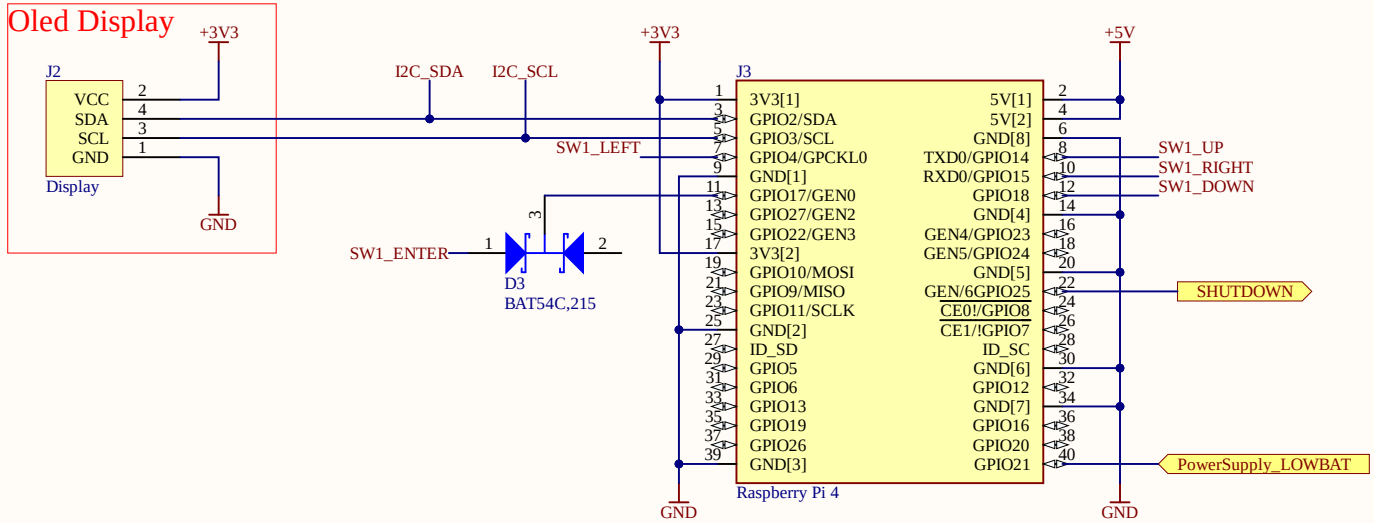

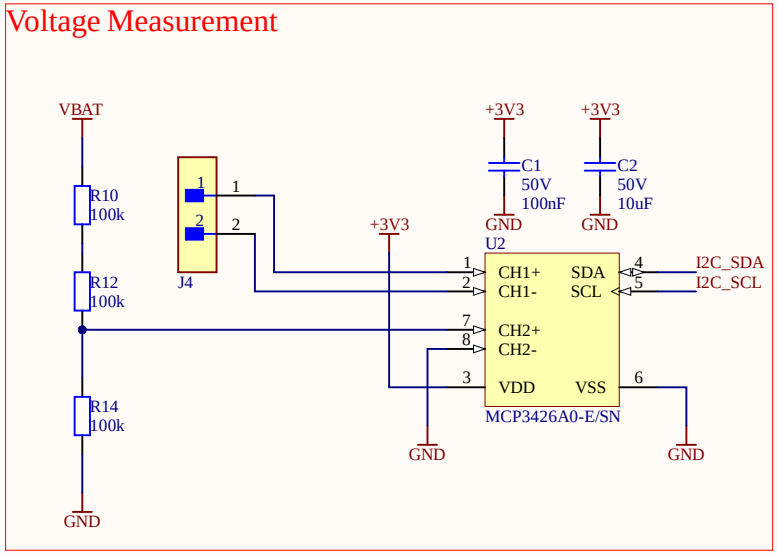

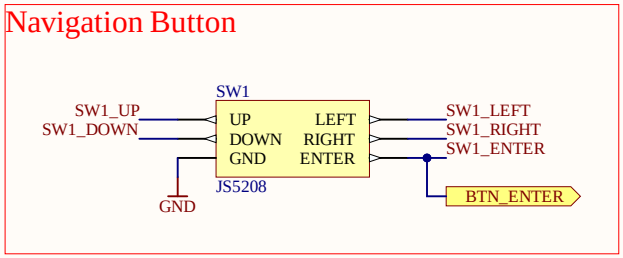

Title		
Size A	Number	Revision
Date: 2.14.2021		Sheet of
File: C:\Users\..\main.SchDoc		Drawn By: