Foundations of High Performance Computing

Lecture 2: HPC hardware&software

"High Performance Computing"

2022-2023 Stefano Cozzini

Agenda

- HPC is parallel
- Serial Computers
- Moore law/Dennard Scaling
- Parallel computers
- HPC infrastructure
- ORFEO HPC infrastructure

HPC

=

PARALLEL COMPUTING

HPC

=

PARALLEL

COMPUTERS

Agenda

- Why HPC is parallel ? ✓
- Serial Computers
- Moore law/Dennard Scaling
- Parallel computers
- HPC infrastructure
- ORFEO HPC infrastructure

What is a serial computer ?

- Von Neumann architecture (the fundamental model)

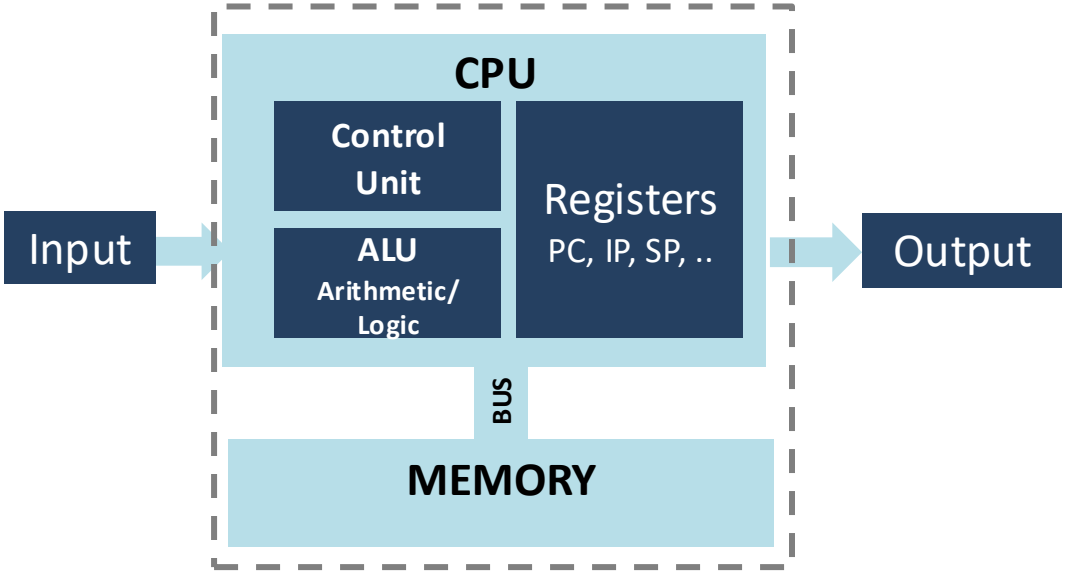

Von Neumann architecture:

- There is only one process unit (CPU)
  - Control Unit: processes instructions
  - ALU: math and logic operations
  - Register: store data

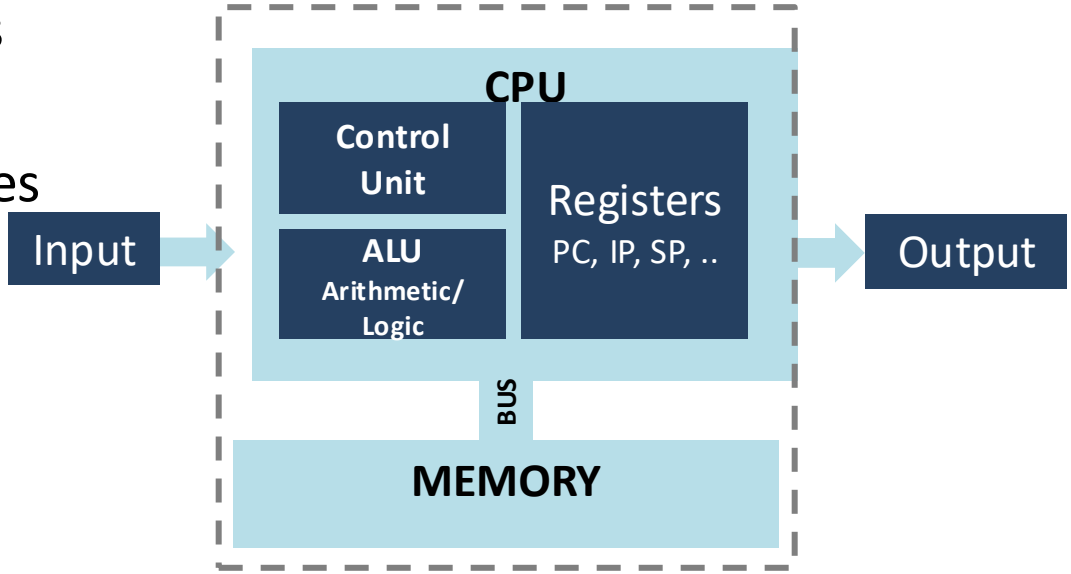

Von Neumann architecture:

- 1 instructions is executed at a time
- memory is “flat”:
  - access on any location has always the same cost
  - access to memory has the same cost than op execution

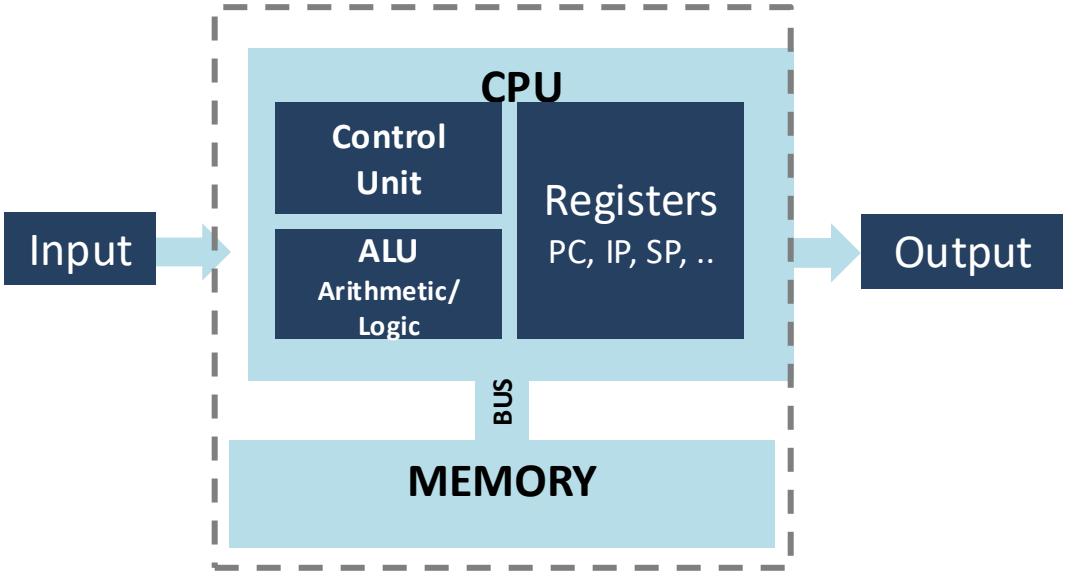

Von Neumann architecture:

5 step WORKFLOW:

1. instruction fetch
2. Instruction decode: determine operation and operands
3. Memory fetch: Get operands from memory
4. Perform operation
5. Write results back

Continue with next instruction

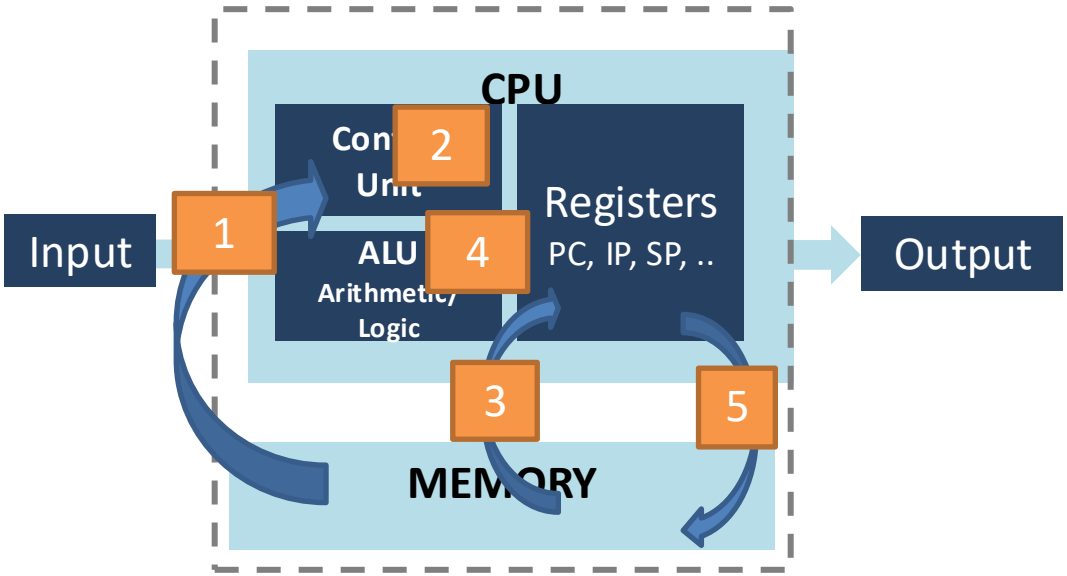

Instruction set architecture (ISA)

- The deeper level accessible to the programmers
- It is the boundary between SW and HW
- The interface between the programmer and the microarchitecture
- Different microarchitectures can have the same ISA (binary Compatible)
- Different generation of microarchitectures can be backward compatible
- For us: x86 instruction set

A very simple operation..

```
void store(double *a, double *b, double *c) {
 *c = *a + *b;
}
```

```
[exact@master ~]$ gcc -O2 -S -o - frammento.c
.file   "frammento.c"
.text
.p2align 4,,15
.globl store
.type       store, @function
store:
.LFB0:
.cfi_startproc
movsd      (%rdi), %xmm0   #load *a to mmx0
addsd      (%rsi), %xmm0   # load b and add to *a
movsd      %xmm0, (%rdx)  # store to C
ret
.cfi_endproc
.LFE0:
.size store, .-store
.ident      "GCC: (GNU) 4.4.7 20120313 (Red Hat 4.4.7-4)"
.section    .note.GNU-stack,"",@progbits
```

Agenda

- Why HPC is parallel ? ✓
- Serial Computers ✓
- Moore law/Dennard Scaling
- Parallel computers
- HPC infrastructure
- ORFEO HPC infrastructure

Moore Law

- Typically stated as: “Performance doubles every X months”
- Actually, closer to: “Number of transistors per unit cost doubles every X months”

The original Moore Law

The complexity for minimum component costs has increased at a rate of roughly a factor of two per year. [...]

Over the longer term, the rate of increase is a bit more uncertain, although there is no reason to believe it will not remain nearly constant for at least 10 years.

-- Gordon Moore, Electronics, 1965

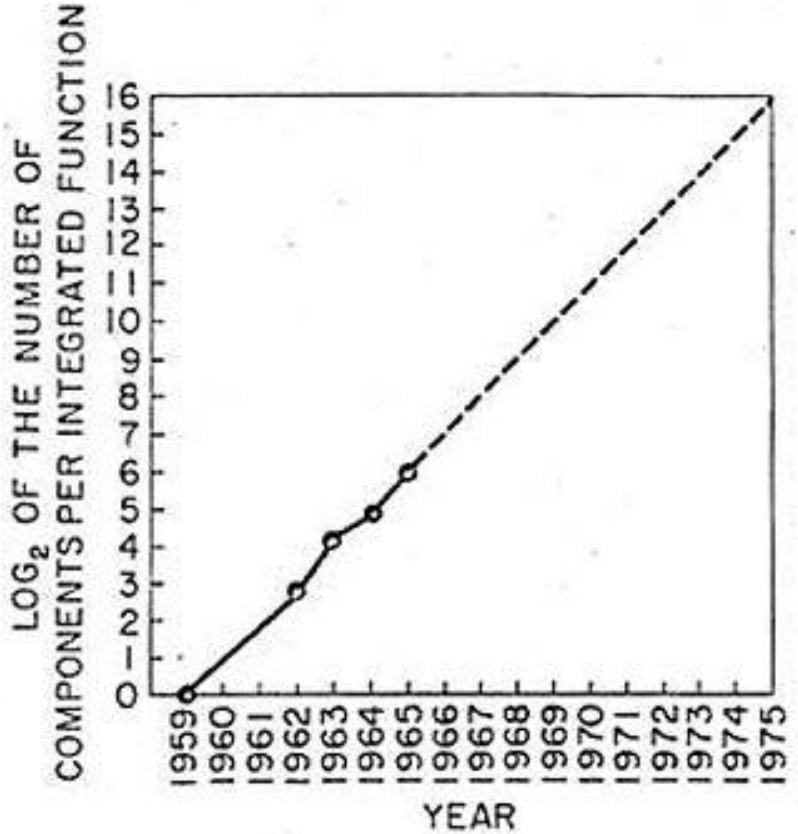

Fig. 2 Number of components per integrated function for minimum cost per component extrapolated vs time.

Why is Moore's Law connected with processor performance?

Dennard Scaling: From Moore's Law to performance

- *"Power density stays constant as transistors get smaller"*

  Robert H. Dennard, 1974

- Intuitively:

  Smaller transistors → shorter propagation delay →faster frequency

  Smaller transistors → smaller capacitance → lower voltage

  $$Power \propto Capacitance \times Voltage^2 \times Frequency$$

Moore's law → Faster performance @ Constant power!

Single-core performance scaling

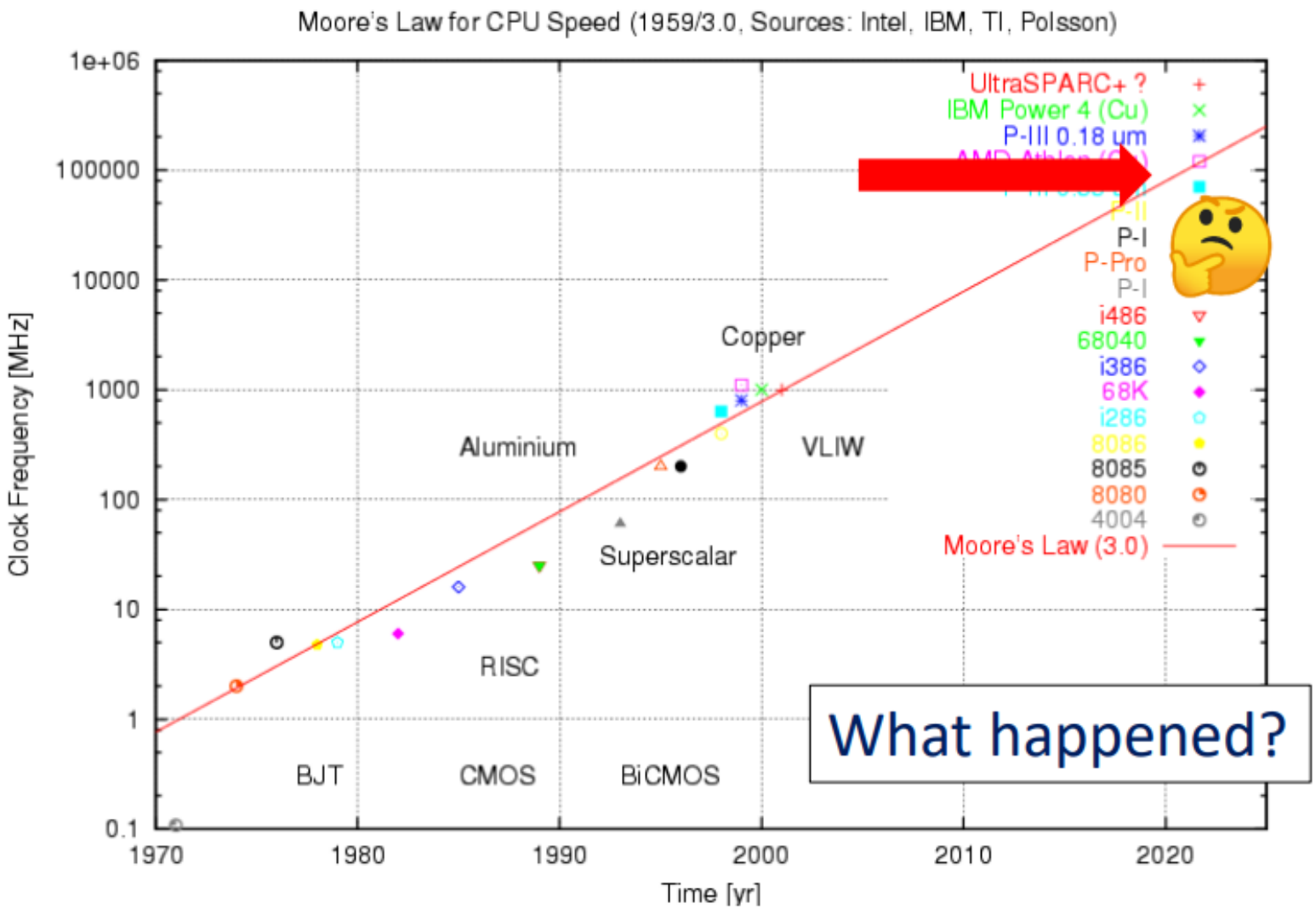

End of Dennard Scaling

- Even with smaller transistors, we cannot continue reducing power..

And now ?

- 2 options:
  - Increase power (when increase frequency)
  - Stop frequency scaling…

(original) Moore law still valid…

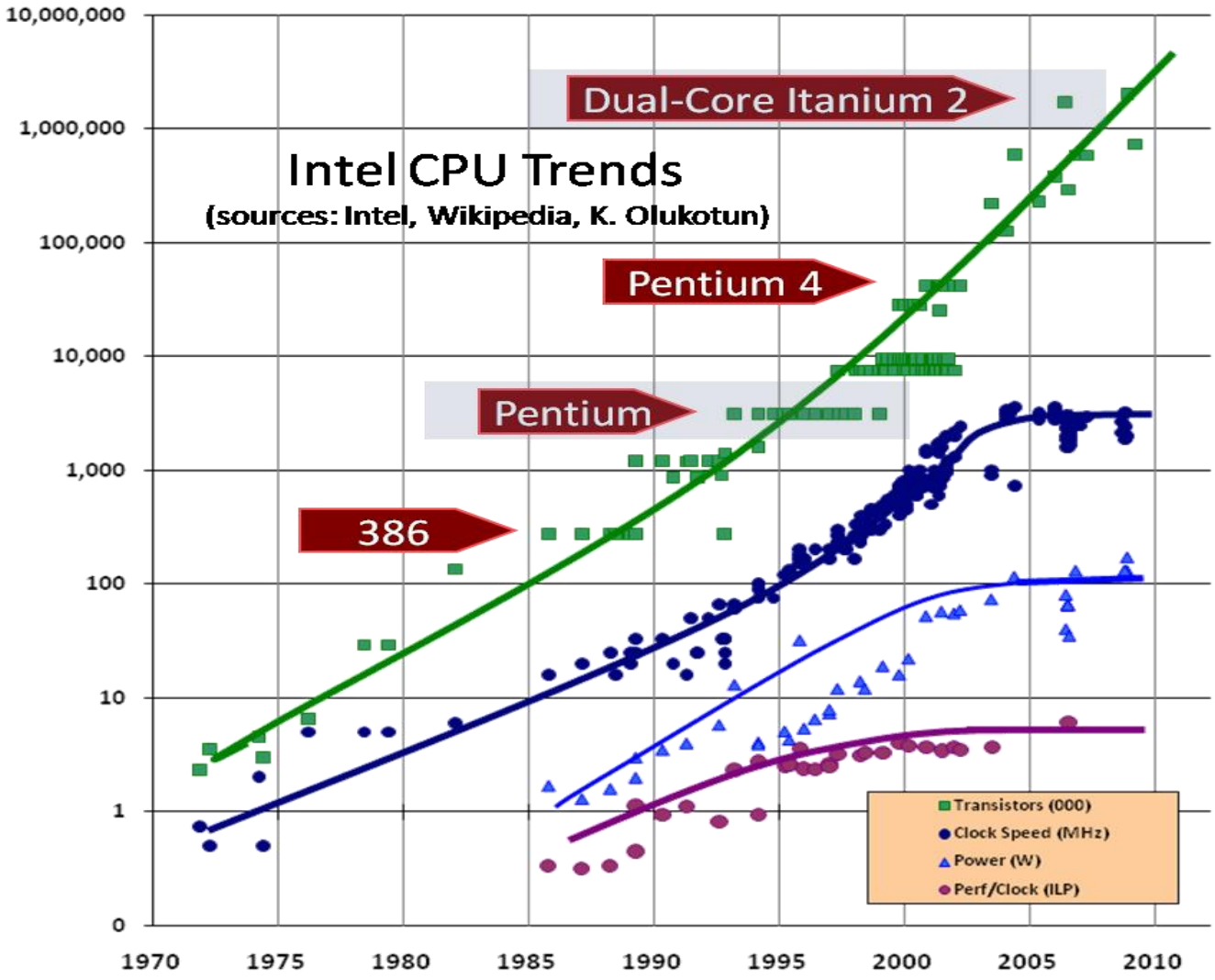

CPU are multicore processor

- Because of power, heat dissipation, creasing tendency to actually lower clock frequency but pack more computing cores onto a chip.
- These cores will share some resources, e.g. memory, network, disk, etc but are still capable of independent calculations

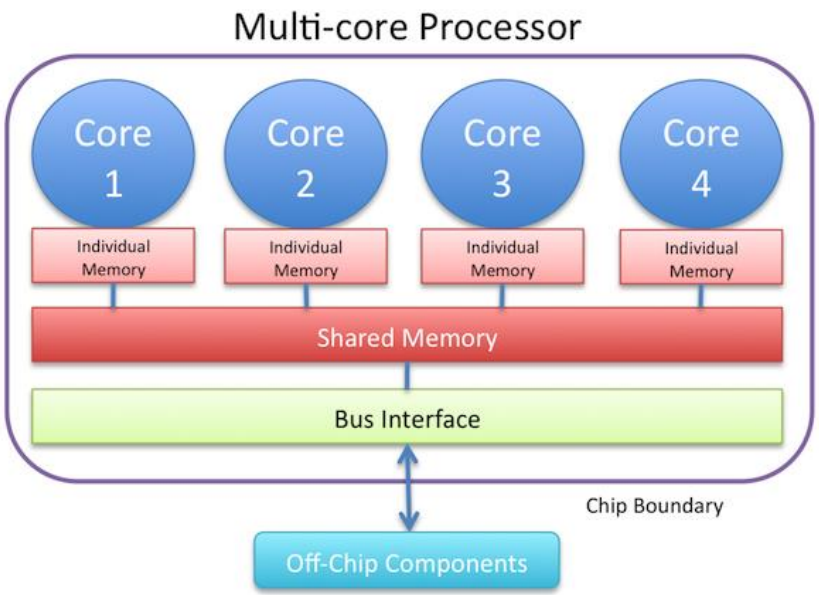

Agenda

- Why HPC is parallel ? ✓
- Serial Computers ✓
- Moore law/Dennard Scaling ✓
- Parallel computers
- HPC infrastructure
- ORFEO HPC infrastructure

PARALLELISM IS EVERYHERE

even in your laptop..

Parallel Computers

- Flynn Taxonomy (1966): may help us in classifying them:
  - Data Stream
  - Instruction Stream

Data stream	Instruction stream: Single	Instruction stream: Multiple
Single	SISD	MISD
Multiple	SIMD	MIMD

Comments

- Flynn taxonomy does not help too much nowadays with modern HPC infrastructure
  - CPU and computers are changed too much in the last 50 years
- However, SIMD and MIMD concepts are still used HPC hardware

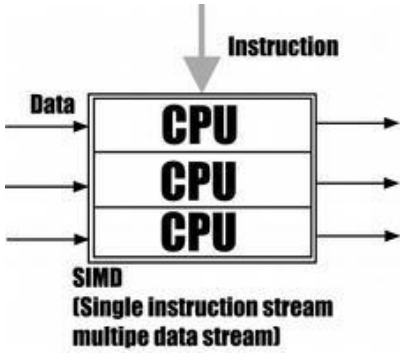

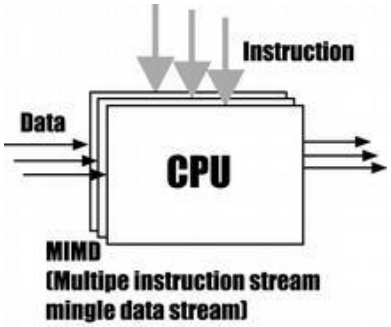

Comments (2)

	HW level	SW level
SISD	A Von Neumann CPU	no parallelism at all
MISD	On a superscalar CPU, different ports executing different *read* on the same data	• ILP os same data; • Multiple tasks or threads operating on the same data
SIMD	Any vector-capable hardware, the vector registers on a core, a GPU, a vector processor, an FPGA, ...	data parallelism through vector instructions and operations
MIMD	Every multi-core/processor system; on a superscalar CPUs, different ports executing different ops on different data	• ILP on different data; • Multiple tasks or threads executing different code on different data.

Essential component of a HPC cluster

- Several computers (nodes)
  - often in special cases (1U) for easy mounting in a rack
- One or more networks (interconnects) to hook the nodes together
- Some kind of storage
- A login/access node..

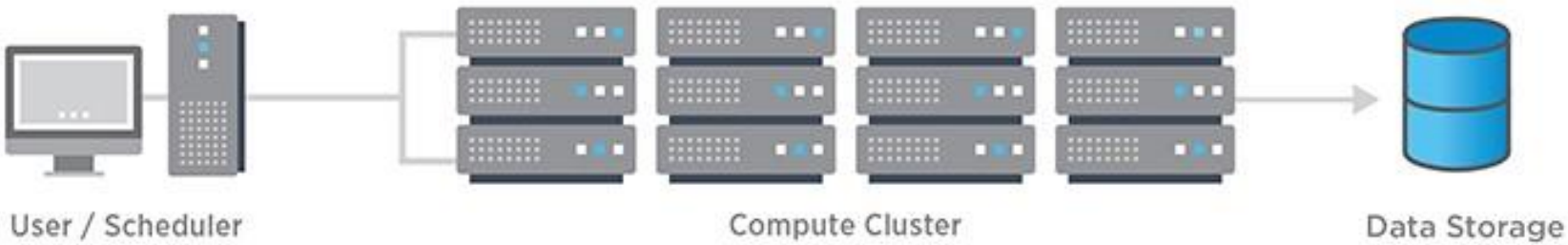

The hardware behind HPC

interconnected racks of connected nodes

single nodes

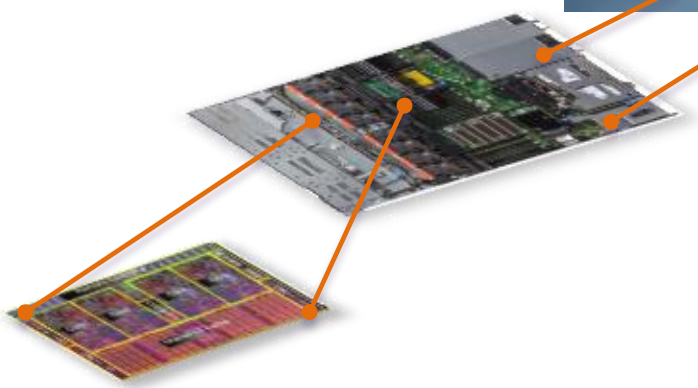

single cpu

Single CPU topology

Modern CPUS
are multi- (or many-) cores

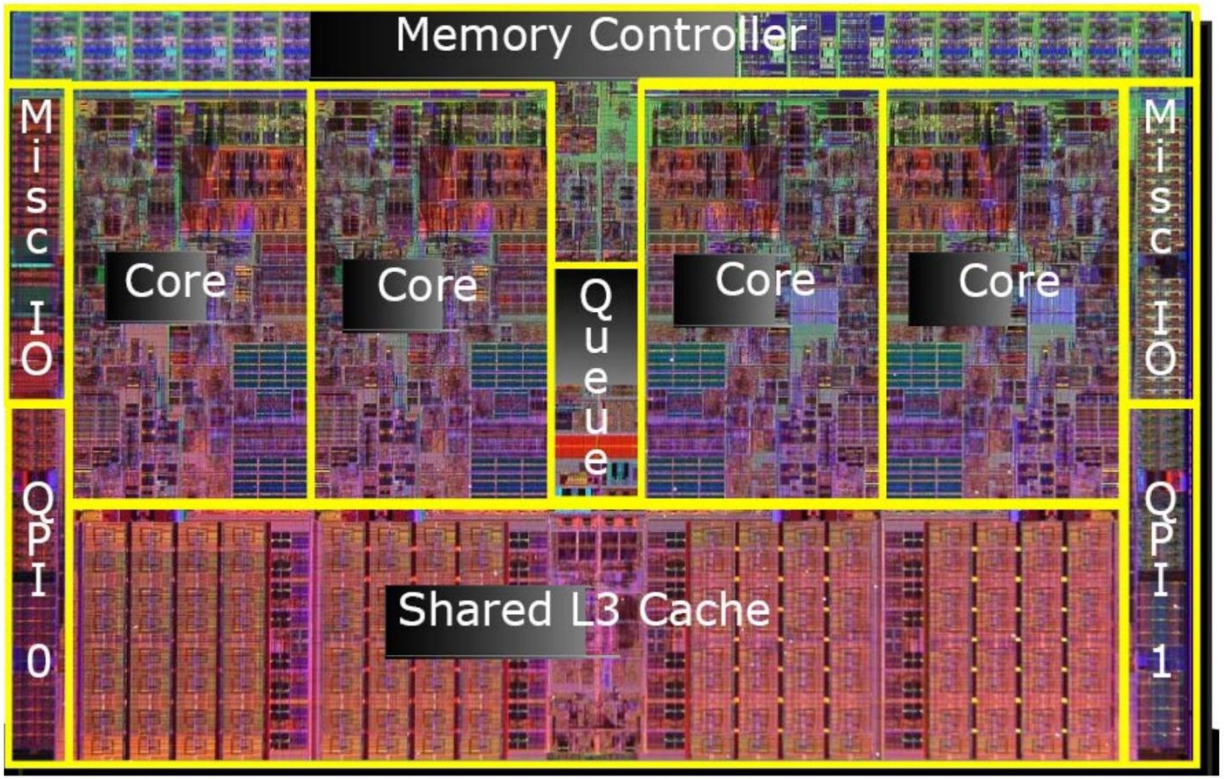

Core : definition

- A core is the smallest unit of computing, having one or more (hardware/software) threads and is responsible for executing instructions.

Single CPU topology

- Cache hierarch can have different topologies

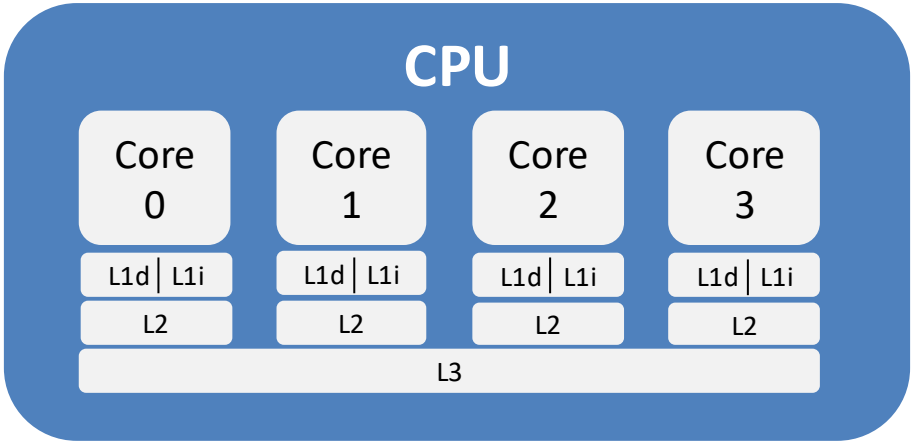

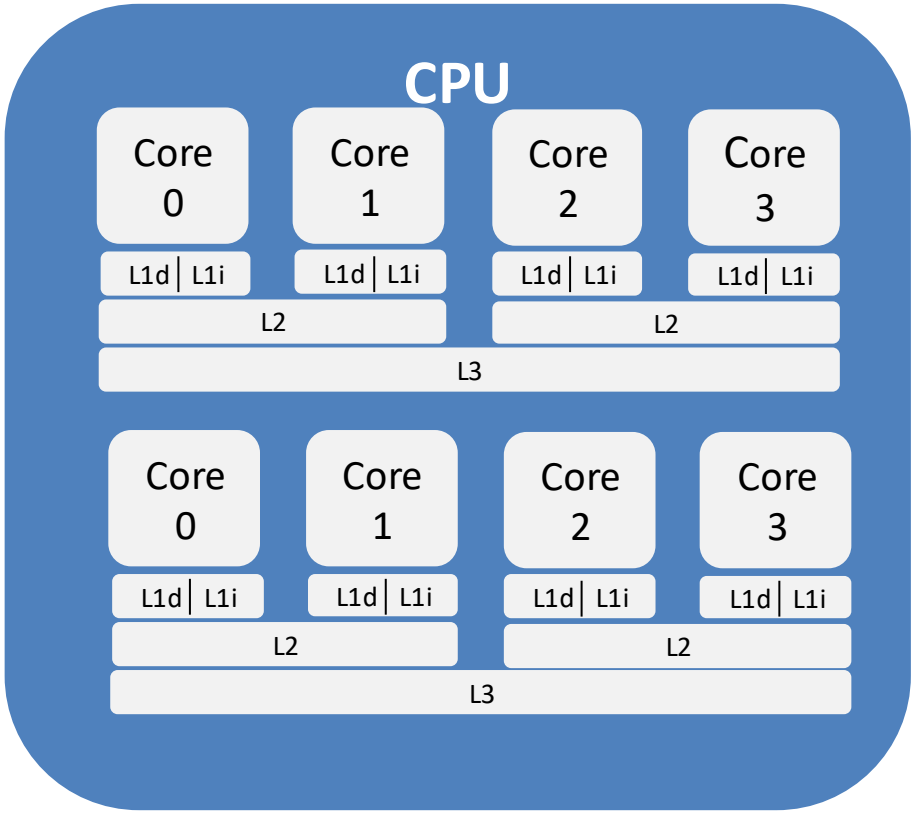

Old CPU internal layout

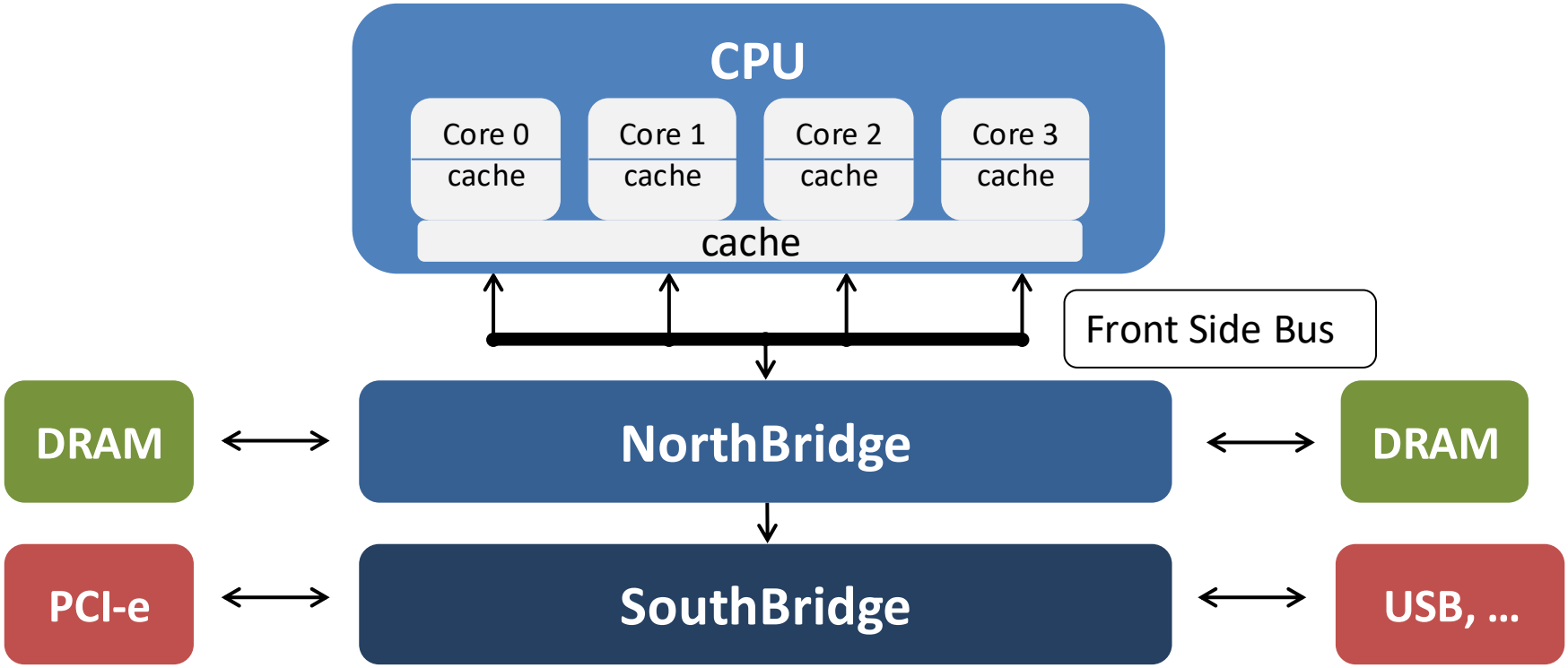

Modern CPU layout

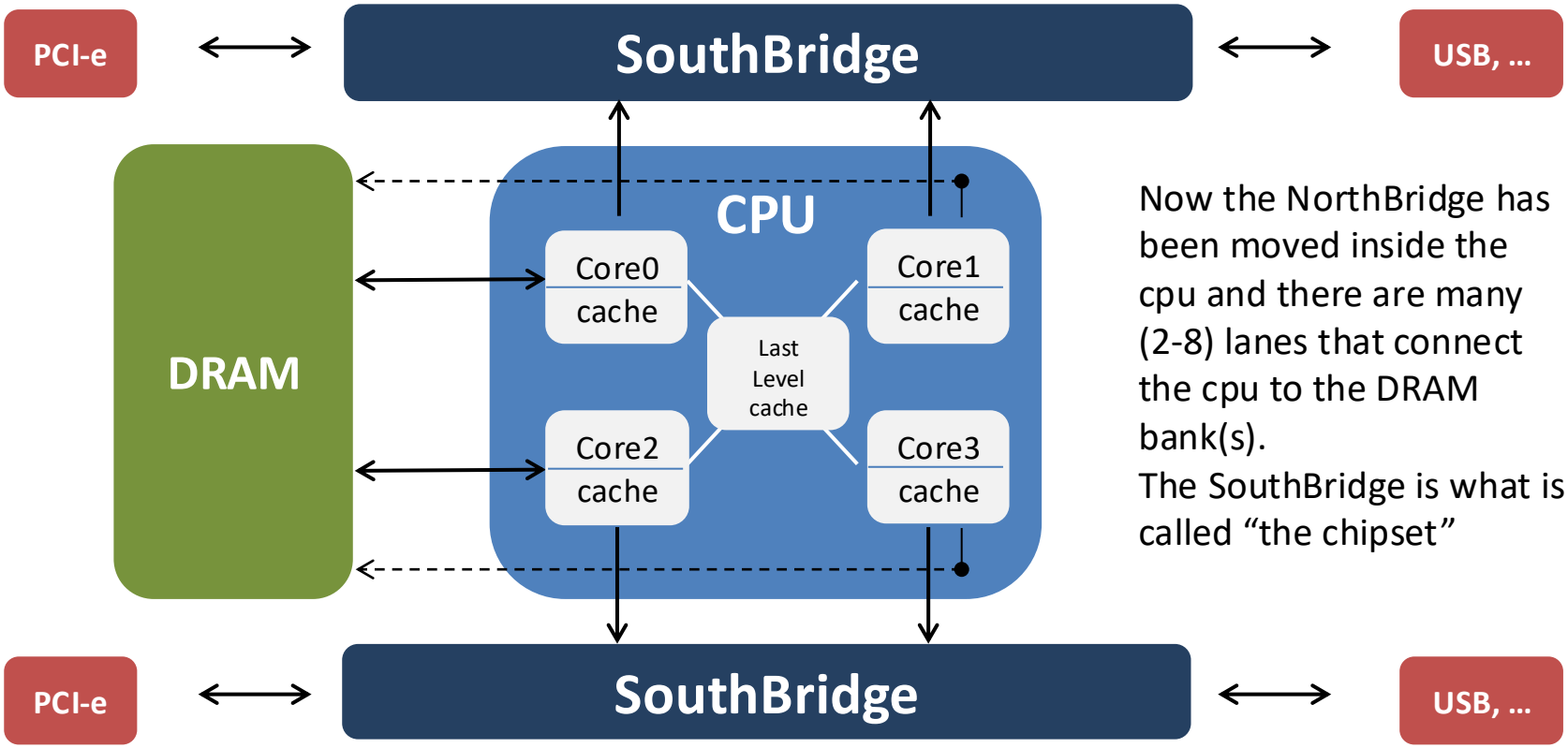

Now the NorthBridge has been moved inside the cpu and there are many (2-8) lanes that connect the cpu to the DRAM bank(s).
The SouthBridge is what is called “the chipset”

Node topology

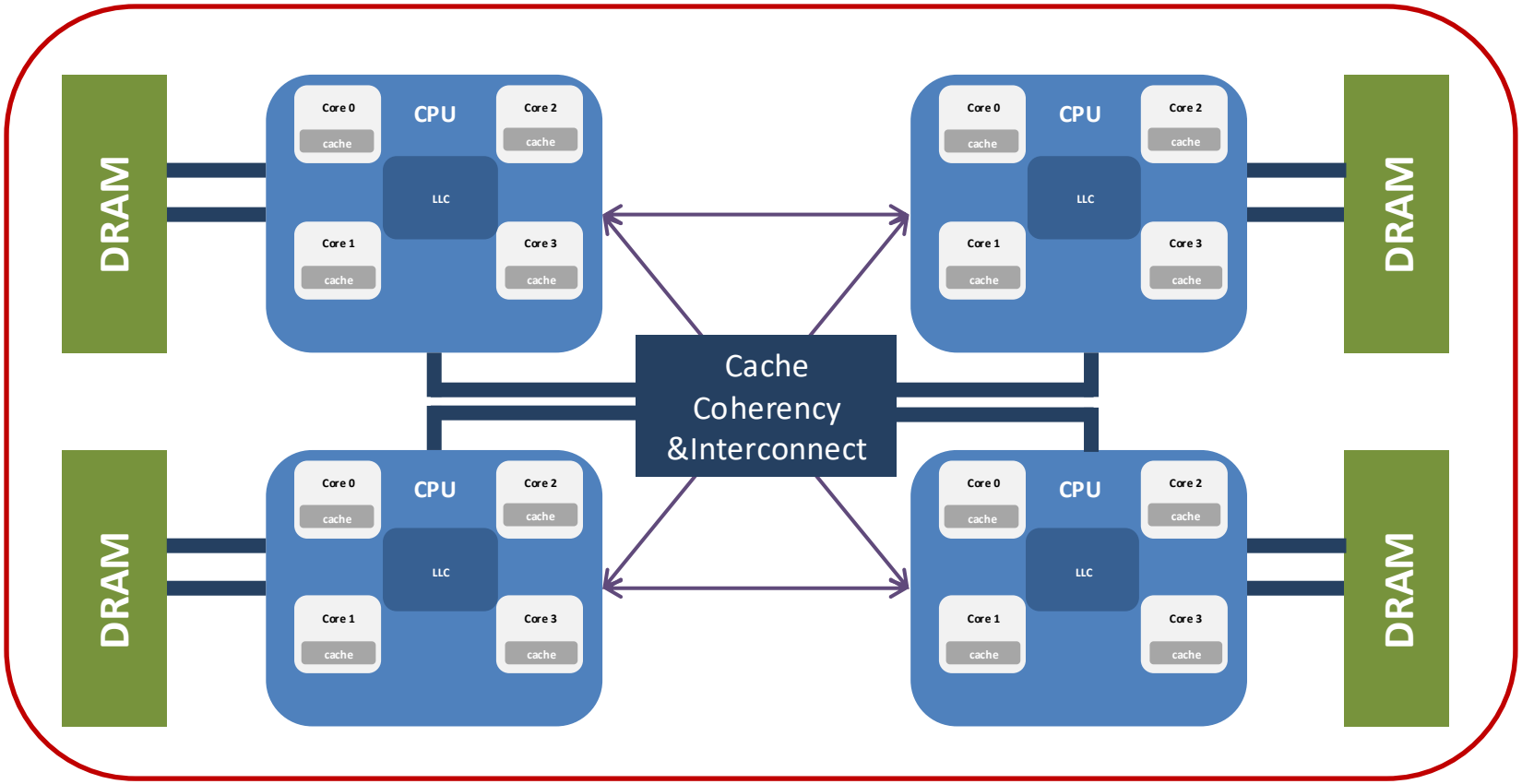

Modern 1U computing nodes

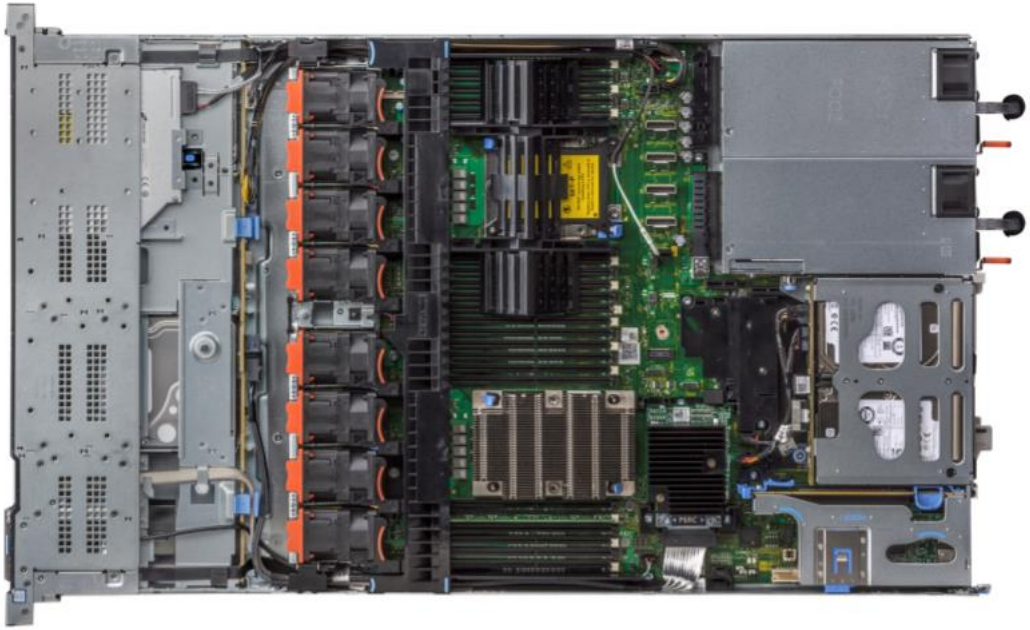

What does one node contain exactly ?

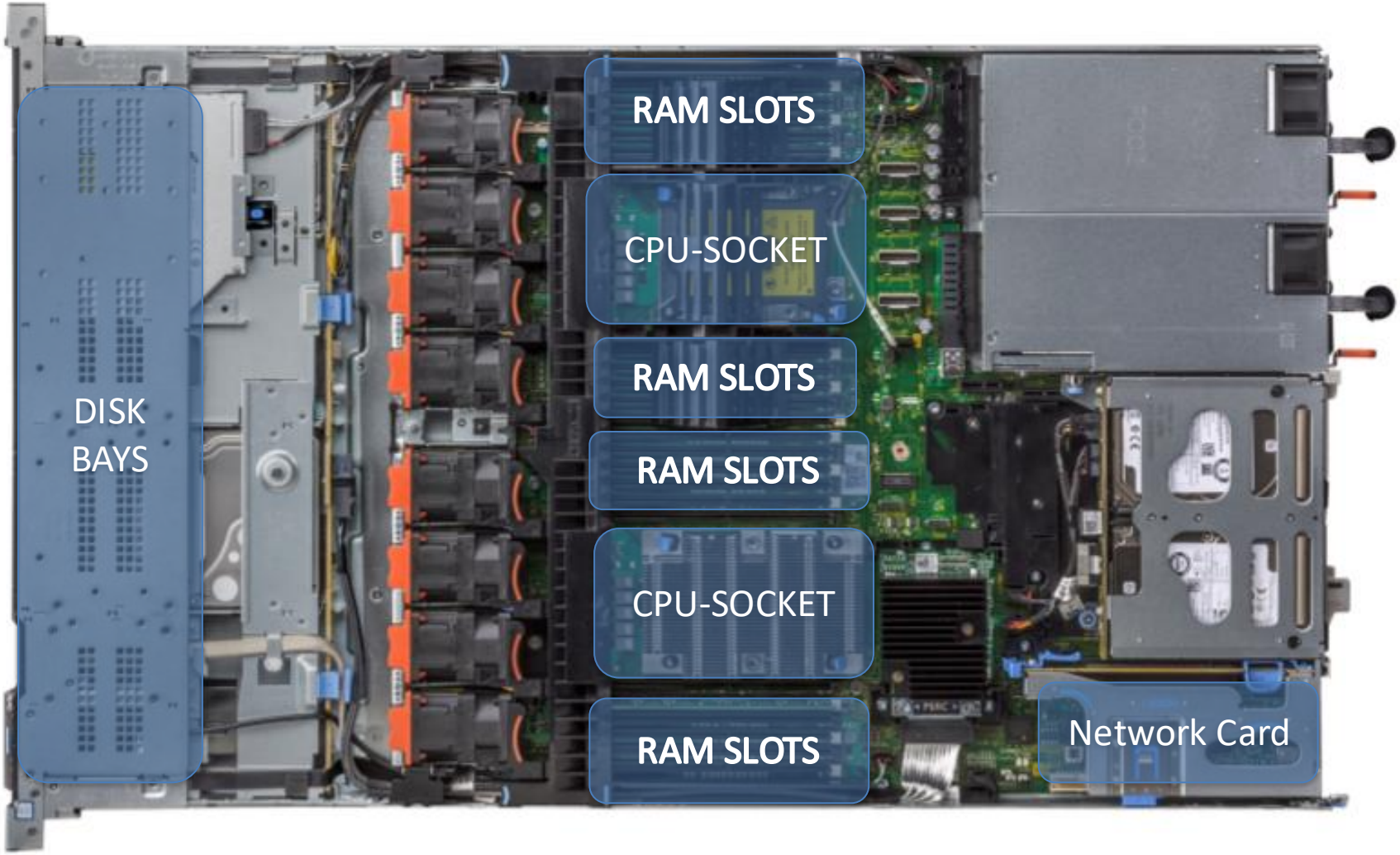

The overall topology

CLUSTER OF COMPUTING NODES

Note: there are many different topologies for the interconnection network.

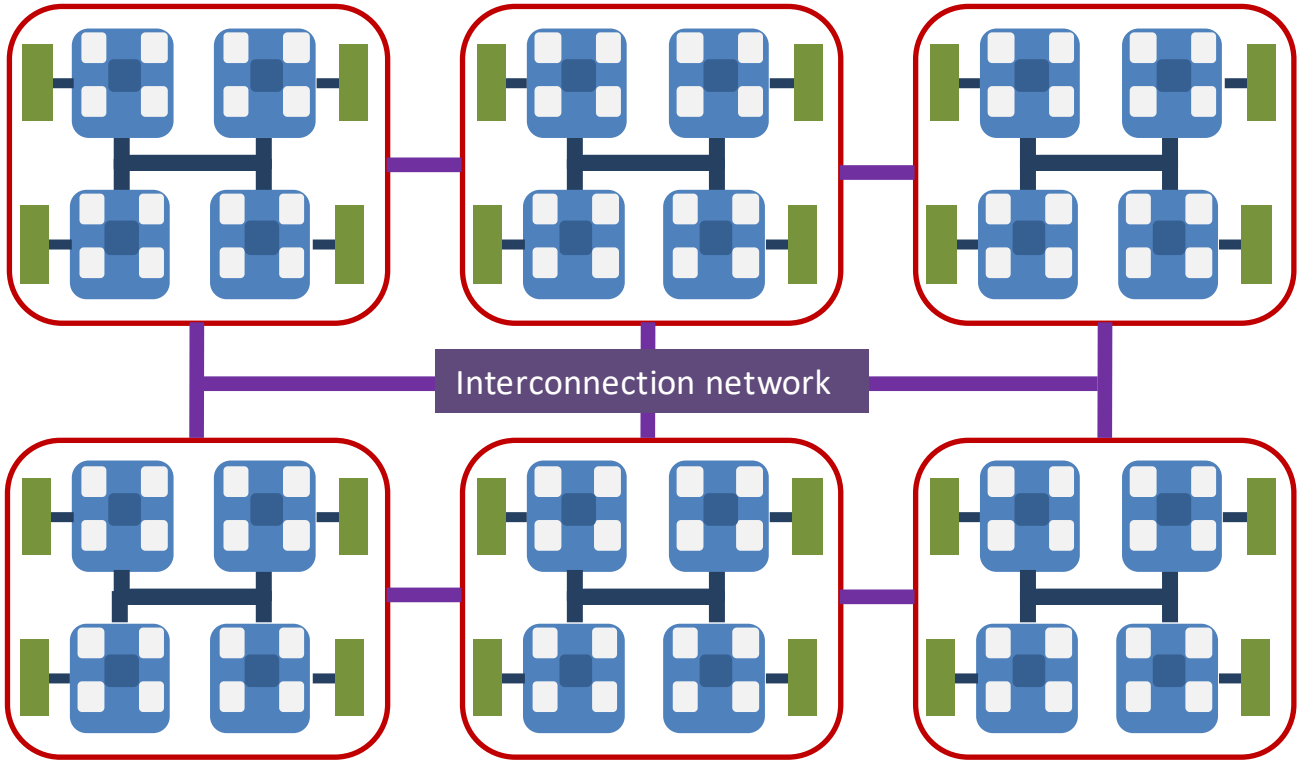

The building blocks of a HPC infrastructure (cluster)

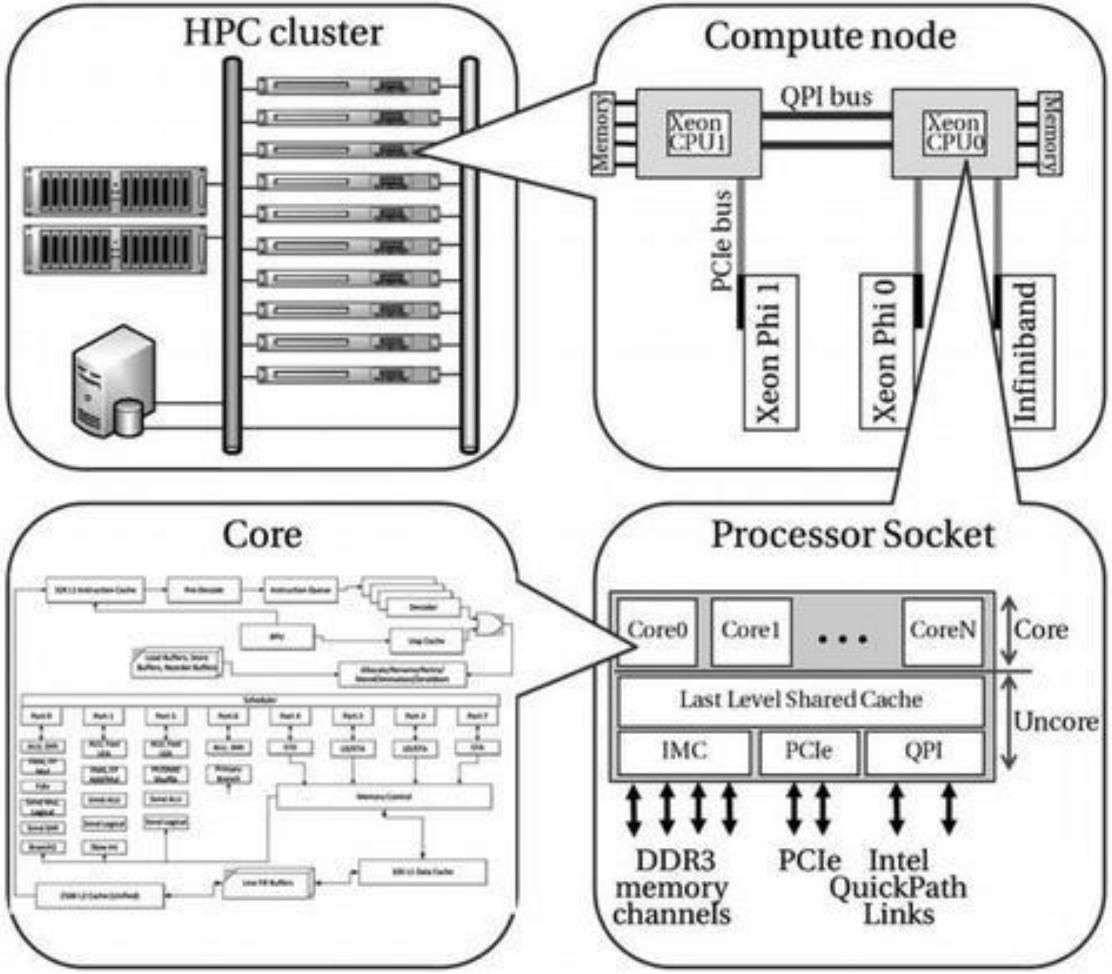

What about memory ?

- Note that on a supercomputer there is a hybrid approach as for the memory placement:
- the memory on a single nodes can be accessed directly by all the cores on that node, meaning that memory access is a “read/write” instructions irrespectively of what exact memory bank it refers to.

  This is called shared-memory.
- when you use many nodes at a time, a process can not directly access the memory on a different node. It need to issue a request for that, not a read/write instruction.

  That is named distributed memory.
- These are hardware concepts, i.e. they describe how the memory is physically accessible. However, they do also refer to programming paradigms, as we’ll see in a while.

Shared memory: UMA

Uniform memory access (UMA): Each processor has uniform access to memory. Also known as symmetric multiprocessors (SMP)

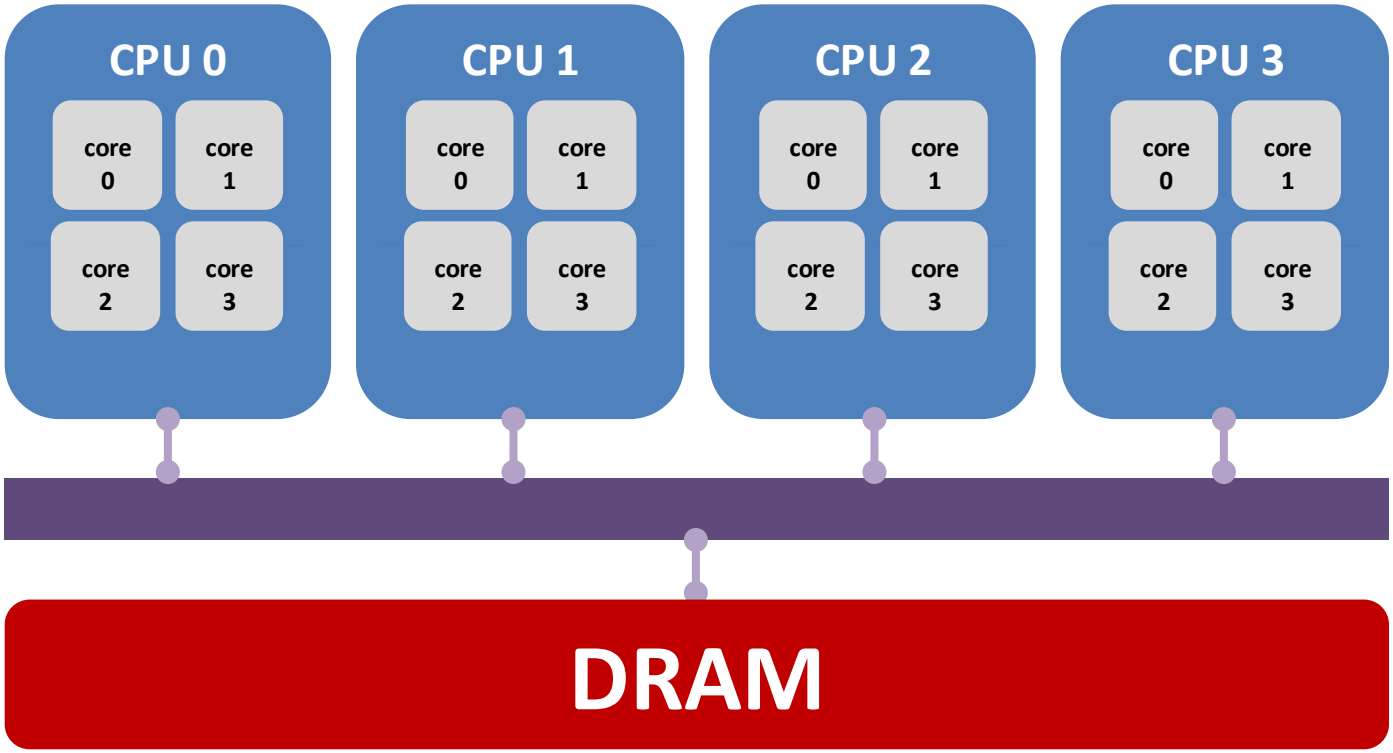

Shared memory: NUMA

Non-uniform memory access (NUMA): Time for memory access depends on location of data. Local access is faster than non-local access.

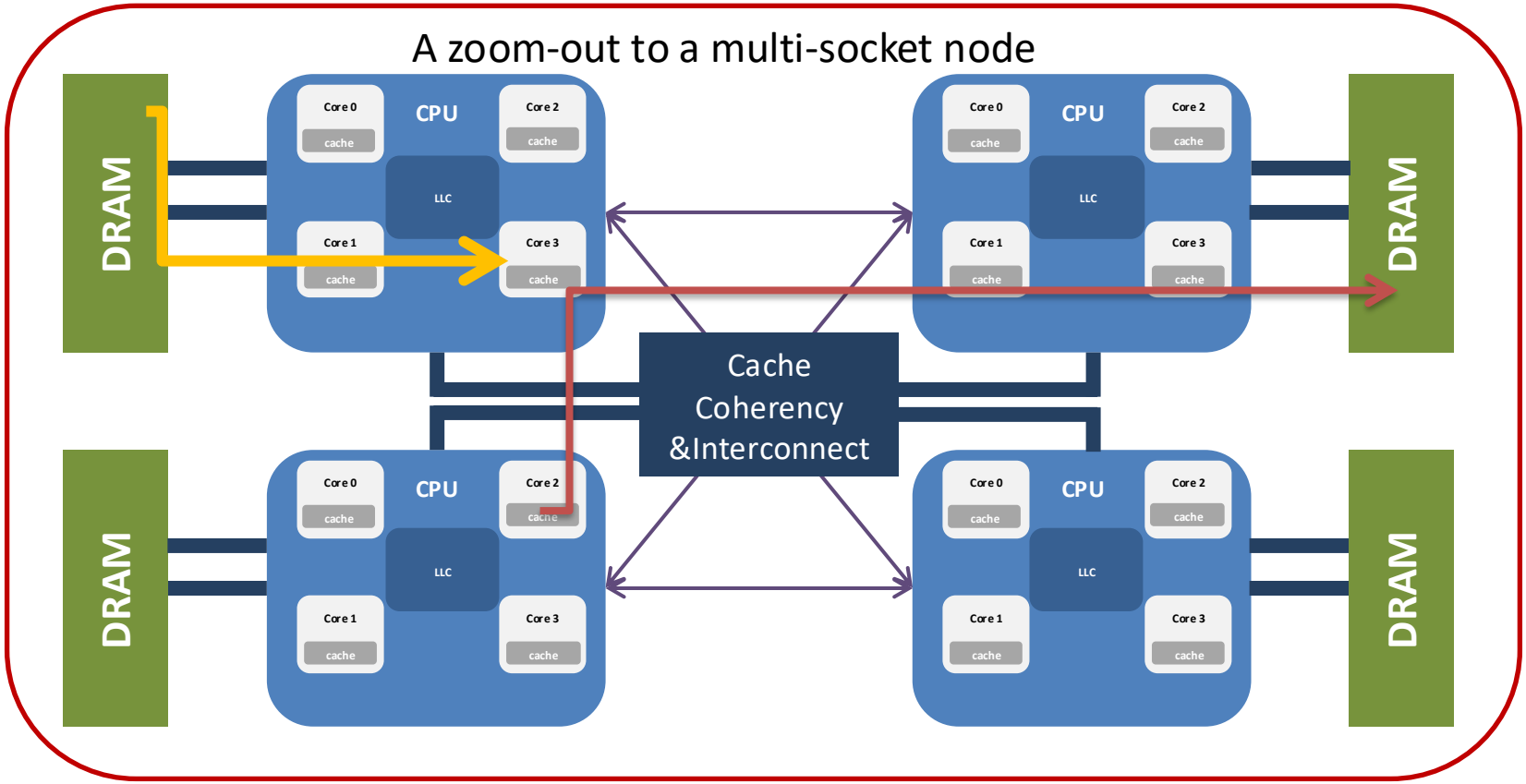

Memory wall problem

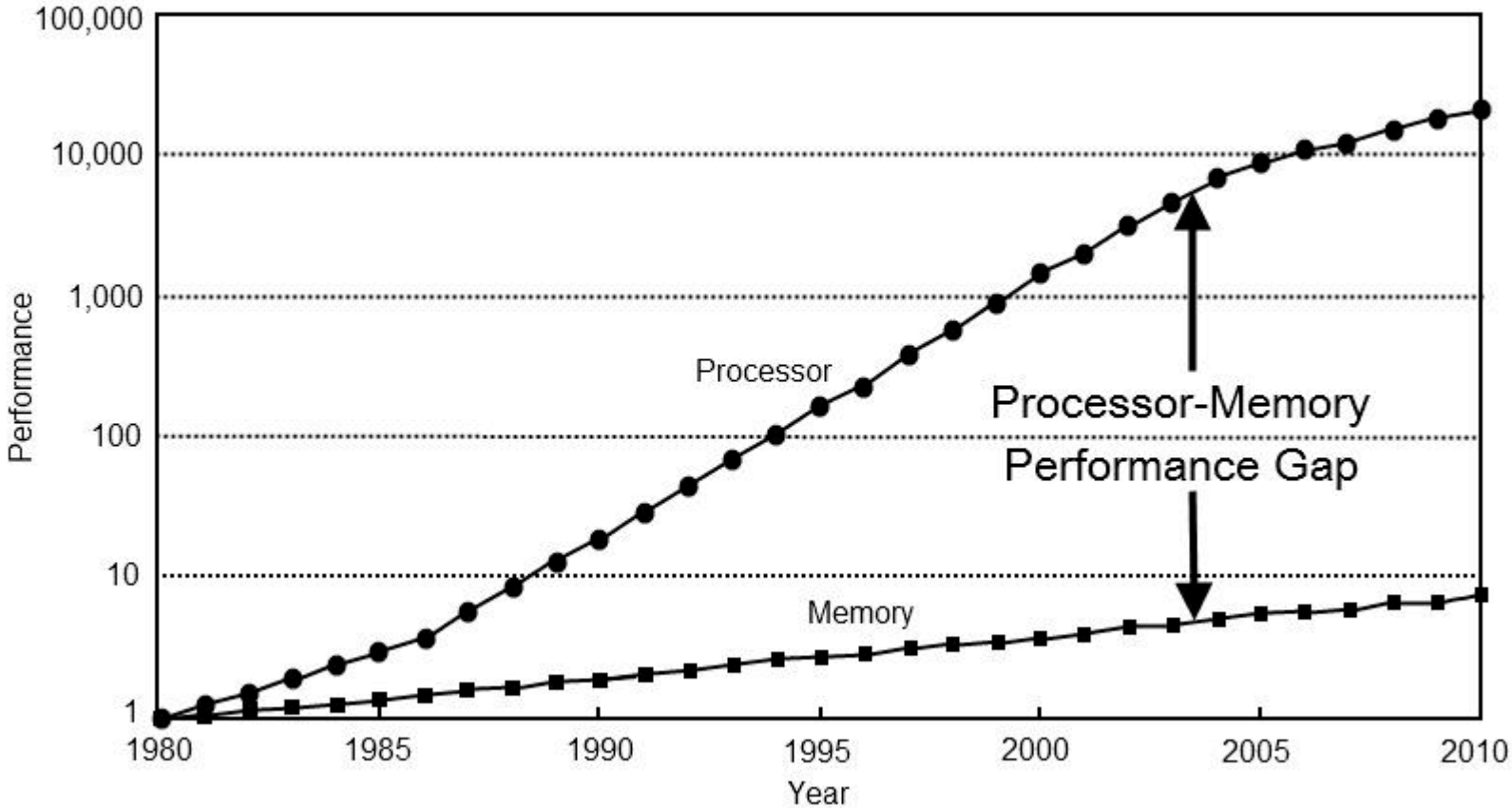

Challenges for multicore

- Relies on effective exploitation of multiple-thread parallelism
  - Need for parallel computing model and parallel programming model
- Aggravates memory wall problem
  - Memory bandwidth
    - Way to get data out of memory banks
    - Way to get data into multi-core processor array
    - Memory latency
  - Cache sharing

a little bit of jargon..

- Multiprocessor = server with more than 1 CPU
- Multicore = a CPU with more than 1 core
- Processor = CPU = socket

BUT SOMETIME:

- Processor = core
- a process for each processor (i.e. each core)

Parallellism within a HPC node

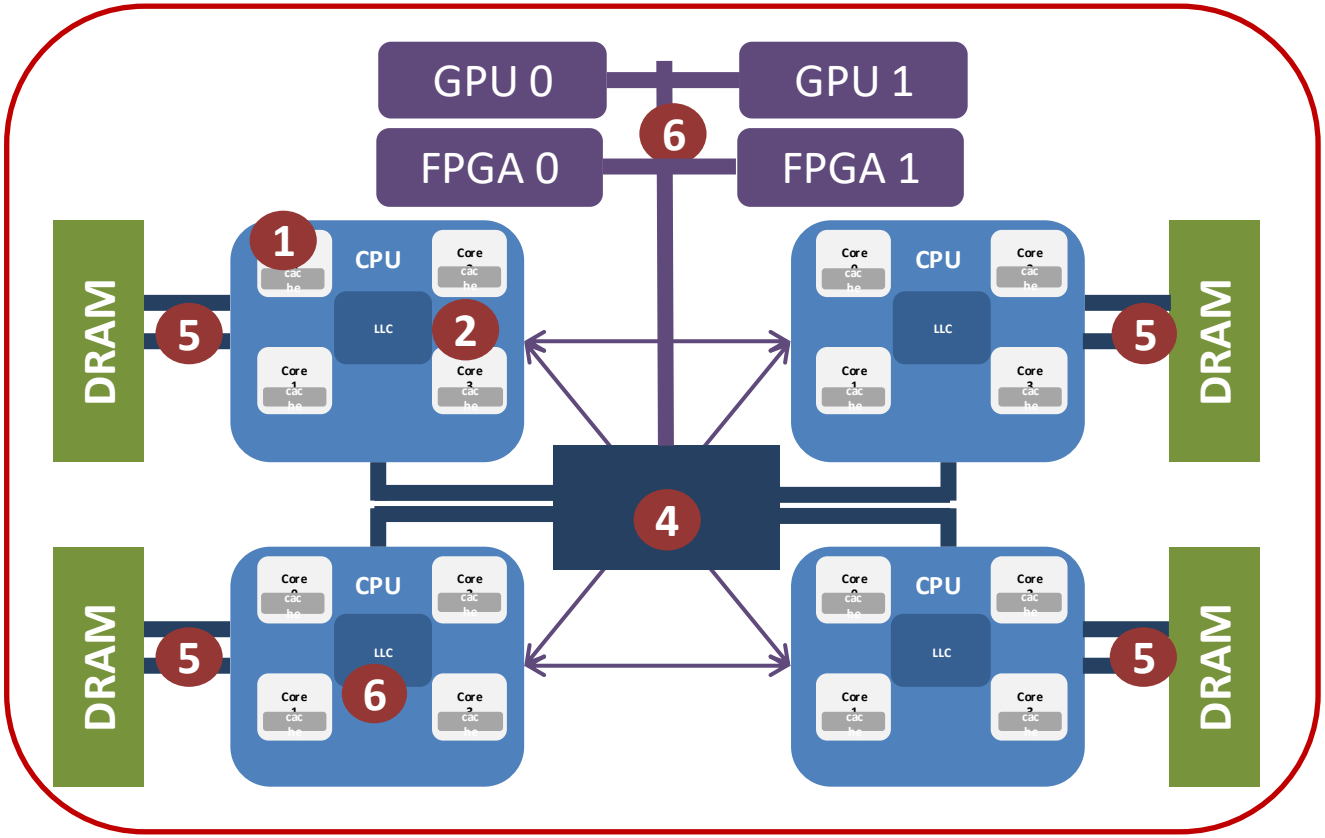

- Parallel resources
  - ILP/SIMD units (1)
  - Cores (2)
  - Inner cache levels (3)
  - Socket/ccNuma domains (4)
  - Multiple accelerator (5)

Discovering a Numa topology

- **`numactl`** tool
  it also controls the Linux NUMA policy

- **`/proc/cpuinfo`**

- **`hwloc`** (by OpenMPI)

Agenda

- Why HPC is parallel ? ✓
- Serial Computers ✓
- Moore law/Dennard Scaling ✓
- Parallel computers ✓
- HPC infrastructure
- ORFEO HPC infrastructure

ORFEO
Data Center
Open
Research
Facility for
Epigenomics and
Others

ORFEO HPC nodes..

TYPE OF NODE	RAM x nodo	CORES x nodo	GPU x nodo	Peak performance (Tflops)
10 THIN intel nodes	768 GB	24	-	1,997
2 FAT intel nodes	1536 GB	36	-	3,456
4 GPU intel nodes	256 GB	24	2 V100 (32GB)	2,073 +2x 7
8 EPYC Amd nodes (EPYC 7H12 64-Core Processor)	512 GB	128	-	?
2 DGX Nvidia Station	2048GB	128 (EPYC)	8 A100	?
TOTALE 16	**~ 15 Terabyte**	**1688**	**24**	**~ ?**

Network cluster classification

- HIGH SPEED NETWORK
  - parallel computation
  - low latency /high bandwidth
  - Usual choices: Infiniband...
- I/O NETWORK
  - I/O requests (NFS and/or parallel FS)
  - latency not fundamental/ good bandwidth
  - GIGABIT could be ok /10Gb and/or Infiniband better
- In band Management network
  - management traffic of all services (LRMS/NFS/software etc..)
- Out of band Management network:
  - Remote control of nodes and any other device

Orfeo network

- HIGH SPEED NETWORK 100 Gbit HDR Infiniband
- I/O NETWORK

- In band Management network 25Gbit Ethernet

- Out of band Management network: 1Gbit Ethernet

ORFEO storage: hardware

	FAST storage (NVMe)	FAST storage (SSD)	Standard storage (HDD)	Long term preservation
# of server	4		6	1
RAM	6 x 16GB		6 x 16GB	6 x 16GB
Disk per node	2x 1.6TB NVMe PCIe card	20 x 3.84TB	15 x 12TB	84 x 12TB + 42 x 12TB
Storage provider	CEPH parallel FS	CEPH parallel FS	CEPH parallel FS	Network FS (NFS)
RAW storage	**12TB**	**320 TB**	**1080 TB**	**1,512 TB**

I/O subsystem on ORFEO:

- Home
  - once logged in, each user will land in its home in `/u/[name_of_group]/[name_of_user]
  - e.g. the home of user area is in /u/area/[name_of_users]
  - it's physically located on ceph large FS, and exported via infiniband to all the computational nodes
  - quotas are enforced with a default limit of 2TB for each users
  - soft link are available there for the other areas

```
[cozzini@login ~]$ ls -lrt
total 548398
lrwxrwxrwx 1 cozzini area        18 Apr  7  2020 fast -> /fast/area/cozzini
lrwxrwxrwx 1 cozzini area        21 Apr  7  2020 storage -> /storage/area/cozzini
lrwxrwxrwx 1 cozzini area        21 Apr 16  2020 scratch -> /scratch/area/cozzini
```

I/O subsystem on ORFEO:

- /Scratch
  - it is large area intended to be used to store data that need to be elaborated
  - it is also physically located on ceph large FS, and exported via infiniband to all the computational nodes

```
[cozzini@login ~]$ df -h /scratch
Filesystem
Size  Used Avail Use% Mounted on
10.128.6.211:6789,10.128.6.213:6789,..:/  598T   95T  503T  16% /large
```

- /fast
  - is a fast space available for each user, on all the computing nodes
  - is intended to be a **fast scratch area** for data intensive application

```
[cozzini@login ~] df -h /fast
Filesystem
Size  Used Avail Use% Mounted on
10.128.6.211:6789,10.128.6.212:6789,..:/   88T  4.3T   83T   5% /fast
```

I/O subsystem on ORFEO:

- Long term storage:
  - it is NFS mounted via 50bit ethernet link
  - it is intended for long-term storage of final processed dataset

```
[cozzini@login ~]$ df -h  | grep 231
10.128.6.231:/illumina_run           128T   58T   70T  46% /illumina_run
10.128.2.231:/storage                 37T   27T  9.9T  74% /storage
10.128.6.231:/long_term_storage      128T  112T   17T  88% /long_term_storage
10.128.6.231:/analisi_da_consegnare  100T   33T   68T  33%
/analisi_da_consegnare
10.128.6.231:/onp_run_1              117T   27T   91T  23% /onp_run
10.128.2.231:/lage_archive           128T   68T   60T  54% /lage_archive
```

Hardware Completed !

- Why HPC is parallel ? ✓
- Serial Computers ✓
- Moore law/Dennard Scaling ✓
- Parallel computers ✓
- HPC infrastructure ✓
- ORFEO HPC infrastructure ✓