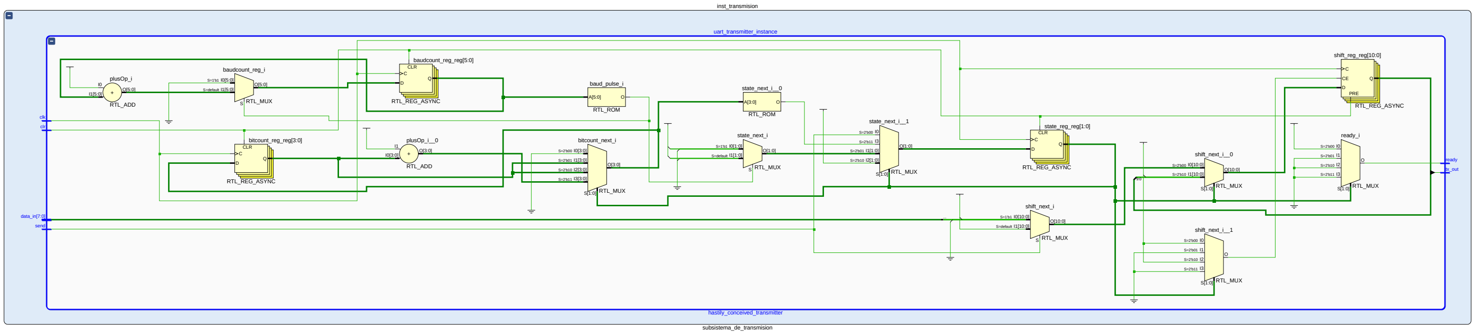
inst_transmision
uart_transmitter_instance
hastily_conceived_transmitter
subsistema_de_transmision
clk
clr
data_in[7:0]
send
ready
tx_out
plusOp_i
I0
I1[5:0]
O[5:0]
RTL_ADD
baudcount_reg_i
S=1'b1 I0[5:0]
S=default I1[5:0]
O[5:0]
S
RTL_MUX
baudcount_reg_reg[5:0]
CLR
C
D
Q
RTL_REG_ASYNC
baud_pulse_i
A[5:0]
O
RTL_ROM
bitcount_reg_reg[3:0]
CLR
C
D
Q
RTL_REG_ASYNC
plusOp_i__0
I1
I0[3:0]
O[3:0]
RTL_ADD
bitcount_next_i
S=2'b00 I0[3:0]
S=2'b01 I1[3:0]
S=2'b10 I2[3:0]
S=2'b11 I3[3:0]
O[3:0]
S[1:0]
RTL_MUX
state_next_i__0
A[3:0]
O
RTL_ROM
state_next_i
S=1'b1 I0[1:0]
S=default I1[1:0]
O[1:0]
S
RTL_MUX
state_next_i__1
S=2'b00 I0
S=2'b11 I3
S=2'b01 I1[1:0]
S=2'b10 I2[1:0]
O[1:0]
S[1:0]
RTL_MUX
state_reg_reg[1:0]
CLR
C
D
Q
RTL_REG_ASYNC
shift_next_i
S=1'b1 I0[10:0]
S=default I1[10:0]
O[10:0]
S
RTL_MUX
shift_next_i__0
S=2'b00 I0[10:0]
S=2'b10 I1[10:0]
O[10:0]
S[1:0]
RTL_MUX
9:0
shift_next_i__1
S=2'b00 I0
S=2'b01 I1
S=2'b10 I2
S=2'b11 I3
O
S[1:0]
RTL_MUX
shift_reg_reg[10:0]
C
CE
D
PRE
Q
RTL_REG_ASYNC
ready_i
S=2'b00 I0
S=2'b01 I1
S=2'b10 I2
S=2'b11 I3
O
S[1:0]
RTL_MUX