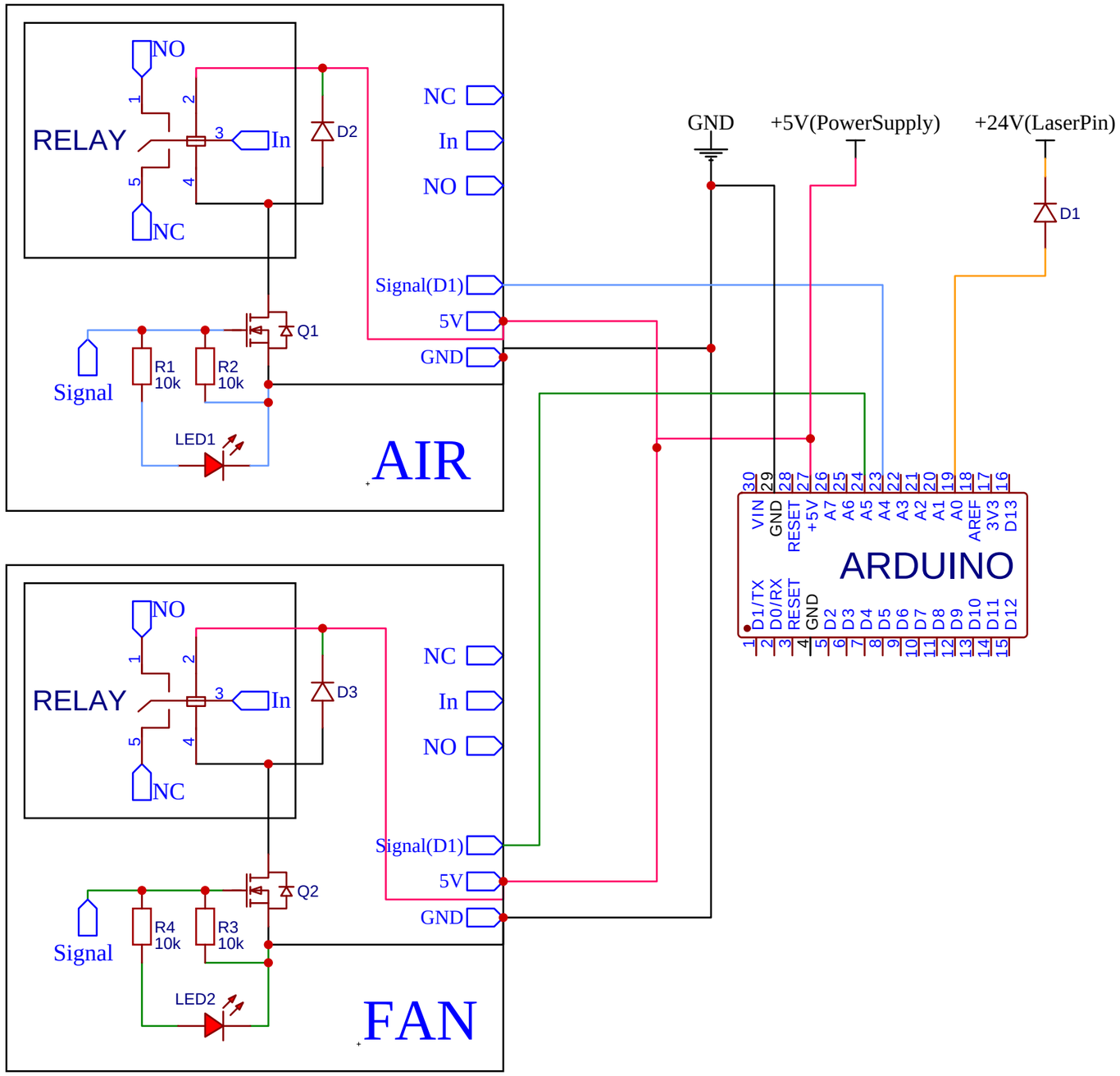


| | |
|---|---|
| TITLE: Sheet_1 | REV: 1.0 |
| EasyEDA | Company: Small Batch Factory |
| | Sheet: 1/1 |
| | Date: 2024-05-01 Drawn By: |