# GD27C-ARM Series

27" Wall-Mount Touch Kiosk — Android / Rockchip ARM

GD27C is a 27-inch wall-mountable interactive touch kiosk powered by Rockchip ARM SoC (RK3568 / RK3399 / RK3588) running Android. Engineered for 24/7 commercial use with industrial-grade power supply and 30,000-hour extended-life LCD, GD27C combines slim wall-mount form factor with PCAP 10-point touch — ideal for retail self-service, ticketing, queue management, restaurant ordering, lobby check-in and indoor wayfinding.

Standard wall-mount bracket included; optional pre-drilled holes support floor-mount conversion. Wide peripheral support (printer, scanner, RFID, NFC, fingerprint, payment terminal) with short customization lead time of 7–35 days.

| 27" | Full HD | PCAP 10-pt | Android | Wall-Mount |
|---|---|---|---|---|
| Display | 1920 × 1080 | Touch | Rockchip ARM | 413 × 867 × 72 mm |

## KEY FEATURES

- 27-inch industrial LCD — 30,000-hour extended life
- Mohs class 7 explosion-proof glass surface
- Android 11 default (RK3568); RK3399 / RK3588 optional
- Wide peripherals: Printer · Scanner · RFID · NFC · Camera
- Slim wall-mount profile — only 72 mm thick
- PCAP 10-point touch — 200 Hz / 4096 × 4096 accuracy
- Industrial-grade power supply — 24/7 commercial use
- Wall-mount bracket included — floor-mount optional
- Customization lead time: 7–35 days
- Total power consumption: < 36 W (Android)

ENT Group Co., Ltd. | 70/5 Moo 4, Metro Biztown, Chaengwattana 2, Pak Kret, Nonthaburi 11120, Thailand
Tel: 02-045-6104, 095-739-1053 | Sales@entgroup.co.th | www.entgroup.co.th | Tax ID: 0135558013167

# DIMENSIONS & MOUNTING

Slim wall-mount kiosk form factor — overall 413 × 867 × 72 mm (W × L × T). Active display area 599 × 337.5 mm (16:9). Net weight 14 kg, gross 20.5 kg with packaging.

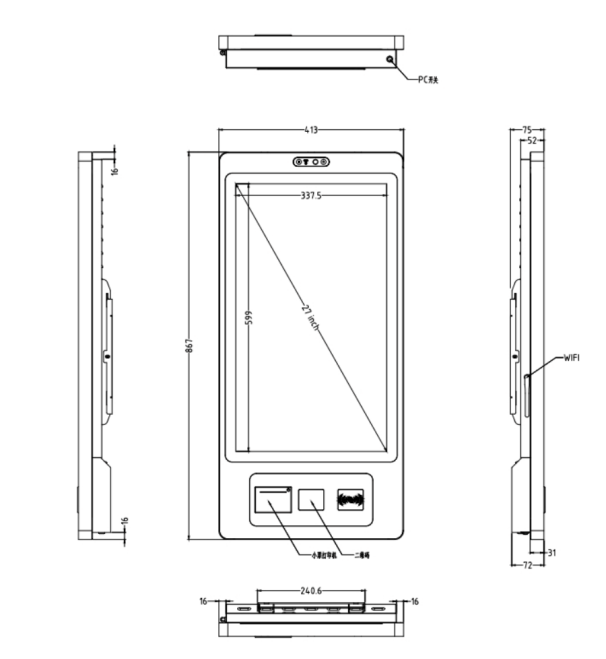


Front view — overall outline & mounting reference

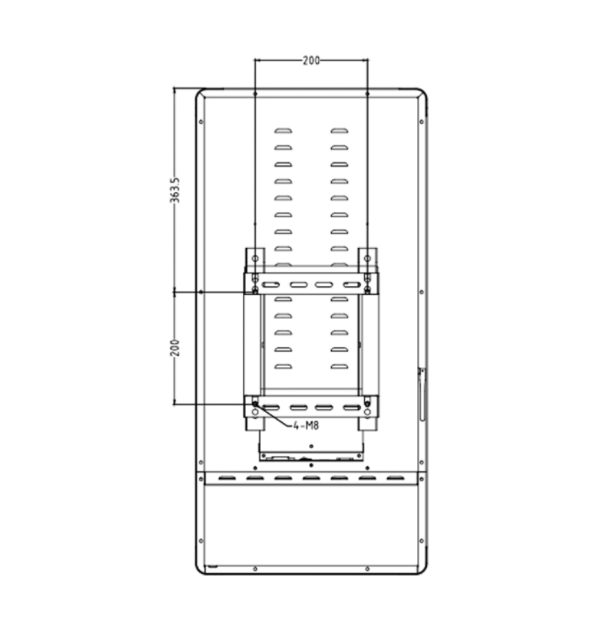


Rear view — wall-mount bracket pattern

## Dimensions & Weight

| | |
|---|---|
| **Machine Dimensions (W × L × T)** | 413 × 867 × 72 mm |
| **Package Dimensions (W × L × T)** | 560 × 1020 × 220 mm |
| **Net Weight** | 14 kg |
| **Gross Weight** | 20.5 kg |
| **Mounting** | Wall-mount bracket (standard) / Floor-mount (optional pre-drilled holes) |

# TECHNICAL SPECIFICATIONS

## Configuration (Android / Rockchip ARM)

| | |
|---|---|
| **PC System** | Rockchip ARM SoC — RK3568 / RK3399 / RK3588 |
| **GPU** | ARM G52 2EE / Mali-T864 / Mali-G610 |
| **Memory** | 2 GB (4 GB opt.) / 4 GB / 4 GB (8 GB opt.) |
| **Storage** | 32 GB eMMC / 64 GB eMMC / 64 GB (128 GB opt.) eMMC |
| **Pre-installed OS** | Android 11 (RK3568) / Android 9 (RK3399) / Android 12 (RK3588) |
| **Network — RK3568** | 10/100M RJ45 + 802.11 a/b/g/n/ac WiFi |
| **Network — RK3399 / RK3588** | 100/1000M RJ45 + 802.11 a/b/g/n/ac WiFi |

## LCD Panel

| | |
|---|---|
| **Screen Diagonal** | 27 inches |
| **Active Display Area** | 599 × 337.5 mm |
| **Aspect Ratio** | 16 : 9 |
| **Physical Resolution** | 1920 × 1080 (Full HD) |
| **Colors** | 16.7 M |
| **Brightness** | ≥ 250 cd/m² |
| **Contrast Ratio** | 1000 : 1 |
| **Viewing Angle (H/V)** | 178° / 178° |
| **Backlight Lifetime** | LED 30,000 hours |
| **Refresh Rate** | 60 Hz |

## Touch Panel

| | |
|---|---|
| **Touch Technology** | PCAP (Projected Capacitive) |
| **Response Time** | < 5 ms |
| **Touch Points** | 10 points standard |
| **Touch Effective Recognition** | > 1.5 mm |
| **Scanning Frequency** | 200 Hz |
| **Scanning Accuracy** | 4096 × 4096 |
| **Working Voltage / Current** | DC +5 V ± 5% / 180 mA |
| **Surface Hardness** | Mohs class 7 explosion-proof glass |

# ENVIRONMENT, POWER & I/O

## Operating Environment

| | |
|---|---|
| **Operating Temperature** | 0 °C to 50 °C |
| **Operating Humidity** | 10% to 80% |
| **Storage Temperature** | –5 °C to 60 °C |
| **Storage Humidity** | 10% to 85% |

## Power Supply

| | |
|---|---|
| **Power Input** | 110–240 V AC, 50/60 Hz |
| **Power Output** | DC 12 V / 4 A |
| **Standby Power** | ≤ 0.5 W |
| **Overall Power Consumption** | Android < 36 W (X86 < 48 W) |

## External Connectors & Included Items

| External Connectors | Included in the Delivery |
|---|---|
| • RJ45 LAN × 1<br>• USB 2.0 × 2<br>• Power Socket × 1<br>• WiFi antenna × 1 | • Manual × 1<br>• WiFi antenna × 1<br>• Wall-mount bracket × 1<br>• AC power cable × 1 |

## Built-in & Optional Peripherals

| Peripheral | Specification |
|---|---|
| **Thermal Printer** | MS-E80I — 250 mm/s max, 72 mm print width, 80 mm paper, 576 dots/line, auto cut |
| **Barcode / QR Scanner** | EMT8020 — 640×480 CMOS, 5 mil resolution, 2D (PDF417, QR, DataMatrix) + 1D (Code 128, EAN, |
| **RFID Card Reader** | M11 — IC Mifare1 / CPU / TypeA / 14443A, IC/ID protocols, read/write IC + read ID |
| **Optional Modules** | Fingerprint sensor · Metal keyboard · Card dispenser · Payment terminal · Camera · NFC · 4G LTE · |

# APPLICATIONS & ORDERING

## Recommended Applications

| Sector | Use Case |
|---|---|
| **Retail Self-Service** | POS, queue ticket, order-taking, in-store wayfinding. |
| **Restaurant** | Self-order kiosk, table-side ordering, menu display. |
| **Hospitality / Lobby** | Hotel check-in, visitor registration, info wayfinding. |
| **Healthcare** | Patient queue, registration, hospital wayfinding. |
| **Government / Library** | Self-service counters, public kiosks, document terminals. |
| **Corporate / Smart Office** | Visitor reception, meeting room booking, attendance. |

How to order — B2B Quotation Workflow. ENT Group operates as a B2B procurement platform. Add items to your cart on entgroup.co.th; our sales team will review your request and respond with a formal quotation (PDF). Pricing, lead time, peripheral customization and installation terms are tailored to each project.

### View Product Page

Scan to view GD27C — full specs & peripherals
entgroup.co.th/products/interactive-display

### Add LINE Official

Chat with our sales team for quotations & support
LINE ID: @entgroup

### Get a Tailored Quotation

Scan either QR code to connect with ENT Group instantly. Our B2B sales team will prepare a quotation tailored to your project — including volume pricing, peripheral customization, installation and warranty.

Tel 02-045-6104, 095-739-1053
Email Sales@entgroup.co.th
Web www.entgroup.co.th