GD238C — 23.8" Wall Mounting Touch Kiosk (ARM)

Self-service kiosk แบบติดผนัง · จอ FHD 23.8" · PCAP Touch 10 จุด · รองรับ Android (Rockchip RK3568 / RK3399 / RK3588)

23.8" FHD 1920×1080	PCAP 10-POINT TOUCH	ANDROID 11/12	WALL MOUNT

Key Highlights

24/7 Commercial Use	Industrial-grade power supply · LED backlight อายุการใช้งาน 30,000 ชั่วโมง
Free Customization	เลือก peripheral ได้หลากหลาย / รองรับ POS terminal ของลูกค้า
Android / Windows Optional	Android 11 default · เลือก Celeron J6412 หรือ i5 12th Gen ได้
Easy Wall / Floor Mount	มาพร้อม wall-mount bracket · มี option รูสำหรับยึดพื้น

Android System Options (เลือก SoC)

Spec	RK3568	RK3399	RK3588 (High-end)
CPU	Rockchip RK3568	Rockchip RK3399	Rockchip RK3588
GPU	ARM G52 2EE	Mali-T864	Mali-G610
Memory	2GB (4GB optional)	4GB	4GB (8GB optional)
Storage	32GB eMMC	64GB eMMC	64GB / 128GB eMMC
Network	10/100M RJ45 · Wi-Fi a/b/g/n/ac	1000M RJ45 · Wi-Fi a/b/g/n/ac	1000M RJ45 · Wi-Fi a/b/g/n/ac
Pre-installed OS	Android 11	Android 9	Android 12

LCD Panel · Touch Panel

Screen Diagonal	23.8 inch	Technology	PCAP (Projected Capacitive)
Active Area	529 × 298.5 mm	Response Time	< 5 ms
Aspect Ratio	16:9	Touch Points	10 points (standard)
Resolution	1920 × 1080 (FHD)	Effective Recognition	> 1.5 mm
Colours	16.7M	Scanning Frequency	200 Hz
Brightness	250 cd/m²	Scanning Accuracy	4096 × 4096
Contrast	1000:1	Working Current/Voltage	180 mA / DC +5V ±5%
Viewing Angle (H/V)	178° / 178°	Surface Hardness	Mohs class 7 explosion-proof glass
Backlight Lifetime	LED 30,000 hours		
Refresh Rate	60 Hz		

Dimension Drawing · Mechanical

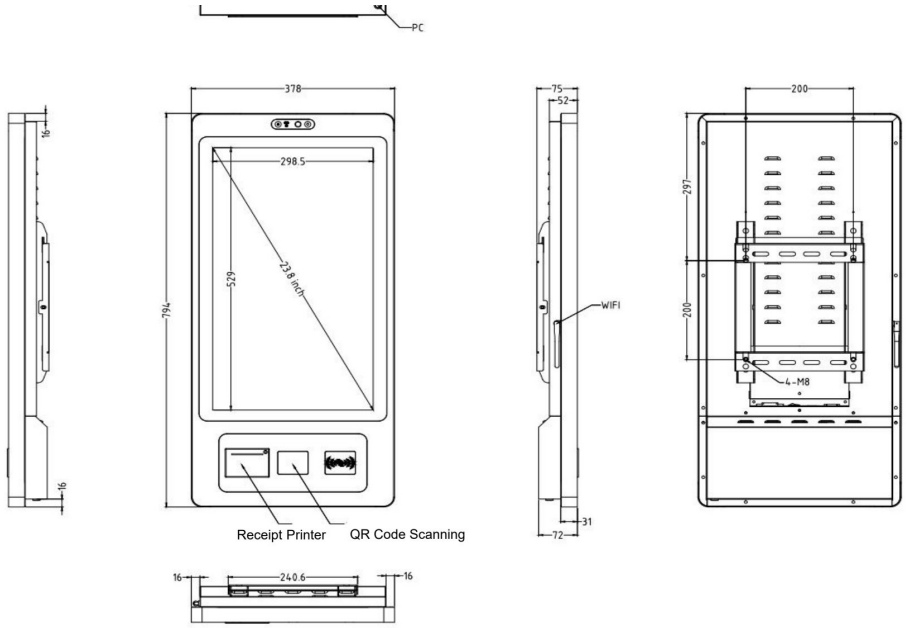

Machine (W × H × T)	378 × 794 × 72 mm
Package (W × H × T)	520 × 950 × 220 mm
Net Weight	14 kg
Gross Weight	19 kg
Active Area	529 × 298.5 mm (23.8")
VESA / Mount	Wall-mount bracket included · 4-M8 mounting holes (ดูแบบด้านหลัง)

Power Supply · Operation Environment

Power Input	110–240V AC, 50/60 Hz	Operating Temp	0°C – 50°C
Power Output	DC 12V / 4A	Operating Humidity	10% – 80%
Standby	0.5 W	Storage Temp	-5°C – 60°C
Overall Consumption	Android < 36 W · X86 < 48 W	Storage Humidity	10% – 85%

External Connectors · Included in Delivery

RJ45 LAN	×1	Manual	×1
Power Socket	×1	Wi-Fi Antenna	×1
USB 2.0	×2	Wall-Mount Bracket	×1
		AC Power Cable	×1

Built-in Peripherals (Standard)

Module	Model	Key Specs
Thermal Printer	MS-E80I	250 mm/s · 72 mm print width · 80 mm paper · 576 dots/line · auto-cut
Barcode / QR Scanner	EMT8020	640×480 CMOS · 5 mil resolution · FoV 68°×51° · 1D/2D (PDF417, QR, DataMatrix, Code128)
RFID Card Reader	M11	IC Mifare1 / CPU TypeA / 14443A · Read/Write IC · Read ID

Optional add-ons: Fingerprint sensor · Metal keyboard · Card dispenser · Payment terminal · Camera · NFC payment · 4G LTE · Battery UPS (ระยะเวลาปรับแต่ง 7–35 วัน)