GD238C — 23.8" Wall Mounting Touch Kiosk (X86)

Self-service kiosk แบบติดผนัง · จอ FHD 23.8" · PCAP Touch 10 จุด · รองรับ Windows 10/11 (Intel Celeron / Core i3 / i5 / i7)

23.8" FHD 1920×1080	PCAP 10-POINT TOUCH	WINDOWS 10/11	WALL MOUNT

Key Highlights

24/7 Commercial Use	Industrial-grade power supply · LED backlight อายุการใช้งาน ≥30,000 ชั่วโมง
Free Customization	เลือก peripheral ได้หลากหลาย / รองรับ POS terminal ของลูกค้า
Android / Windows Optional	Android 11 default · เลือก Celeron J6412 หรือ i5 12th Gen ได้
Easy Wall / Floor Mount	มาพร้อม wall-mount bracket · มี option รูสำหรับยึดพื้น

X86 System Options (เลือก CPU)

Spec	Celeron J6412	Core i3 12th	Core i5 12th / i7 12th
CPU	Intel Celeron J6412 (Quad-core)	Intel Core i3-1215U	Intel Core i5-1235U / i7-1255U
GPU	Intel UHD Graphics	Intel UHD Graphics	Intel Iris Xe Graphics
Memory	8GB DDR4 (16GB optional)	8GB DDR4 (16GB optional)	16GB DDR4 (32GB optional)
Storage	128GB SSD (256/512GB optional)	256GB SSD (512GB/1TB optional)	512GB SSD (1TB/2TB optional)
Network	1000M RJ45 · Wi-Fi 5/6	1000M RJ45 · Wi-Fi 6	1000M RJ45 · Wi-Fi 6

ENT GROUP Co., Ltd. · 70/5 Moo 4, Metro Biztown, Chaengwattana 2, Khlong Phra Udom, Pak Kret, Nonthaburi 11120 · Tax ID 0135558013167
Tel 02-045-6104 · Mobile 095-739-1053 · Fax 02-045-6105 · Sale@entgroup.co.th · www.entgroup.co.th

Spec	Celeron J6412	Core i3 12th	Core i5 12th / i7 12th
Pre-installed OS	Windows 10/11 IoT	Windows 10/11 Pro	Windows 10/11 Pro

LCD Panel · Touch Panel

Screen Diagonal	23.8 inch	Technology	PCAP (Projected Capacitive)
Active Area	529 × 298.5 mm	Response Time	< 5 ms
Aspect Ratio	16:9	Touch Points	10 points (standard)
Resolution	1920 × 1080 (FHD)	Effective Recognition	> 1.5 mm
Colours	16.7M	Scanning Frequency	200 Hz
Brightness	≥250 cd/m²	Scanning Accuracy	4096 × 4096
Contrast	1000:1	Working Current/Voltage	180 mA / DC +5V ±5%
Viewing Angle (H/V)	178° / 178°	Surface Hardness	Mohs class 7 explosion-proof glass
Backlight Lifetime	LED ≥30,000 hours		
Refresh Rate	60 Hz		

Dimension Drawing · Mechanical

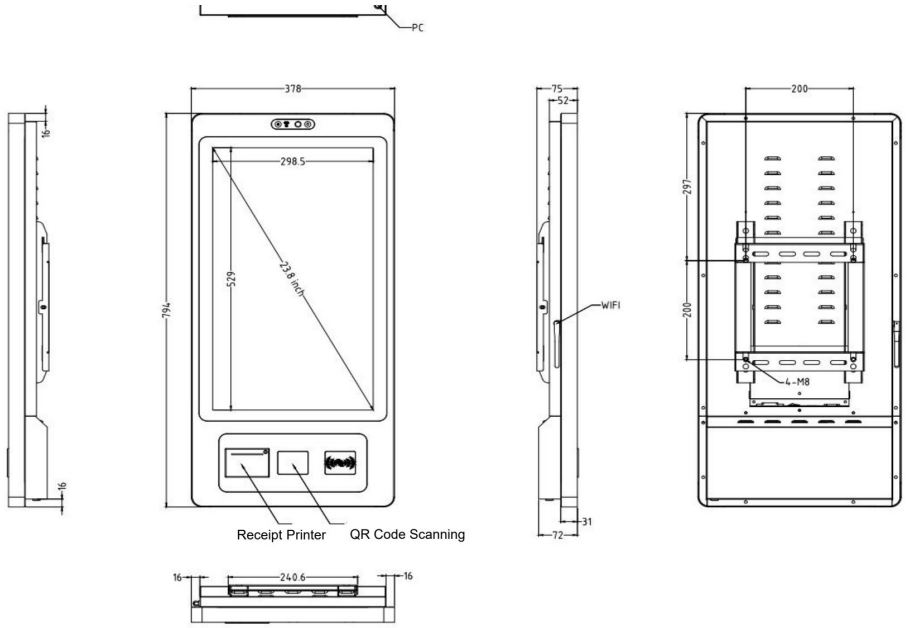

Machine (W × H × T)	378 × 794 × 72 mm
Package (W × H × T)	520 × 950 × 220 mm
Net Weight	14 kg
Gross Weight	19 kg
Active Area	529 × 298.5 mm (23.8")
VESA / Mount	Wall-mount bracket included · 4-M8 mounting holes (ดูแบบด้านหลัง)

Power Supply · Operation Environment

Power Input	110–240V AC, 50/60 Hz	Operating Temp	0°C – 50°C
Power Output	DC 12V / 4A	Operating Humidity	10% – 80%
Standby	≤ 0.5 W	Storage Temp	-5°C – 60°C
Overall Consumption	Android < 36 W · X86 < 48 W	Storage Humidity	10% – 85%

External Connectors · Included in Delivery

RJ45 LAN	×1	Manual	×1
Power Socket	×1	Wi-Fi Antenna	×1
USB 2.0	×2	Wall-Mount Bracket	×1
		AC Power Cable	×1