GD27C-ARM Series

27" Wall-Mount Touch Kiosk — Android / Rockchip ARM

GD27C is a 27-inch wall-mountable interactive touch kiosk powered by Rockchip ARM SoC (RK3568 / RK3399 / RK3588) running Android. Engineered for 24/7 commercial use with industrial-grade power supply and 30,000-hour extended-life LCD, GD27C combines slim wall-mount form factor with PCAP 10-point touch — ideal for retail self-service, ticketing, queue management, restaurant ordering, lobby check-in and indoor wayfinding.

Standard wall-mount bracket included; optional pre-drilled holes support floor-mount conversion. Wide peripheral support (printer, scanner, RFID, NFC, fingerprint, payment terminal) with short customization lead time of 7–35 days.

27"	Full HD	PCAP 10-pt	Android	Wall-Mount
Display	1920 × 1080	Touch	Rockchip ARM	413 × 867 × 72 mm

KEY FEATURES

- 27-inch industrial LCD — 30,000-hour extended life
- Mohs class 7 explosion-proof glass surface
- Android 11 default (RK3568); RK3399 / RK3588 optional
- Wide peripherals: Printer · Scanner · RFID · NFC · Camera
- Slim wall-mount profile — only 72 mm thick
- PCAP 10-point touch — 200 Hz / 4096 × 4096 accuracy
- Industrial-grade power supply — 24/7 commercial use
- Wall-mount bracket included — floor-mount optional
- Customization lead time: 7–35 days
- Total power consumption: < 36 W (Android)

ENT Group Co., Ltd. | 70/5 Moo 4, Metro Biztown, Chaengwattana 2, Pak Kret, Nonthaburi 11120, Thailand
Tel: 02-045-6104, 095-739-1053 | Sales@entgroup.co.th | www.entgroup.co.th | Tax ID: 0135558013167

DIMENSIONS & MOUNTING

Slim wall-mount kiosk form factor — overall 413 × 867 × 72 mm (W × L × T). Active display area 599 × 337.5 mm (16:9). Net weight 14 kg, gross 20.5 kg with packaging.

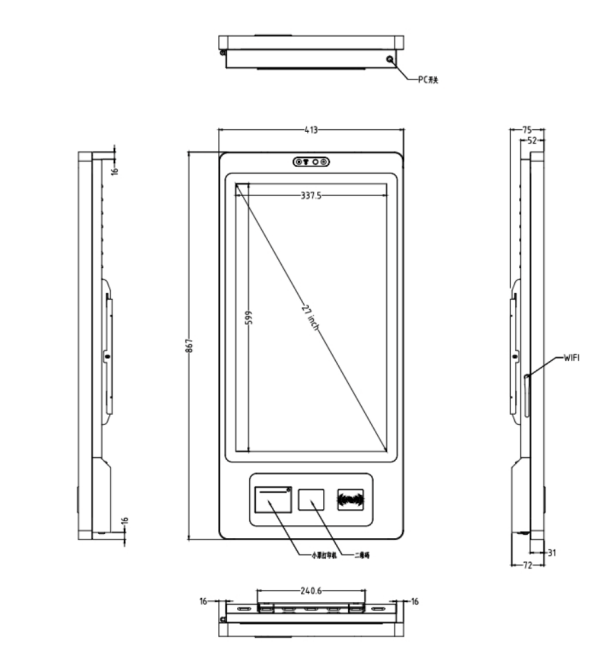

Front view — overall outline & mounting reference

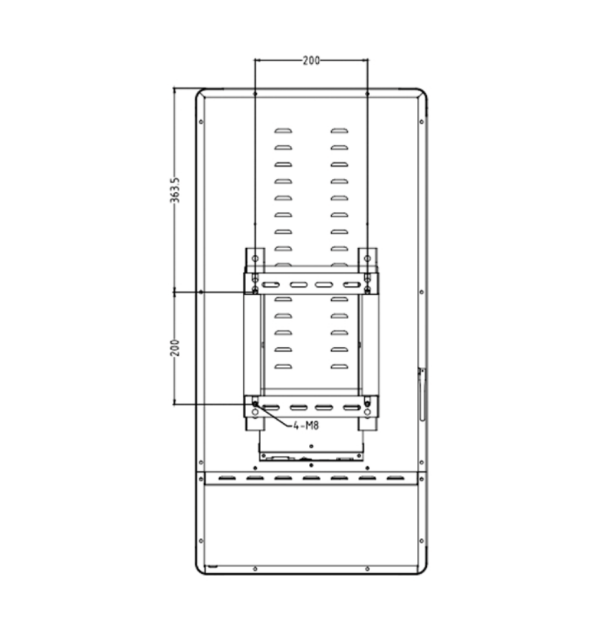

Rear view — wall-mount bracket pattern

Dimensions & Weight

Machine Dimensions (W × L × T)	413 × 867 × 72 mm
Package Dimensions (W × L × T)	560 × 1020 × 220 mm
Net Weight	14 kg
Gross Weight	20.5 kg
Mounting	Wall-mount bracket (standard) / Floor-mount (optional pre-drilled holes)

TECHNICAL SPECIFICATIONS

Configuration (Android / Rockchip ARM)

PC System	Rockchip ARM SoC — RK3568 / RK3399 / RK3588
GPU	ARM G52 2EE / Mali-T864 / Mali-G610
Memory	2 GB (4 GB opt.) / 4 GB / 4 GB (8 GB opt.)
Storage	32 GB eMMC / 64 GB eMMC / 64 GB (128 GB opt.) eMMC
Pre-installed OS	Android 11 (RK3568) / Android 9 (RK3399) / Android 12 (RK3588)
Network — RK3568	10/100M RJ45 + 802.11 a/b/g/n/ac WiFi
Network — RK3399 / RK3588	100/1000M RJ45 + 802.11 a/b/g/n/ac WiFi

LCD Panel

Screen Diagonal	27 inches
Active Display Area	599 × 337.5 mm
Aspect Ratio	16 : 9
Physical Resolution	1920 × 1080 (Full HD)
Colors	16.7 M
Brightness	≥ 250 cd/m²
Contrast Ratio	1000 : 1
Viewing Angle (H/V)	178° / 178°
Backlight Lifetime	LED 30,000 hours
Refresh Rate	60 Hz

Touch Panel

Touch Technology	PCAP (Projected Capacitive)
Response Time	< 5 ms
Touch Points	10 points standard
Touch Effective Recognition	> 1.5 mm
Scanning Frequency	200 Hz
Scanning Accuracy	4096 × 4096
Working Voltage / Current	DC +5 V ± 5% / 180 mA
Surface Hardness	Mohs class 7 explosion-proof glass

ENVIRONMENT, POWER & I/O

Operating Environment

Operating Temperature	0 °C to 50 °C
Operating Humidity	10% to 80%
Storage Temperature	–5 °C to 60 °C
Storage Humidity	10% to 85%

Power Supply

Power Input	110–240 V AC, 50/60 Hz
Power Output	DC 12 V / 4 A
Standby Power	≤ 0.5 W
Overall Power Consumption	Android < 36 W (X86 < 48 W)

External Connectors & Included Items

External Connectors	Included in the Delivery
• RJ45 LAN × 1 • USB 2.0 × 2 • Power Socket × 1 • WiFi antenna × 1	• Manual × 1 • WiFi antenna × 1 • Wall-mount bracket × 1 • AC power cable × 1

Built-in & Optional Peripherals

Peripheral	Specification
Thermal Printer	MS-E80I — 250 mm/s max, 72 mm print width, 80 mm paper roll, 576 dots/line, auto cut
Barcode / QR Scanner	EMT8020 — 640×480 CMOS, 5 mil; 2D: PDF417, QR, DataMatrix; 1D: Code128, EAN, Code39
RFID Card Reader	M11 — IC Mifare1 / CPU / TypeA / 14443A; read/write IC + read ID
Optional Modules	Fingerprint · Metal keyboard · Card dispenser · Payment terminal · Camera · NFC · 4G LTE · UPS

APPLICATIONS & ORDERING

Recommended Applications

Sector	Use Case
Retail Self-Service	POS, queue ticket, order-taking, in-store wayfinding.
Restaurant	Self-order kiosk, table-side ordering, menu display.
Hospitality / Lobby	Hotel check-in, visitor registration, info wayfinding.
Healthcare	Patient queue, registration, hospital wayfinding.
Government / Library	Self-service counters, public kiosks, document terminals.
Corporate / Smart Office	Visitor reception, meeting room booking, attendance.

How to order — B2B Quotation Workflow. ENT Group operates as a B2B procurement platform. Add items to your cart on entgroup.co.th; our sales team will review your request and respond with a formal quotation (PDF). Pricing, lead time, peripheral customization and installation terms are tailored to each project.

View Product Page

Scan to view GD27C — full specs & peripherals
entgroup.co.th/products/interactive-display

Add LINE Official

Chat with our sales team for quotations & support
LINE ID: @entgroup

Get a Tailored Quotation

Scan either QR code to connect with ENT Group instantly. Our B2B sales team will prepare a quotation tailored to your project — including volume pricing, peripheral customization, installation and warranty.

Tel 02-045-6104, 095-739-1053
Email Sales@entgroup.co.th
Web www.entgroup.co.th