# GD238C — 23.8" Wall Mounting Touch Kiosk (ARM)

Self-service kiosk แบบติดผนัง · จอ FHD 23.8" · PCAP Touch 10 จุด · รองรับ Android (Rockchip RK3568 / RK3399 / RK3588) · เหมาะสำหรับร้านอาหาร, ค้าปลีก, สาขาธนาคาร, จุดเช็กอินอัตโนมัติ

**23.8" FHD 1920×1080** | **PCAP 10-POINT TOUCH** | **ANDROID 11/12**

## Key Highlights

| | |
|---|---|
| **24/7 Commercial Use** | Industrial-grade power supply · LED backlight อายุการใช้งาน ≥30,000 ชั่วโมง |
| **Free Customization** | เลือก peripheral ได้หลากหลาย / รองรับ POS terminal ของลูกค้า |
| **Android / Windows Optional** | Android 11 default · เลือก Celeron J6412 หรือ i5 12th Gen ได้ |
| **Easy Wall / Floor Mount** | มาพร้อม wall-mount bracket · มี option รูสำหรับยึดพื้น |

## Android System Options (เลือก SoC)

| Spec | RK3568 | RK3399 | RK3588 (High-end) |
|---|---|---|---|
| CPU | Rockchip RK3568 | Rockchip RK3399 | Rockchip RK3588 |
| Graphic GPU | ARM G52 2EE | Mali-T864 | Mali-G610 |
| Memory | 2GB (4GB optional) | 4GB | 4GB (8GB optional) |
| Storage | 32GB eMMC | 64GB eMMC | 64GB / 128GB eMMC |
| Network | 10/100M RJ45 · Wi-Fi a/b/g/n/ac | 100/1000M RJ45 · Wi-Fi a/b/g/n/ac | 100/1000M RJ45 · Wi-Fi a/b/g/n/ac |
| Pre-installed OS | Android 11 | Android 9 | Android 12 |

## LCD Panel · Touch Panel

| | |
|---|---|
| **Screen Diagonal** | 23.8 inch |
| **Active Area** | 529 × 298.5 mm |
| **Aspect Ratio** | 16:9 |
| **Resolution** | 1920 × 1080 (FHD) |
| **Colours** | 16.7M |
| **Brightness** | ≥250 cd/m² |
| **Contrast** | 1000:1 |
| **Viewing Angle (H/V)** | 178° / 178° |
| **Backlight Lifetime** | LED ≥30,000 hours |
| **Refresh Rate** | 60 Hz |

| | |
|---|---|
| **Technology** | PCAP (Projected Capacitive) |
| **Response Time** | < 5 ms |
| **Touch Points** | 10 points (standard) |
| **Effective Recognition** | > 1.5 mm |
| **Scanning Frequency** | 200 Hz |
| **Scanning Accuracy** | 4096 × 4096 |
| **Working Current/Voltage** | 180 mA / DC +5V ±5% |
| **Surface Hardness** | Mohs class 7 explosion-proof glass |

## Dimension Drawing · Mechanical

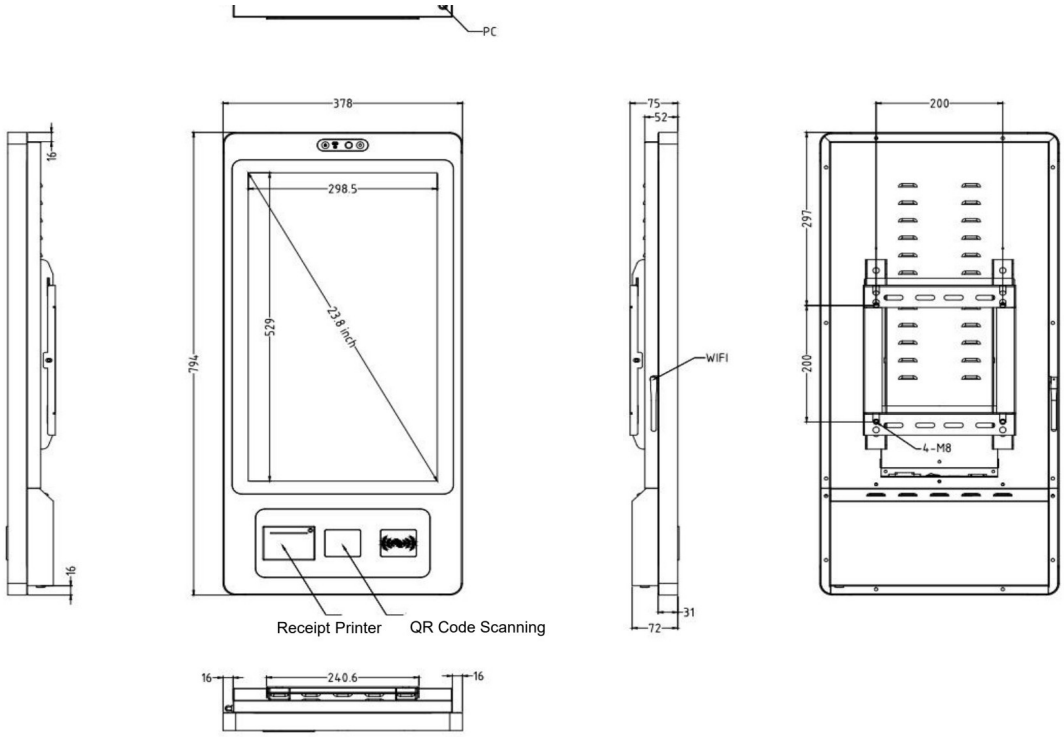


| | |
|---|---|
| **Machine (W × H × T)** | 378 × 794 × 72 mm |
| **Package (W × H × T)** | 520 × 950 × 220 mm |
| **Net Weight** | 14 kg |
| **Gross Weight** | 19 kg |
| **Active Area** | 529 × 298.5 mm (23.8") |
| **VESA / Mount** | Wall-mount bracket included · 4-M8 mounting holes (ดูแบบด้านหลัง) |

## Power Supply · Operation Environment

| | | | |
|---|---|---|---|
| **Power Input** | 110–240V AC, 50/60 Hz | **Operating Temp** | 0°C – 50°C |
| **Power Output** | DC 12V / 4A | **Operating Humidity** | 10% – 80% |
| **Standby** | ≤ 0.5 W | **Storage Temp** | -5°C – 60°C |
| **Overall Consumption** | Android < 36 W · X86 < 48 W | **Storage Humidity** | 10% – 85% |

## External Connectors · Included in Delivery

| | | | |
|---|---|---|---|
| **RJ45 LAN** | × 1 | **Manual** | × 1 |
| **Power Socket** | × 1 | **Wi-Fi Antenna** | × 1 |
| **USB 2.0** | × 2 | **Wall-Mount Bracket** | × 1 |
| | | **AC Power Cable** | × 1 |

## Built-in Peripherals (Standard)

| Module | Model | Key Specs |
|---|---|---|
| Thermal Printer | MS-E80I | 250 mm/s · 72 mm print width · 80 mm paper · 576 dots/line · auto-cut |
| Barcode / QR Scanner | EMT8020 | 640×480 CMOS · 5 mil resolution · FoV 68°×51° · 1D/2D (PDF417, QR, DataMatrix, Code128 |
| RFID Card Reader | M11 | IC Mifare1 / CPU TypeA / 14443A · Read/Write IC · Read ID |

**Optional add-ons:** Fingerprint sensor · Metal keyboard · Card dispenser · Payment terminal · Camera · NFC payment · 4G LTE · Battery UPS (ระยะเวลาปรับแต่ง 7–35 วัน)