หน้าจอแบบสัมผัสเกรดอุตสาหกรรม

EPC-S17X2A

Industrial Panel PC with touch screen

- Intel® Celeron® Processor J1900
- Intel® CoreTM 10th Processor 11
- Intel® Celeron® Processor J6412
- Intel® CoreTM 12th Processor

IS 13252 (Part1)/ IEC 60950-1
R-41295345
www.bis.gov.in

Introduction

The EPC series industrial PC showcases a fanless embedded design powered by CESIPC's proprietary LEGO MODE technology. It offers versatile configuration options, equipped with onboard Intel® Celeron or advanced 10th/12th Gen CoreTM i3/i5/i7 processors, delivering superior performance. Engineered for reliability, the EPC Series ensures high functionality and meets rigorous protection standards, making it an optimal solution for mission-critical industrial applications.

- LEGO MODE with Customizable Function Cards
- i-Door Technology for Efficient, Tailored
- Multi-platform, Multi-tier CPU options
- Board-to-board Design for Stable Performance

Technical Specifications

CPU	Celeron J1900	Celeron J6412	I3-10110U	I5-10210U	I7-10510U	i3-1215U	i5-1235U	i7-1250U
Cores	4	4	2	4	4	6	10	10
Threads	4	4	4	8	8	8	12	12
Frequency	2.0-2.4	2.0-2.6	2.1-4.1	1.6-4.2	1.8-4.9	1.2-4.4	1.3-4.4	1.1-4.7
Cache	2MB	1.5MB	4MB	6MB	8MB	10MB	12MB	12MB
TDP	10W	10W	15W	15W	15W	15W	15W	9W
Graphics	HD	UHD	UHD	UHD	UHD	UHD Graphics	Iris Xe	Iris Xe

► Memory & Storage
Memory: 4-8GB DDR3L / 4-32GB DDR4 / 4-32GB DDR5
Storage: 1 x mSATA SSD / 1 x mSATA + 1 x M.2 SSD / 1 x M.2 SSD
► Power Supply
DC Input: 1 × 3-pin Pluggable Terminal Block for 12V DC
Power Range: 9-36V DC Optional
Power Button: 1x ATX Power On/Off Button
Booting: 1x AT/ATX Mode Switch (Internal settings)
► Wireless Communication
Wi-Fi: Intel N6235 300Mbps, 802.11a/b/g/n, 2.4G / 5G
Wireless Network: 4G LTE Full Netcom Module

► I / O Ports

CPU	Celeron J1900	Celeron J6412	I3-10110U	I5-10210U	I7-10510U	i3-1215U	i5-1235U	i7-1250U
USB 2.0/ Type A	5	4	2	2	2	2	2	2
USB 3.0/ Type A	1	2	4	4	4	4	4	4
RS232/ DB9	4	4	4	4	4	4	4	4
RS485/ DB9	2	2	2	2	2	2	2	2
VGA	1	1	1	1	1	1	1	1
HDMI	1	1	1	1	1	1	1	1
Ethernet	2 x Intel I210	2 x Intel I210	2 x Intel I210	2 x Intel I210	2 x Intel I210	2 x Intel I210	2 x Intel I210	2 x Intel I210
Audio	3.5mm TRRS	3.5mm TRRS	3.5mm TRRS	3.5mm TRRS	3.5mm TRRS	3.5mm TRRS	3.5mm TRRS	3.5mm TRRS

► Display	
LCD Size	17 inch Panel Size
Resolution	1280 x 1024 / 4:3
Brightnesss (cd/m2)	300
Contrast Ratio	500 : 1
Backlight LED Life Time	50,000 hrs (LED Backlight)

► Touch Panel	
Touchscreen Type	Projected Capacitive Touch
	Resistive 5-wire (Optional)

► Mechanical	
Dimension	359.9(W)×283.9(D)×75.1(H)mm
Cutout Size	342.4×269.4mm
Weight	KG N.W.
Material	6063 High-Strength Aluminum Alloy
Mechanical Construction	Aluminum Extrusion + Sheet Metal Structure
Mount	Wall Mount / VESA Mount
Clear CMOS Switch	1x Clear CMOS Switch

► Environmental	
Specification	**Details**
Protection Front Panel	IP65 Compliant
Operating Temperature	0~50℃ (-40~70℃ Optional)
Storage Temperature	-10~60℃
Relative Humidity	10%~90%, Non-condensing
EMC	CE, FCC (According to EN 55032 & EN 55035) EN IE(
Factory	ISO9001: 2015
ODM	BIOS / Boot on LOGO / OEM
MTBF	60,000 Hours
► Operating System	
OS Category	**Supported Versions**
Windows	Windows 10 / Windows 11
	Note: Celeron J1900 can support Windows 7
Linux	Ubuntu 16.04 / 18.04 / 20.04 / 22.04
► Warranty	1 Year (carry-in)
Warranty Option	ลูกค้าสามารถซื้อประกันเพิ่มได้สูงสุด 3 ปี (Optional)

► Product Selection

NO.	Model	Describe Information	Standard Memory	Standard Storage
1	EPC-S1762A	Intel® Celeron® Processor J1900 Processor	4GB	SSD 128GB
2	EPC-S1762A	Intel® Celeron® Processor J6412 Processor	8GB	SSD 256GB
3	EPC-S1762A	Intel® Core™ i3-10110U Processor	8GB	SSD 256GB
4	EPC-S1762A	Intel® Core™ i5-10210U Processor	8GB	SSD 256GB
5	EPC-S1762A	Intel® Core™ i7-10510U Processor	8GB	SSD 256GB
6	EPC-S1762A	Intel® Core™ i3-1215U Processor	8GB	SSD 256GB
7	EPC-S1762A	Intel® Core™ i5-1235U Processor	8GB	SSD 256GB
8	EPC-S1762A	Intel® Core™ i7-1250U Processor	8GB	SSD 256GB

► I/O Port

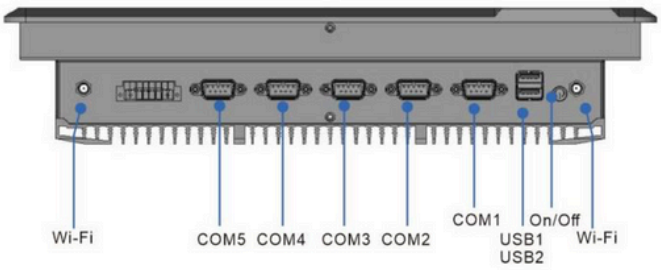

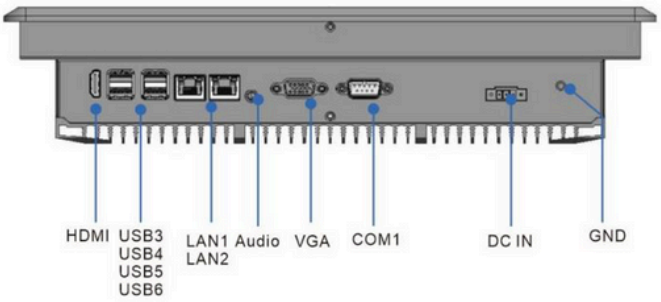

► Product Images

► Product Sizes

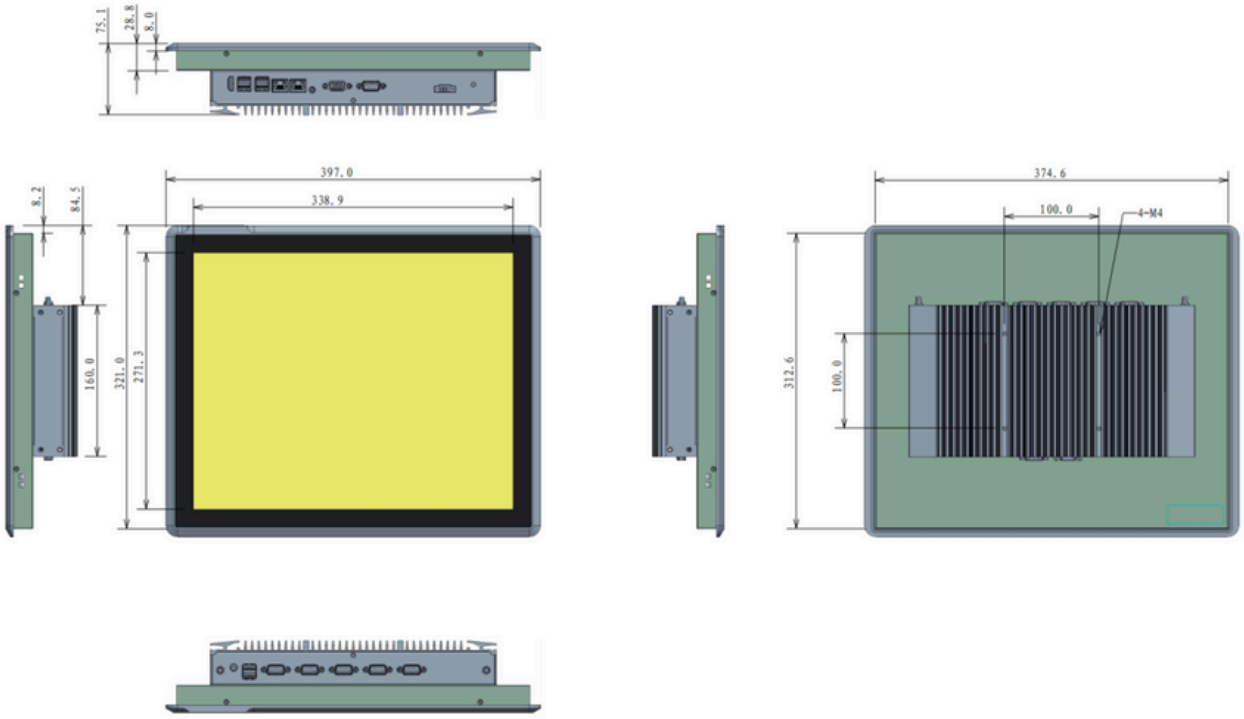

► Applications

The EPC series is designed for various industrial applications including:

• Industrial Automation Systems	• Digital Signage Solutions
• Manufacturing Process Control	• Smart Factory Implementation
• Building Management Systems	• Quality Control Systems
• Transportation and Logistics	• Data Acquisition and Monitoring