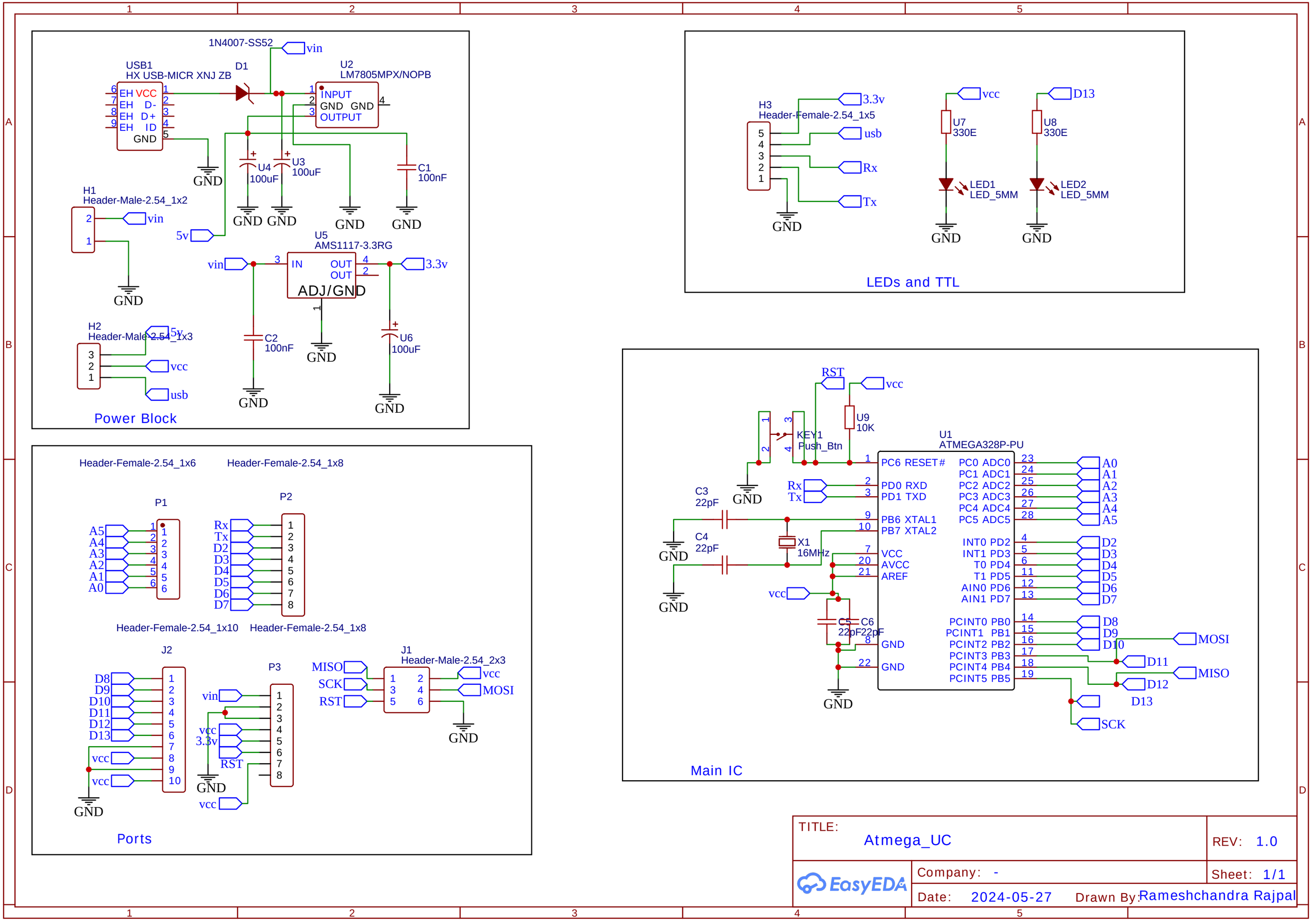

TITLE: Atmega_UC	REV: 1.0
Company: -	Sheet: 1/1
Date: 2024-05-27	Drawn By: Rameshchandra Rajpal

EasyEDA