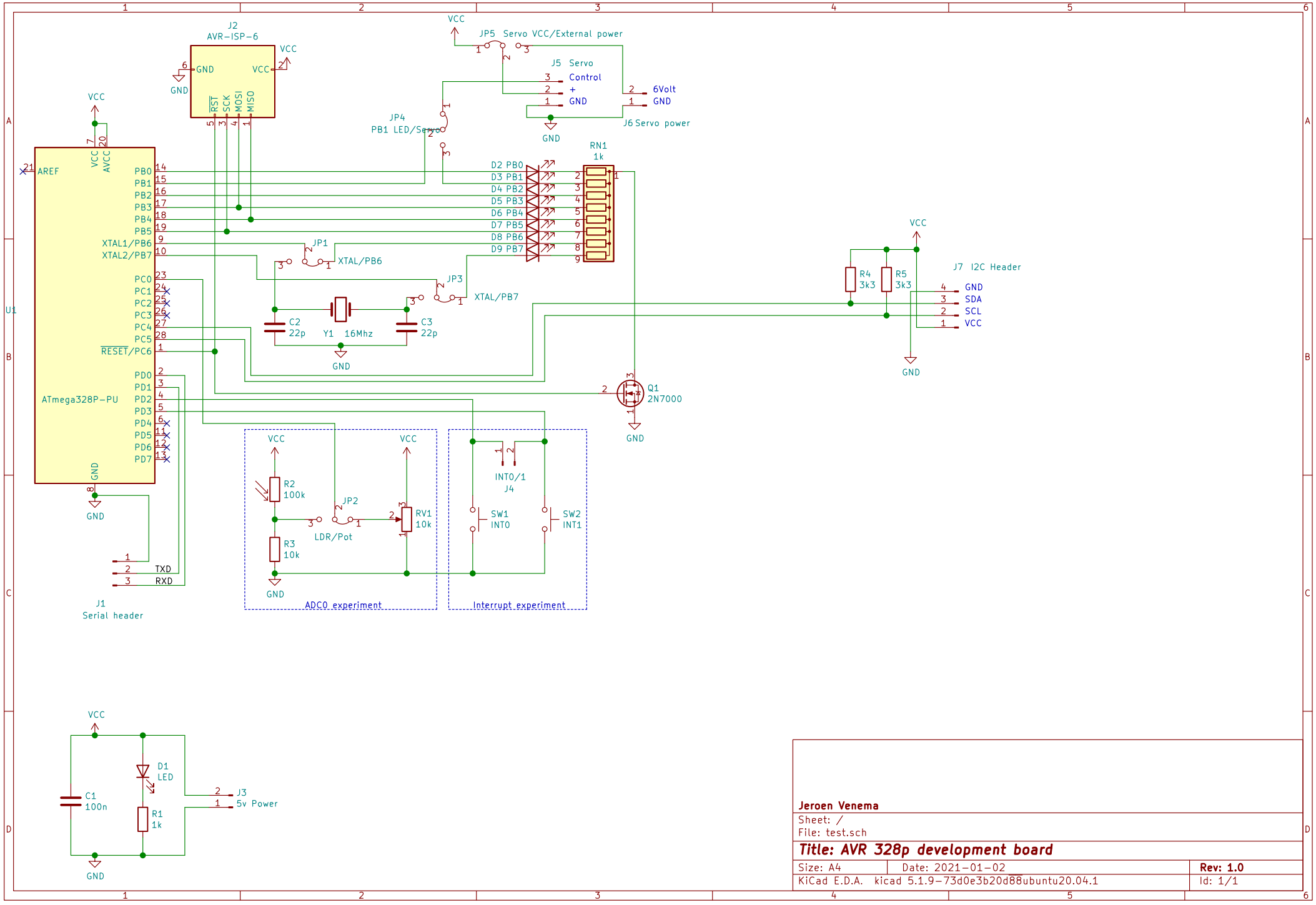

Jeroen Venema

Sheet: /

File: test.sch

Title: AVR 328p development board

Size: A4	Date: 2021-01-02	Rev: 1.0
KiCad E.D.A. kicad 5.1.9-73d0e3b20d88ubuntu20.04.1		Id: 1/1