3141 THRU 3144

Data Sheet 27621.6B*

SENSITIVE HALL-EFFECT SWITCHES FOR HIGH-TEMPERATURE OPERATION

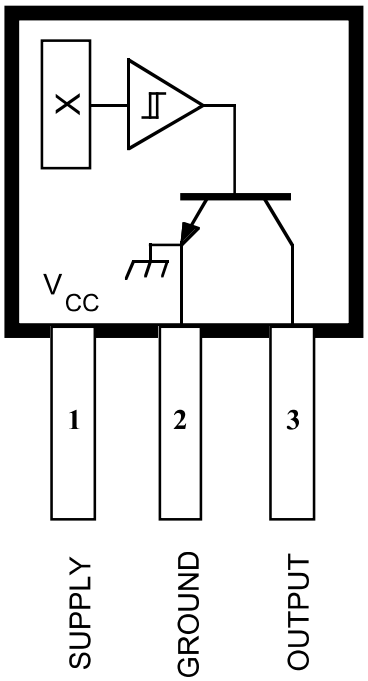

Dwg. PH-003A

Pinning is shown viewed from branded side.

ABSOLUTE MAXIMUM RATINGS at T_A = +25°C

Supply Voltage, V_{CC} ..... **28 V**

Reverse Battery Voltage, V_{RCC} ..... **-35 V**

Magnetic Flux Density, B ..... **Unlimited**

Output OFF Voltage, V_{OUT} ..... **28 V**

Reverse Output Voltage, V_{OUT} ..... **-0.5 V**

Continuous Output Current, I_{OUT} ..... **25 mA**

Operating Temperature Range, T_A

Suffix 'E–' ..... **-40°C to +85°C**

Suffix 'L–' ..... **-40°C to +150°C**

Storage Temperature Range,

T_S ..... **-65°C to +170°C**

These Hall-effect switches are monolithic integrated circuits with tighter magnetic specifications, designed to operate continuously over extended temperatures to +150°C, and are more stable with both temperature and supply voltage changes. The unipolar switching characteristic makes these devices ideal for use with a simple bar or rod magnet. The four basic devices (3141, 3142, 3143, and 3144) are identical except for magnetic switch points.

Each device includes a voltage regulator for operation with supply voltages of 4.5 to 24 volts, reverse battery protection diode, quadratic Hall-voltage generator, temperature compensation circuitry, small-signal amplifier, Schmitt trigger, and an open-collector output to sink up to 25 mA. With suitable output pull up, they can be used with bipolar or CMOS logic circuits. The A3141– and A3142– are improved replacements for the UGN/UGS3140–; the A3144– is the improved replacement for the UGN/UGS3120–.

The first character of the part number suffix determines the device operating temperature range. Suffix 'E–' is for the automotive and industrial temperature range of -40°C to +85°C. Suffix 'L–' is for the automotive and military temperature range of -40°C to +150°C. Three package styles provide a magnetically optimized package for most applications. Suffix '–LT' is a miniature SOT89/TO-243AA transistor package for surface-mount applications; suffix '–UA' is a three-lead ultra-mini-SIP.

FEATURES and BENEFITS

- Superior Temp. Stability for Automotive or Industrial Applications
- 4.5 V to 24 V Operation … Needs Only An Unregulated Supply
- Open-Collector 25 mA Output … Compatible with Digital Logic
- Reverse Battery Protection
- Activate with Small, Commercially Available Permanent Magnets
- Solid-State Reliability
- Small Size
- Resistant to Physical Stress

Always order by complete part number, e.g., **A3141ELT** .

Allegro MicroSystems, Inc.

3141 THRU 3144
SENSITIVE HALL-EFFECT SWITCHES FOR HIGH-TEMP. OPERATION

FUNCTIONAL BLOCK DIAGRAM

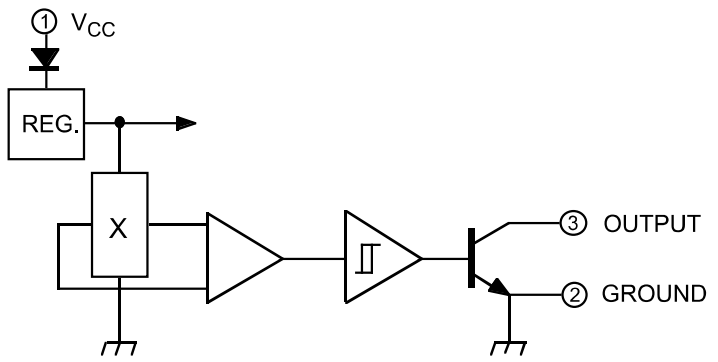

Dwg. FH-005-2

ELECTRICAL CHARACTERISTICS at V_{CC} = 8 V over operating temperature range.

Characteristic	Symbol	Test Conditions	Limits			
			Min.	Typ.	Max.	Units
Supply Voltage	V_{CC}	Operating	4.5	—	24	V
Output Saturation Voltage	$V_{OUT(SAT)}$	I_{OUT} = 20 mA, B > B_{OP}	—	175	400	mV
Output Leakage Current	I_{OFF}	V_{OUT} = 24 V, B < B_{RP}	—	<1.0	10	µA
Supply Current	I_{CC}	B < B_{RP} (Output OFF)	—	4.4	9.0	mA
Output Rise Time	t_r	R_L = 820 Ω, C_L = 20 pF	—	0.04	2.0	µs
Output Fall Time	t_f	R_L = 820 Ω, C_L = 20 pF	—	0.18	2.0	µs

MAGNETIC CHARACTERISTICS in gauss over operating supply voltage range.

Characteristic		Part Numbers*											
		A3141–			A3142–			A3143–			A3144–		
		Min.	Typ.	Max.	Min.	Typ.	Max.	Min.	Typ.	Max.	Min.	Typ.	Max.
B_{OP}	at T_A = 25°C	50	100	160	130	180	230	220	280	340	70	—	350
	over operating temp. range	30	100	175	115	180	245	205	280	355	35	—	450
B_{RP}	at T_A = 25°C	10	45	130	75	125	175	165	225	285	50	—	330
	over operating temp. range	10	45	145	60	125	190	150	225	300	25	—	430
B_{hys}	at T_A = 25°C	20	55	80	30	55	80	30	55	80	20	55	—
	over operating temp. range	20	55	80	30	55	80	30	55	80	20	55	—

NOTES: Typical values are at T_A = +25°C and V_{CC} = 8 V.
B_{OP} = operate point (output turns ON); B_{RP} = release point (output turns OFF); B_{hys} = hysteresis (B_{OP} - B_{RP}).
1 gauss (G) is exactly equal to 0.1 millitesla (mT).
*Complete part number includes a suffix to identify operating temperature range (E- or L-) and package type (-LT or -UA).

Allegro MicroSystems, Inc.
115 Northeast Cutoff, Box 15036
Worcester, Massachusetts 01615-0036 (508) 853-5000

Copyright © 1993, 2002 Allegro MicroSystems, Inc.

TYPICAL OPERATING CHARACTERISTICS

A3142– SWITCH POINTS

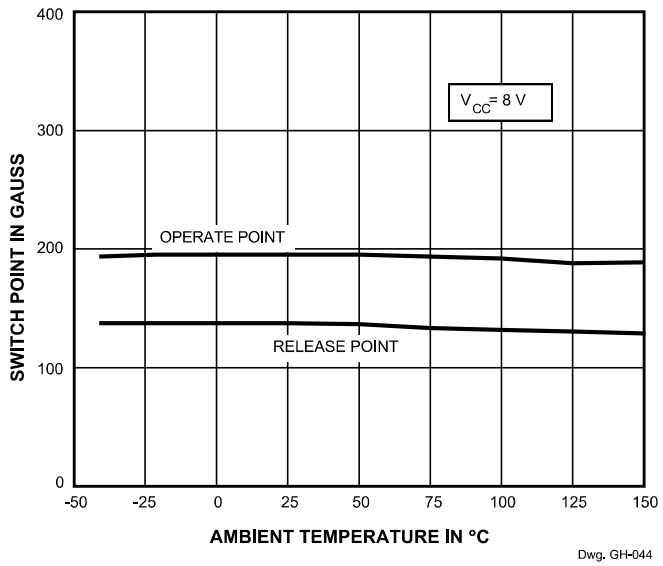

OUTPUT SATURATION VOLTAGE

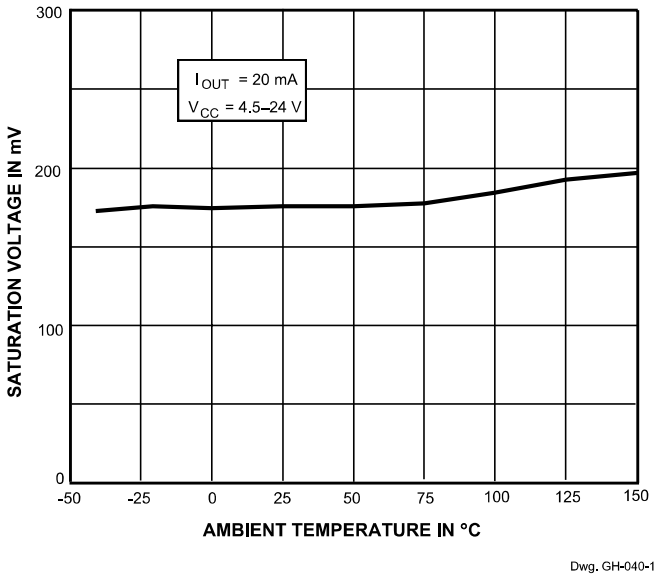

SUPPLY CURRENT

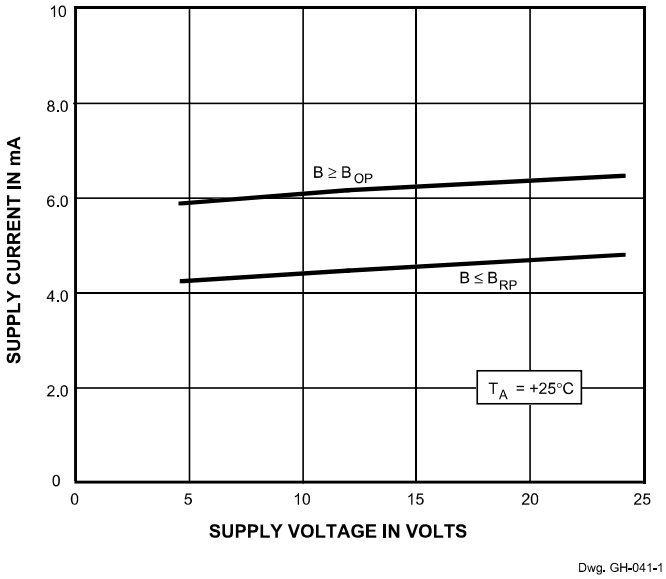

SUPPLY CURRENT

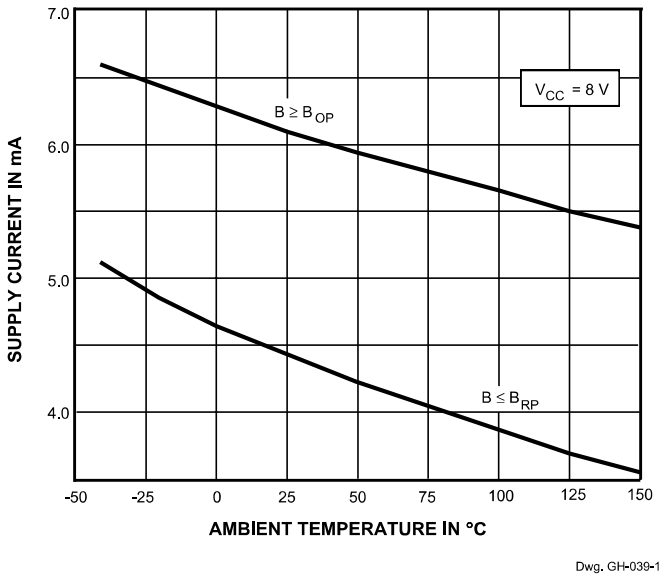

* Complete part number includes a suffix denoting operating temperature range (E- or L-) and package type (-LT, -U, or -UA).

3141 THRU 3144
SENSITIVE HALL-EFFECT SWITCHES FOR HIGH-TEMP. OPERATION

SENSOR LOCATIONS

(±0.005" [0.13 mm] die placement)

Suffix "LT"

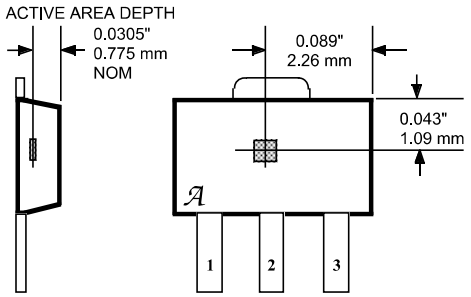

Dwg. MH-008-2D

Suffix "UA"

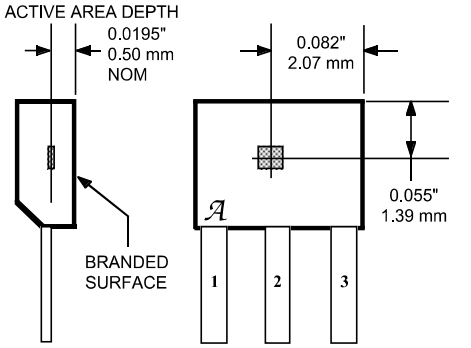

Dwg. MH-011-10A

TYPICAL OPERATING CHARACTERISTICS (cont.)

CHANGE IN OPERATE POINT

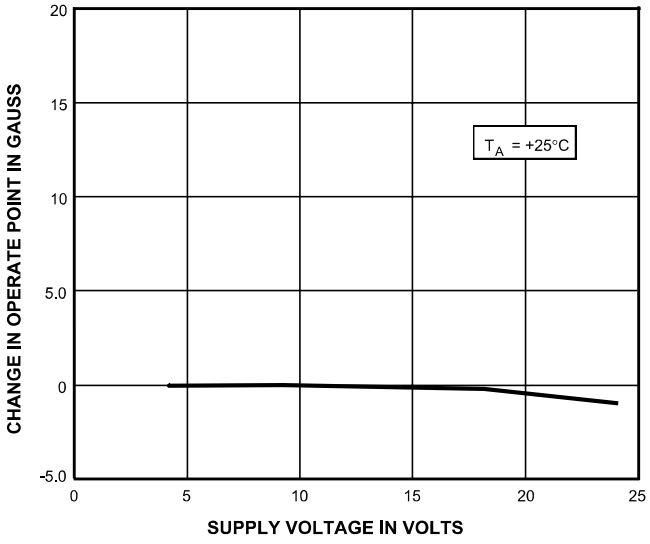

Dwg. GH-042-1

OPERATION

The output of these devices (pin 3) switches low when the magnetic field at the Hall sensor exceeds the operate point threshold (B_{OP}). At this point, the output voltage is $V_{OUT(SAT)}$. When the magnetic field is reduced to below the release point threshold (B_{RP}), the device output goes high. The difference in the magnetic operate and release points is called the hysteresis (B_{hys}) of the device. This built-in hysteresis allows clean switching of the output even in the presence of external mechanical vibration and electrical noise.

Extensive applications information for Hall-effect sensors is available in:

- *Hall-Effect IC Applications Guide*, Application Note 27701;
- *Hall-Effect Devices: Soldering, Gluing, Potting, Encapsulating, and Lead Forming*, Application Note 27703.1;
- *Soldering of Through-Hole Hall-Sensor Dervices*, Application Note 27703; and
- *Soldering of Surface-Mount Hall-Sensor Devices*, Application Note 27703.2.

All are provided in *Allegro Electronic Data Book*, AMS-702. or at

www.allegromicro.com

Allegro MicroSystems, Inc.

115 Northeast Cutoff, Box 15036
Worcester, Massachusetts 01615-0036 (508) 853-5000

PACKAGE DESIGNATOR 'LT'
(SOT89/TO-243AA)

Dimensions in Inches
(for reference only)

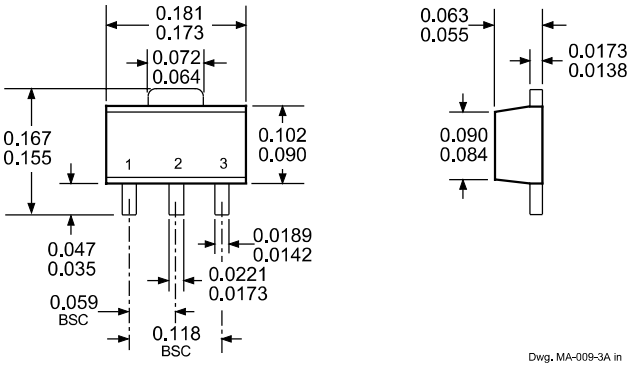

Dimensions in Millimeters
(controlling dimensions)

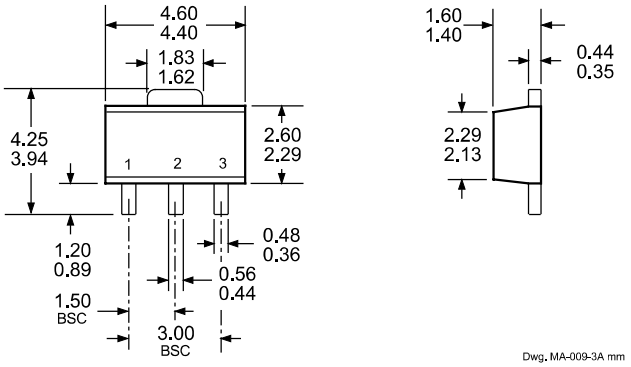

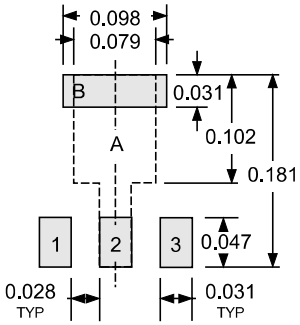

Pads 1, 2, 3, and A — Standard SOT89 Layout
Pads 1, 2, 3, and B — Low-Stress Version
Pads 1, 2, and 3 only — Lowest Stress, But Not Self Aligning

Dwg. MA-012-3 in

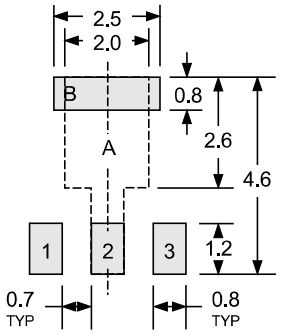

Pads 1, 2, 3, and A — Standard SOT89 Layout
Pads 1, 2, 3, and B — Low-Stress Version
Pads 1, 2, and 3 only — Lowest Stress, But Not Self Aligning

Dwg. MA-012-3 mm

NOTES: 1. Exact body and lead configuration at vendor's option within limits shown.
2. Supplied in bulk pack (500 pieces per bag) or add "TR" to part number for tape and reel.
3. Only low-temperature (≤240°C) reflow-soldering techniques are recommended for SOT89 devices.

3141 THRU 3144
SENSITIVE HALL-EFFECT SWITCHES FOR HIGH-TEMP. OPERATION

PACKAGE DESIGNATOR 'UA'

Dimensions in Inches
(controlling dimensions)

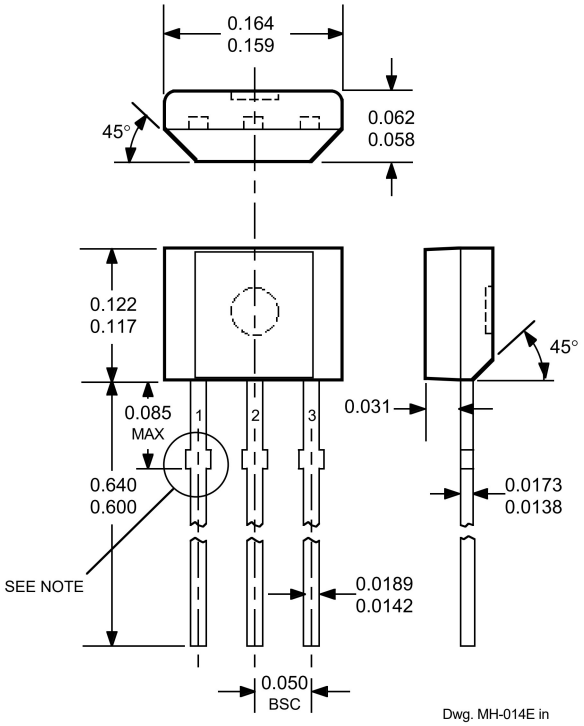

Dimensions in Millimeters
(for reference only)

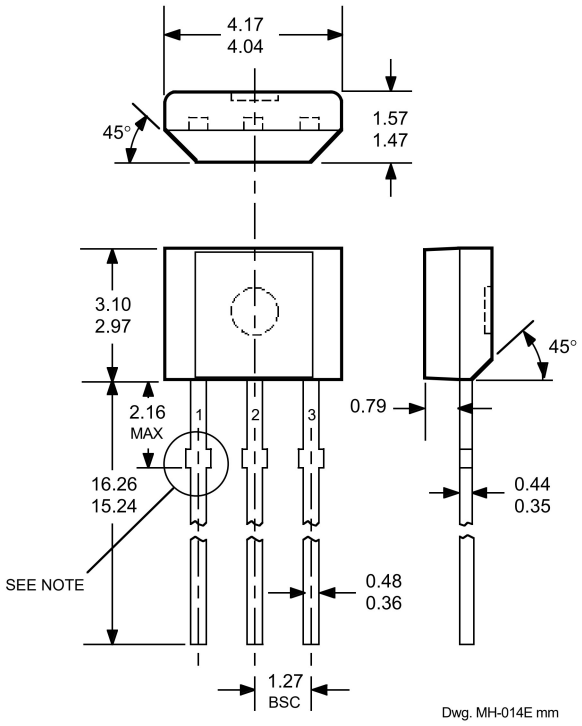

NOTES:
1. Tolerances on package height and width represent allowable mold offsets. Dimensions given are measured at the widest point (parting line).
2. Exact body and lead configuration at vendor's option within limits shown.
3. Height does not include mold gate flash.
4. Recommended minimum PWB hole diameter to clear transition area is 0.035" (0.89 mm).
5. Where no tolerance is specified, dimension is nominal.
6. Supplied in bulk pack (500 pieces per bag).

Radial Lead Form (order A314xxUA-LC)

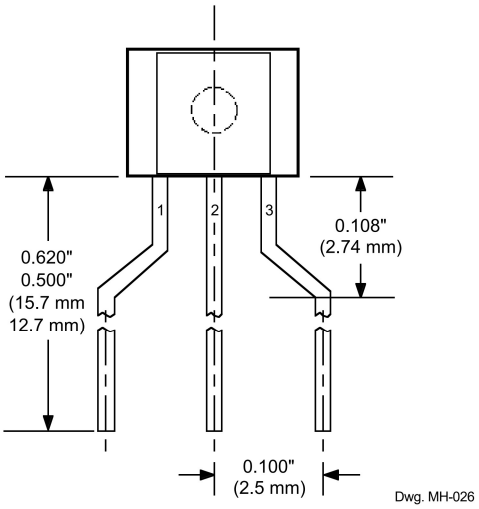

NOTE: Lead-form dimensions are the nominals produced on the forming equipment. No dimensional tolerance is implied or guaranteed for bulk packaging (500 pieces per bag).

Allegro MicroSystems, Inc.
115 Northeast Cutoff, Box 15036
Worcester, Massachusetts 01615-0036 (508) 853-5000

3141 THRU 3144
SENSITIVE HALL-EFFECT SWITCHES FOR HIGH-TEMP. OPERATION

HALL-EFFECT SENSORS

UNIPOLAR HALL-EFFECT DIGITAL SWITCHES

Partial Part Number	Operate Point (G)	Release Point (G)	Hysteresis (G)	Oper. Temp.	Packages	Replaces and Comments
	Over Oper. Voltage & Temp. Range					
A3121x	220 to 500	80 to 410	60 to 150	E, L	LT, UA	3019, 3113, 3119
A3122x	260 to 430	120 to 360	70 to 140	E, L	LT, UA	
A3123x	230 to 470	160 to 330	70 to 140	E, L	LT, UA	
A3141x	30 to 175	10 to 145	20 to 80	E, L	LT, UA	3040, 3140
A3142x	115 to 245	60 to 190	30 to 80	E, L	LT, UA	
A3143x	205 to 355	150 to 300	30 to 80	E, L	LT, UA	
A3144x	35 to 450	25 to 430	>20	E, L	LT, UA	3020, 3120
A3161E	<160 (Typ 130)	>30 (Typ 110)	5 to 80	E	LT, UA	2-wire operation
A3163E	<160 (Typ 98)	>30 (Typ 79)	5 to 40	E	LT, UA	2-wire
A3240x	<50 (Typ 35)	>5 (Typ 25)	Typ 10	E, L	LH, LT, UA	chopper stabilized
A3250x	<50 to >350	_	5 to 35	J, L	UA	programmable, chopper stabilized
A3251x	<50 to >350	_	5 to 35	J, L	UA	programmable, chopper stabilized
A3361E	<125	>40	5 to 30	E	LH, LT, UA	2-wire, chopper stabilized, output normally high
A3362E	<125	>40	5 to 30	E	LH, LT, UA	2-wire, chopper stabilized, output normally low

MICROPOWER OMNIPOLAR HALL-EFFECT DIGITAL SWITCHES

Partial Part Number	Operate Points (G)	Release Points (G)	Hysteresis (G)	Oper. Temp.	Packages	Average Supply Current (μA)
	Over Oper. Voltage & Temp. Range					
A3209E	>-60, <60	<-5, >5	Typ 7.7	E	LH, UA	<425 (Typ 145)
A3210E	>-60, <60	<-5, >5	Typ 7.7	E	LH, UA	<60 (Typ 8.8)
A3212E	>-55, <55	<-10, >10	Typ. 8	E	LH, UA	<10 (Typ 4.2)

BIPOLAR HALL-EFFECT DIGITAL SWITCHES

Partial Part Number	Operate Point (G)	Release Point (G)	Hysteresis (G)	Oper. Temp.	Packages	Replaces and Comments
	Over Oper. Voltage & Temp. Range					
UGx3132	<95 (Typ 32)	>-95 (Typ -20)	>30 (Typ 52)	K, L, S	LT, UA	3030, 3130, 3131
UGx3133	<75 (Typ 32)	>-75 (Typ -20)	>30 (Typ 52)	K, L, S	LT, UA	
UGx3134	-40 to 50	-50 to 40	5 to 55	E, L	LT, UA	
A3260x	<30 (Typ 10)	>-30 (Typ -10)	Typ 20	E, L	LH, LT, UA	2 wire, chopper stabilized

Notes: 1) Typical data is at T_A = +25°C and nominal operating voltage.
2) "x" = Operating Temperature Range [suffix letter or (prefix)]: S (UGN) = -20°C to +85°C, E = -40°C to +85°C, J = -40°C to +115°C, K (UGS) = -40°C to +125°C, L (UGL) = -40°C to +150°C.

3141 THRU 3144
SENSITIVE HALL-EFFECT SWITCHES FOR HIGH-TEMP. OPERATION

The products described herein are manufactured under one or more of the following U.S. patents: 5,045,920; 5,264,783; 5,442,283; 5,389,889; 5,581,179; 5,517,112; 5,619,137; 5,621,319; 5,650,719; 5,686,894; 5,694,038; 5,729,130; 5,917,320; and other patents pending.

Allegro MicroSystems, Inc. reserves the right to make, from time to time, such departures from the detail specifications as may be required to permit improvements in the performance, reliability, or manufacturability of its products. Before placing an order, the user is cautioned to verify that the information being relied upon is current.

Allegro products are not authorized for use as critical components in life-support appliances, devices, or systems without express written approval.

The information included herein is believed to be accurate and reliable. However, Allegro MicroSystems, Inc. assumes no responsibility for its use; nor for any infringements of patents or other rights of third parties that may result from its use.

Allegro® MicroSystems, Inc.

115 Northeast Cutoff, Box 15036
Worcester, Massachusetts 01615-0036 (508) 853-5000