STM32 Crystal Clock

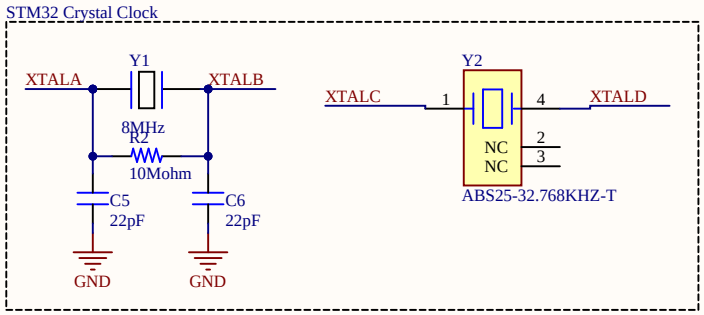

LED's

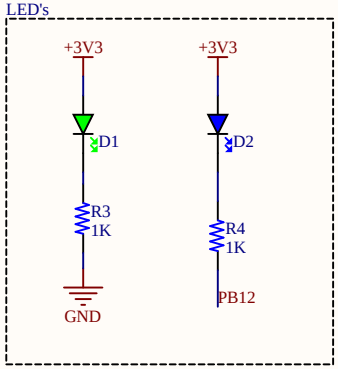

Reset

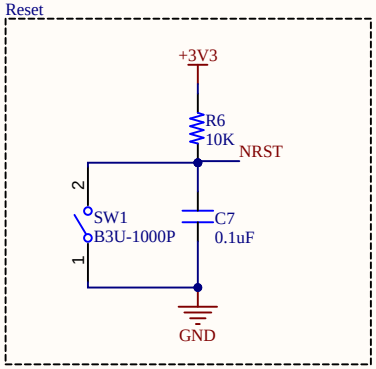

CAN Transciever

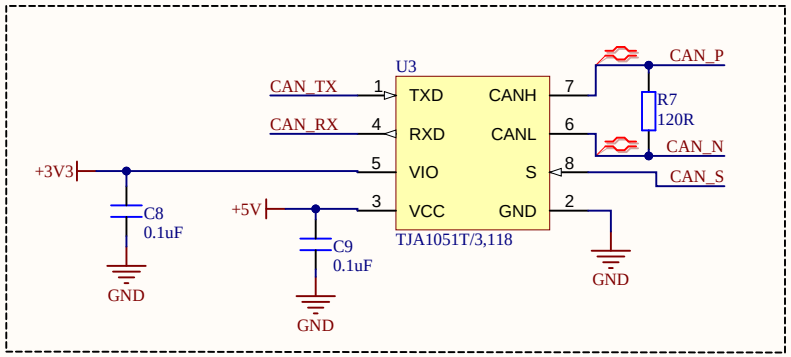

STM32 Crystal Clock

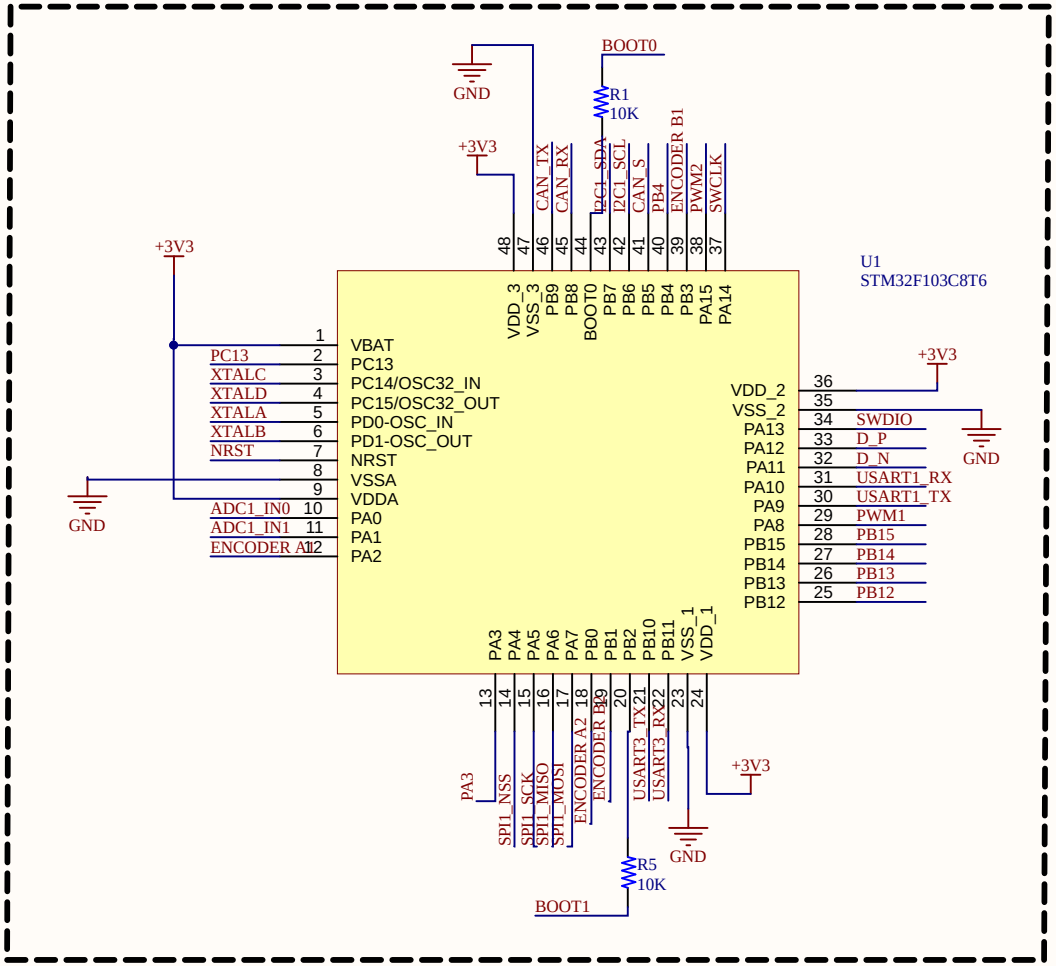

Title		
Size: A4	Number	Revision
Date: 3/13/2025	Sheet of	
File: D:\Users\..\[1]-Controller_Page.SchDoc	Drawn By:	

SPI Pins

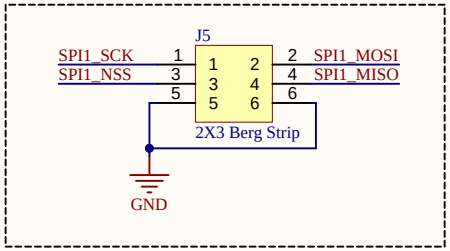

I2C Pins

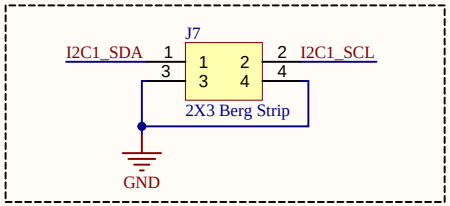

CAN Pins

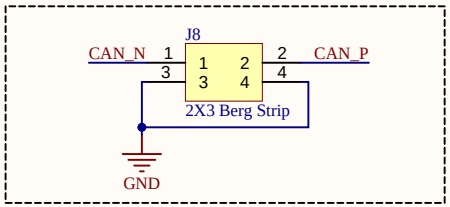

USART Pins

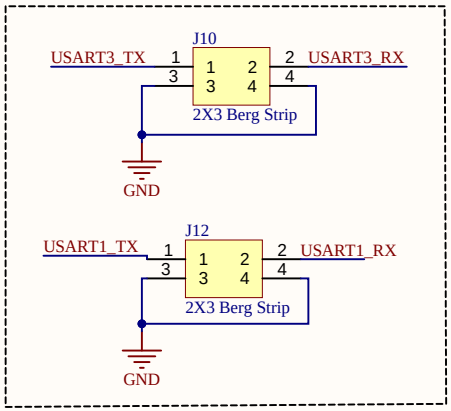

Generic Pins

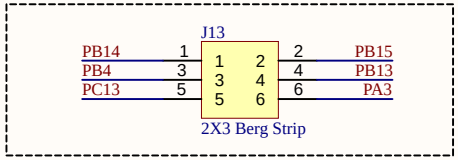

Encoder Pins

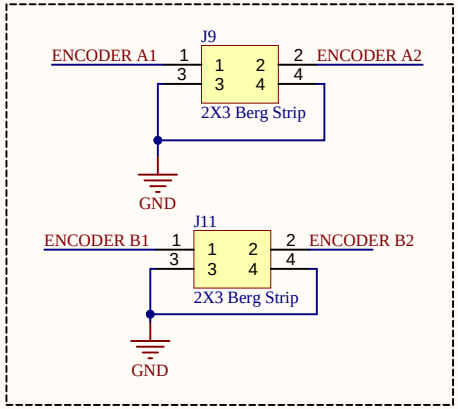

ADC Pins

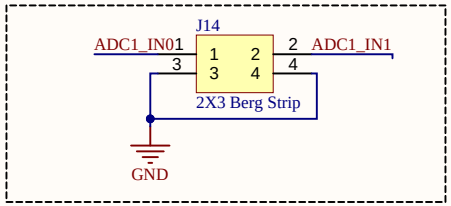

PWM Pins

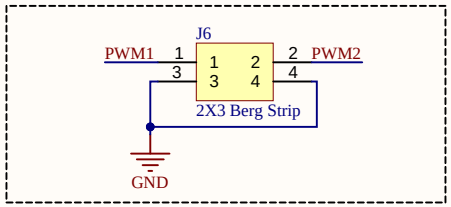

Power Pins

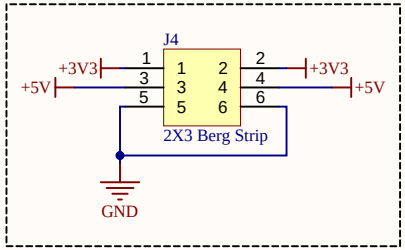

Programming/Debug Pins

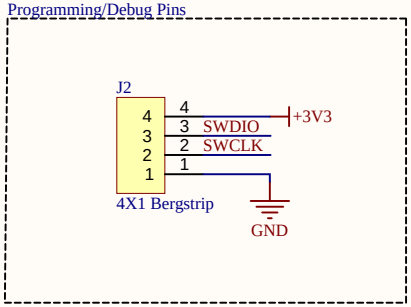

BOOT0 BOOT1 Jumpers

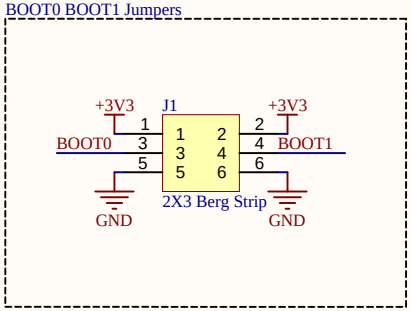

Title		
Size: A4	Number	Revision
Date: 3/13/2025	Sheet of	
File: D:\Users\..\[2]- Connector_Page.SchDoc	Drawn By:	

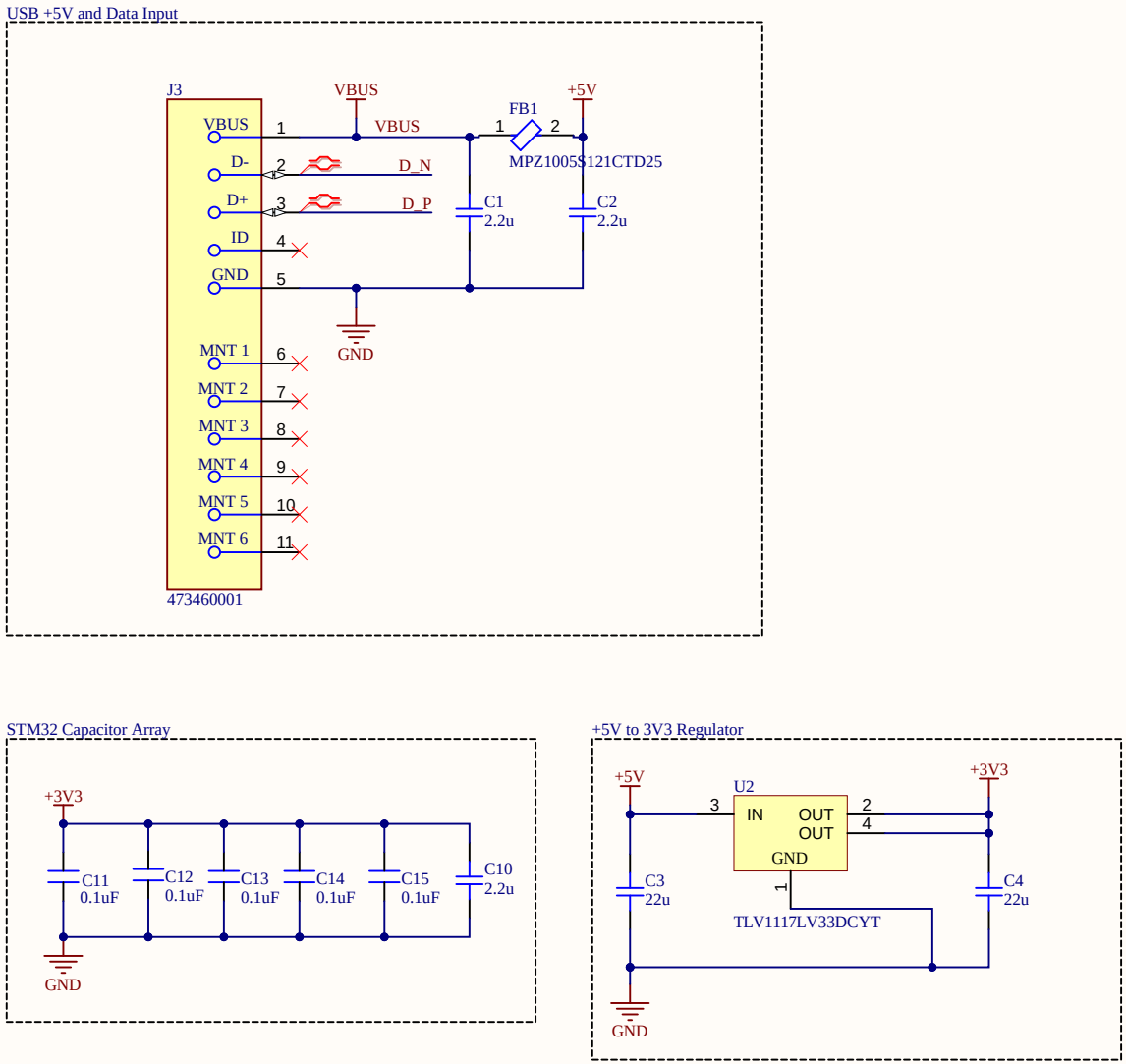
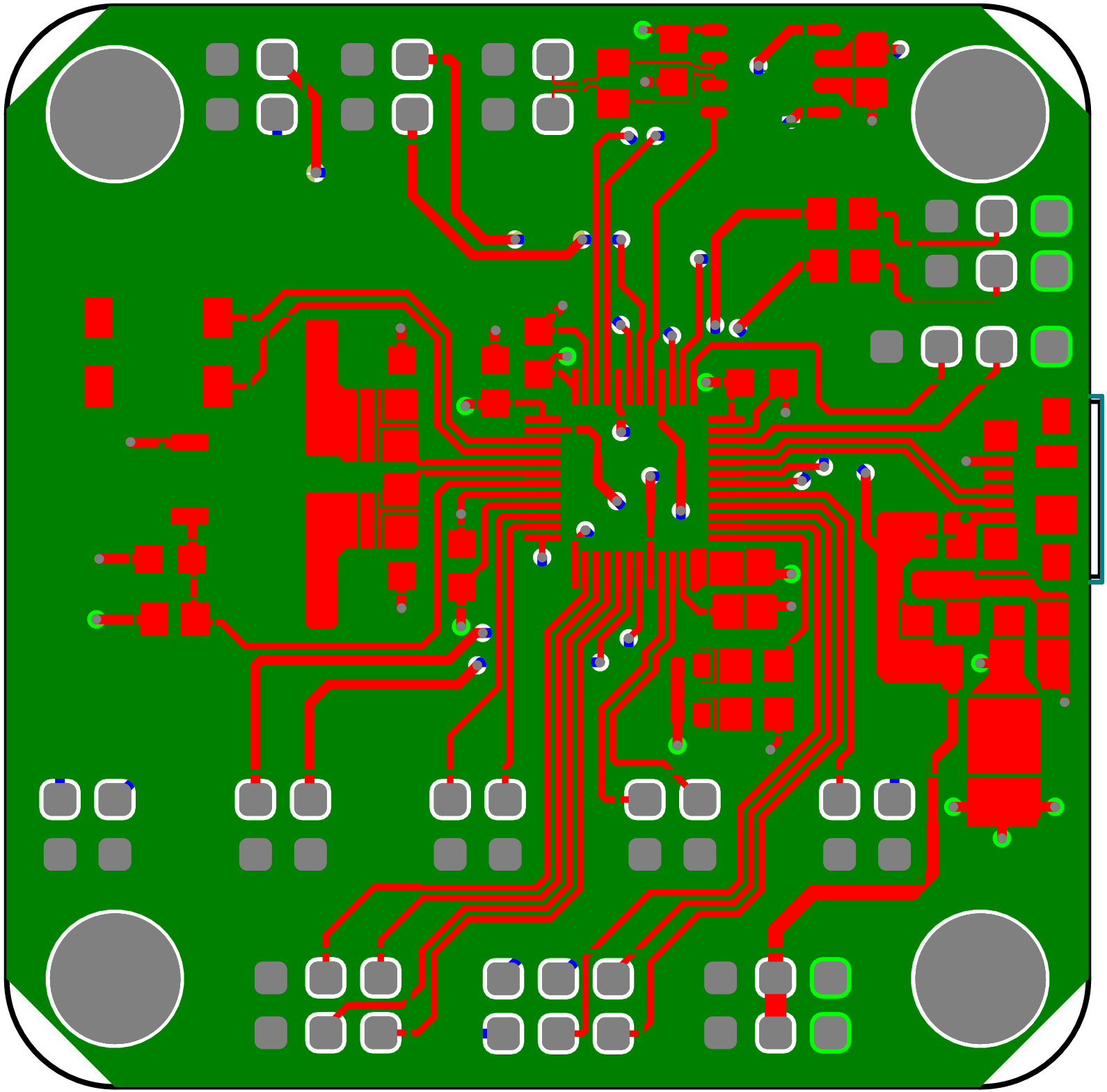
Title		
Size A4	Number	Revision
Date: 3/13/2025		Sheet of
File: D:\Users\..\[3]-PowerIN_Page.SchDoc		Drawn By: