Building a Steel City Fixie

A Step-by-Step Frame Building Guide

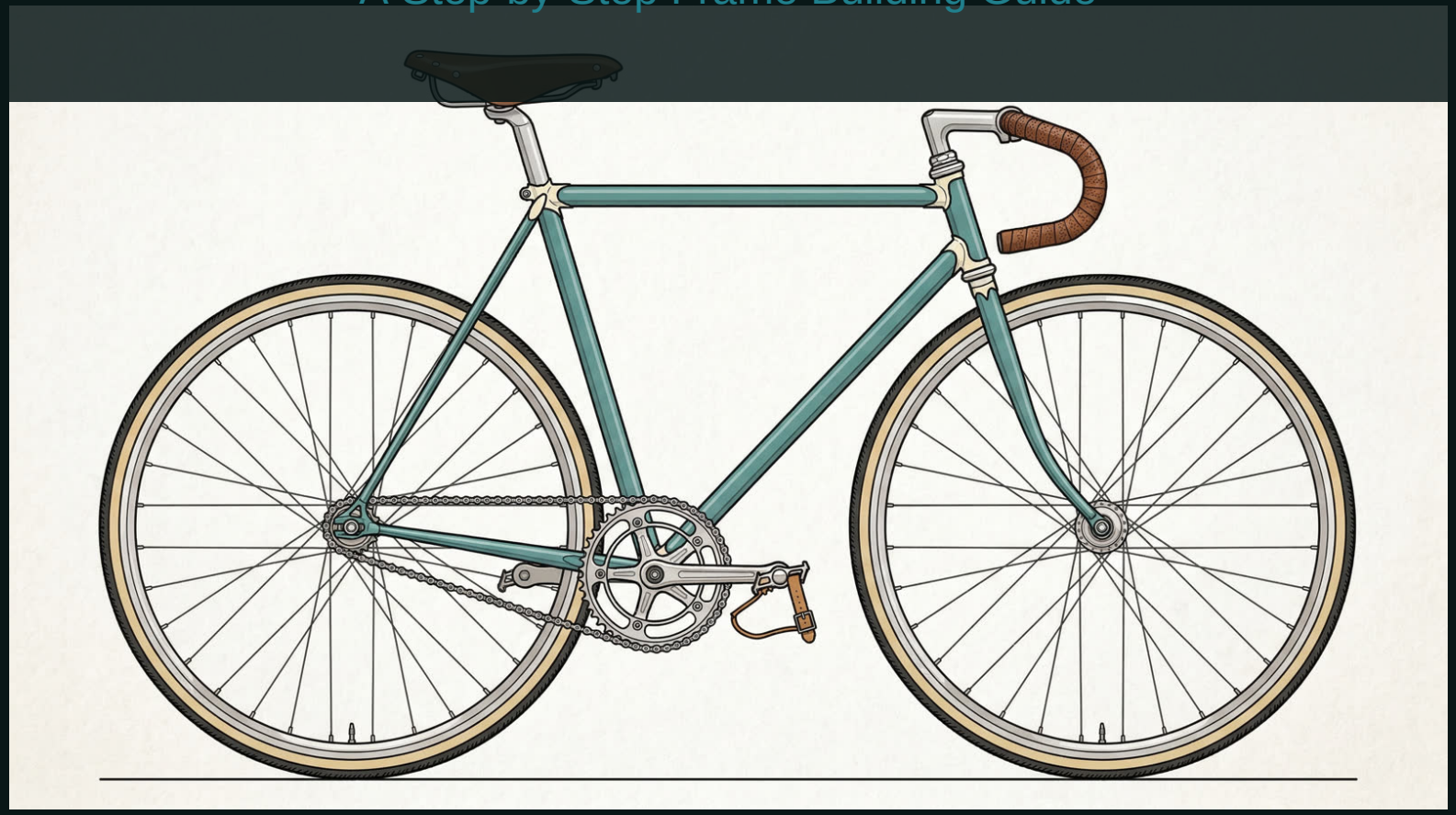

Neo-Retro Road Aesthetic • Skinny Steel Tubes • City Fixed-Gear

Before You Start

Who This Is For

- A first-time frame builder comfortable with basic metal-shop tools who wants to build one steel city frame.
- No prior framebuilding experience required, but willingness to practice cutting and welding on scrap before touching real frame tubes.
- The goal is a safe, slightly overbuilt prototype — not the lightest or fanciest frame.

Three Phases

- 1. Practice on scrap steel tubes
- 2. Build the frame in the jig
- 3. Ride, inspect, and refine

Safety & Skills Checklist

- Eye protection, hearing protection, welding gloves, and respirator for all grinding and welding.
- Ventilated workspace for welding/brazing and grinding. Keep fire safety gear nearby.
- Practice beads on flat plate, then butt joints on thin tube before starting the frame.
- Can you safely use an angle grinder, drill press, and basic measuring tools?
- Consider a short welding class or having a local welder check your first joints.

"Version 1 prioritizes safe, slightly overbuilt construction so we can ride hard, learn, and adjust before chasing grams."

1 Concept Overview

This project is a skinny-tubed steel city bike inspired by classic 60s-80s road frames. It runs as a fixed-gear or singlespeed, with clean lines and a slightly nostalgic look, but is meant for everyday urban riding rather than the velodrome.

The goal is a lively, comfortable frame that feels familiar to road riders while being simple, durable, and easy to live with in the city.

- City fixed-gear with neo-retro road aesthetic
- Skinny steel tubes, classic proportions
- Simple drivetrain, practical for urban use
- Goal: one safe, rideable prototype, not perfection.
- Success = you complete the build, it rides straight, and you understand what you'd change next time.

Side view of the finished city fixie: thin steel tubes, classic road-bike proportions, simple drivetrain.

2 Geometry & Fit

The geometry defines how the bike feels on the road: stable vs twitchy, upright vs stretched. For this frame we focus on a balanced, road-influenced city fit: a moderate reach, enough stack for comfortable bars, and conservative angles for predictable handling in traffic.

This guide assumes 700c wheels, a front caliper brake, and track-style or road dropouts suitable for fixed/singlespeed hubs.

- Head tube angle (HTA) and seat tube angle (STA)
- Effective top tube (ETT), chainstay length
- Bottom bracket drop, stack, reach
- Wheelbase and tire clearance

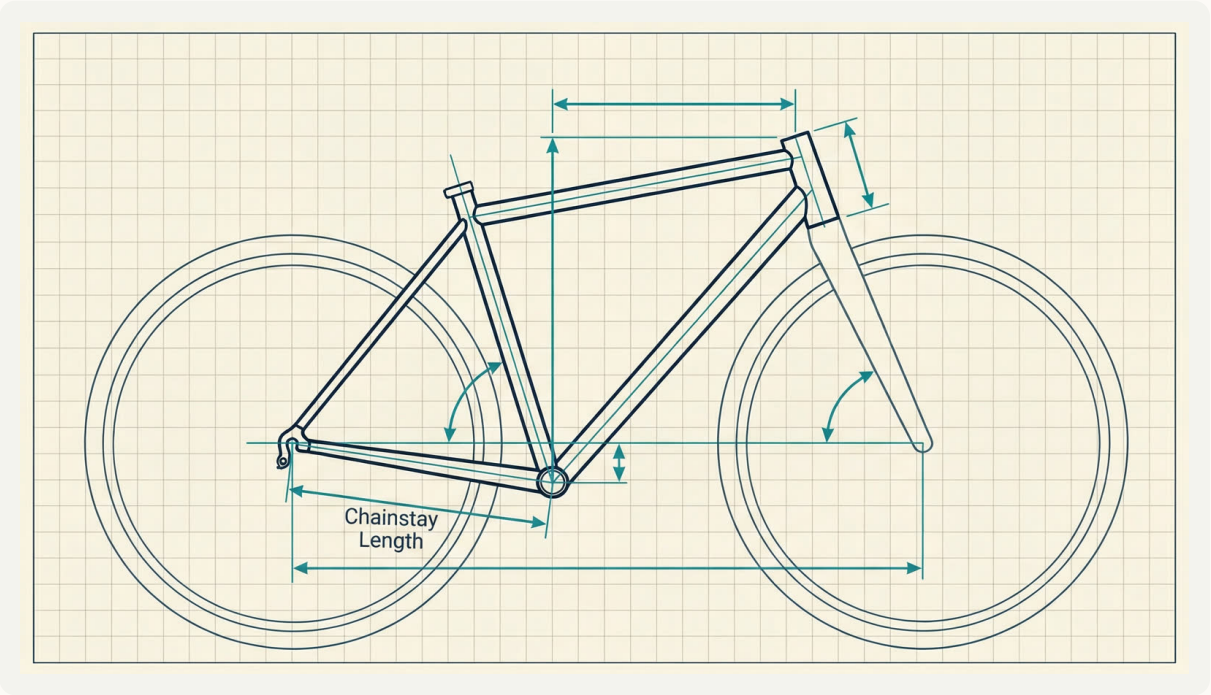

Geometry chart and side view: all key dimensions referenced from the bottom bracket and wheel axles.

3 Tubes, Lugs & Standards

We use a double-butted steel tubeset (e.g. 4130 or Reynolds 725) to get the classic skinny look without sacrificing strength. Tube diameters are kept close to vintage road norms.

All interfaces are defined up front: bottom bracket shell (BSA), head tube and headset type, dropout spacing, brake format, and tire clearance. Locking these early makes the prototype easier to build and future production easier to manufacture.

- Double-butted Cr-Mo steel tubes
- BSA bottom bracket, EC34 head tube
- Track or road dropouts, 700c wheels

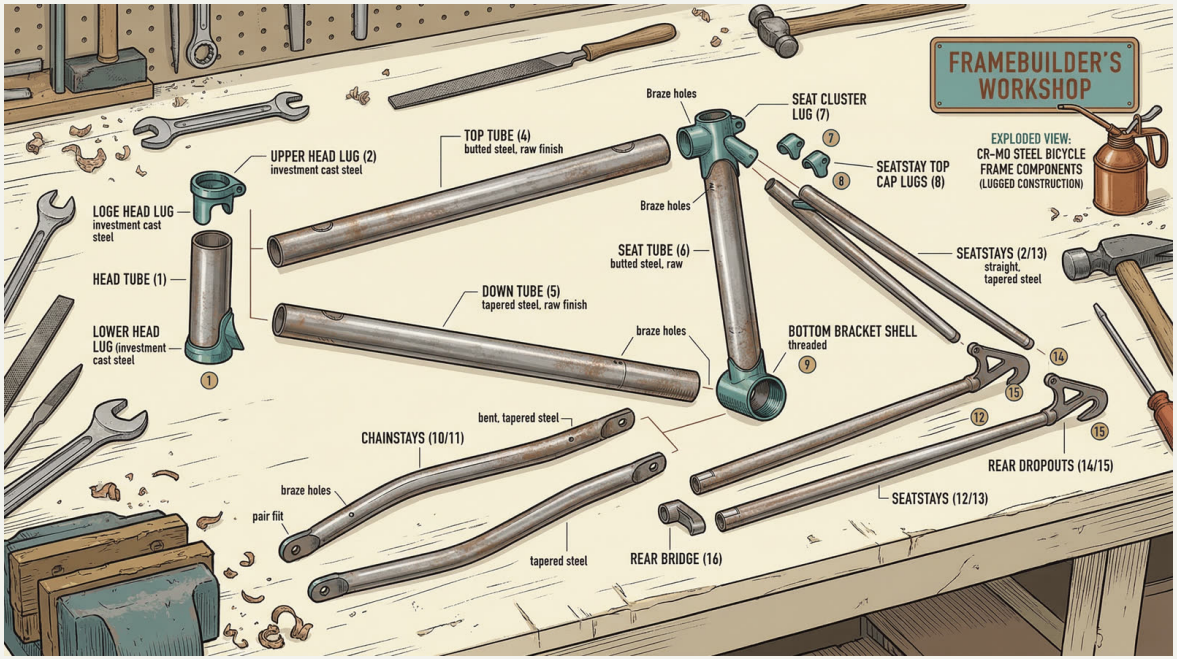

Exploded view: each tube, lug, and interface is specified before any cutting starts.

4 Full-Size Drawing

Before cutting metal, make or print a 1:1 drawing to verify geometry and tube lengths. This can be done on large paper or via CAD.

Lay the actual tubes over the drawing to check lengths, angles, and miter profiles. This catches errors before any material is committed and gives you a physical reference for the entire build.

- Print or draw at 1:1 scale on paper
- Overlay tubes to verify lengths and miters
- Use as ongoing reference throughout the build

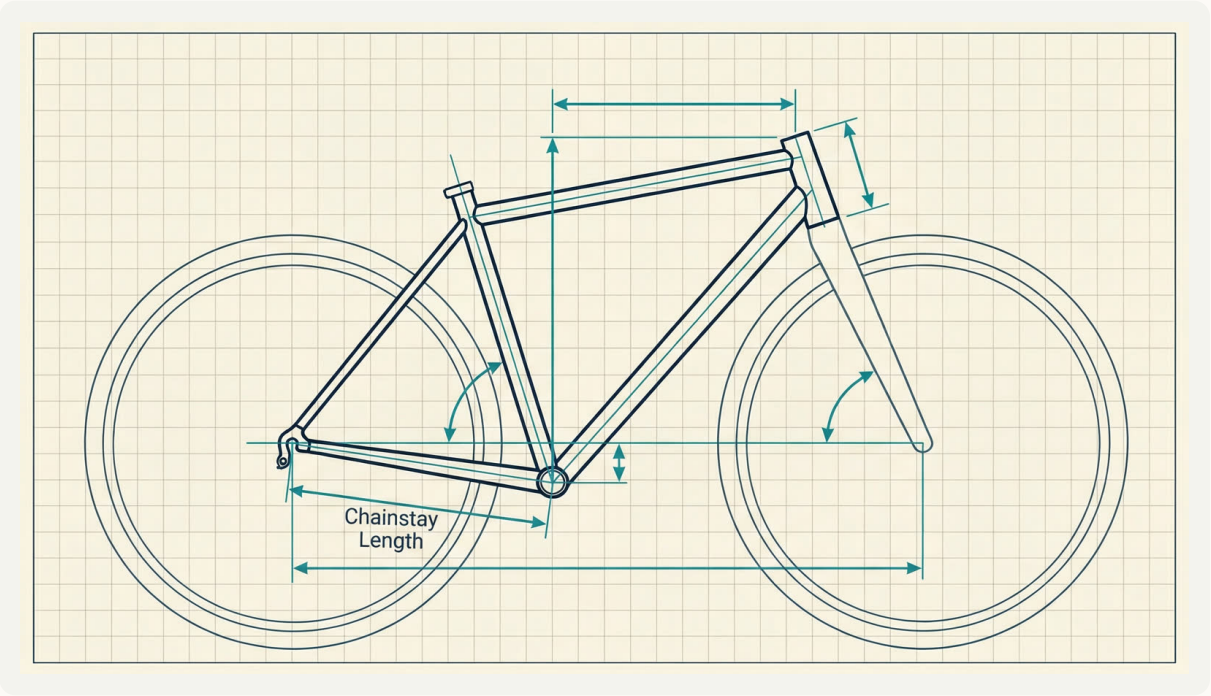

Full-size frame layout with tubes overlaid to verify fit before cutting.

5 Frame Jig & Datums

The jig holds everything in alignment while you tack and weld. The three key datums are the bottom bracket, head tube, and rear axle positions.

Set these three fixtures first, then build around them. You will return to these datums repeatedly to verify alignment throughout the build process.

- Bottom bracket fixture: the primary reference point
- Head tube fixture: sets head angle and position
- Rear axle fixture: defines chainstay length and dropout spacing

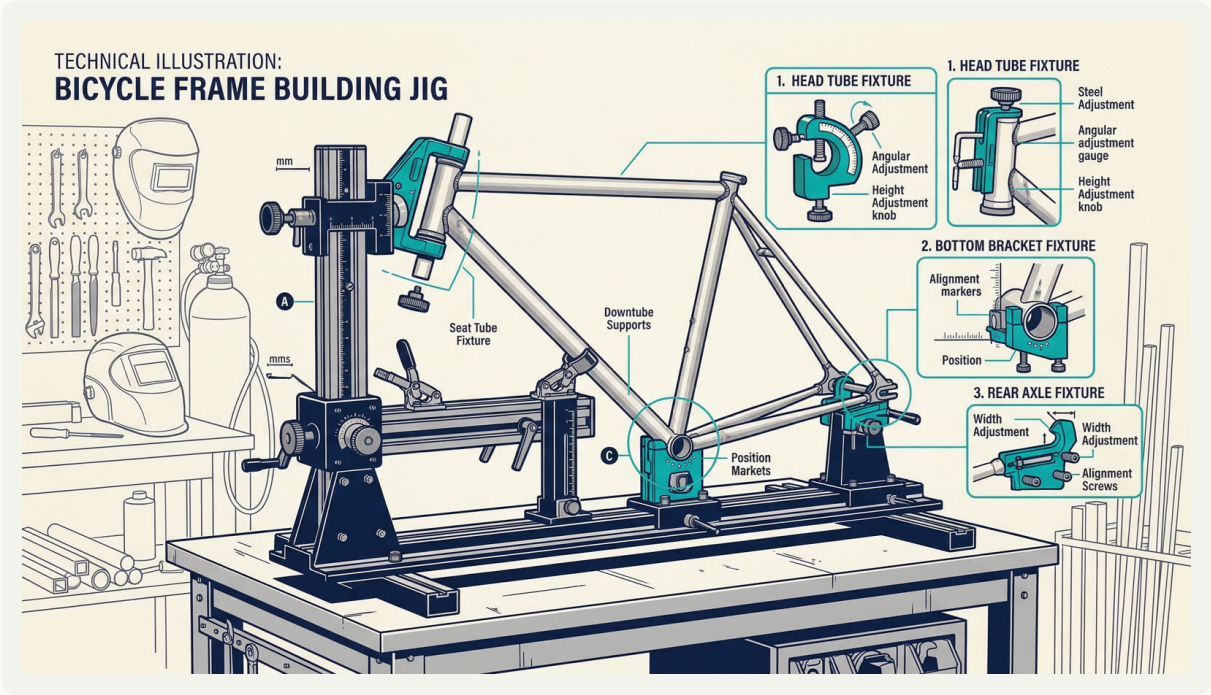

Frame building jig with BB, head tube, and rear axle fixtures highlighted.

6 Tube Prep & Marking

Mark butted zones, cut lines, and miter profiles on each tube so you do not cut into the thicker sections. The butted ends are where the tube walls are reinforced — joints must land in these stronger zones.

Take your time here. Careful marking prevents the most common beginner mistake: cutting past the butt and leaving thin wall at a high-stress junction.

- Identify and mark butted zones on each tube
- Place cut lines so joints land in thicker sections
- Double-check against the full-size drawing

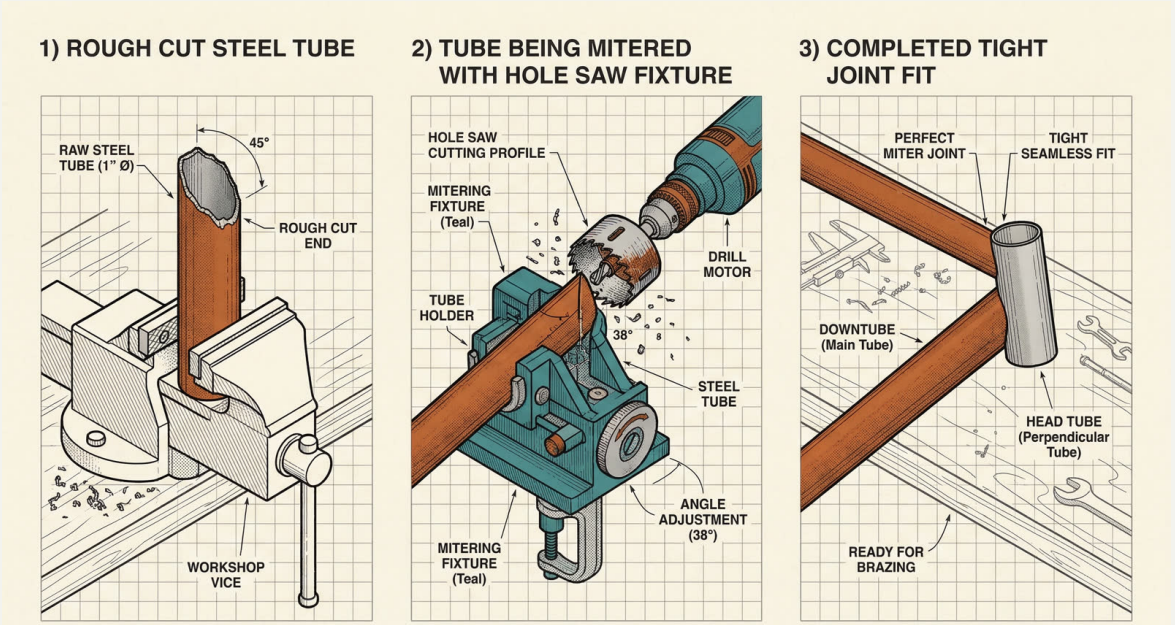

Close-up of tube marking: butts identified, cut lines placed to keep joints in the reinforced zones.

7 Mitering the Main Triangle

Mitering is the process of cutting the tube ends to fit tightly against the adjoining tube. Start with a rough cut, then refine with a hole saw or file until the joint sits flush.

Test-fit each tube against the drawing and then in the jig. A good miter has no visible gaps when held against a bright light.

- Rough cut with hacksaw or cutoff wheel
- Refine with hole saw fixture or half-round file
- Test-fit in jig until joints are flush and tight
- Good miter = no visible light gaps at the joint

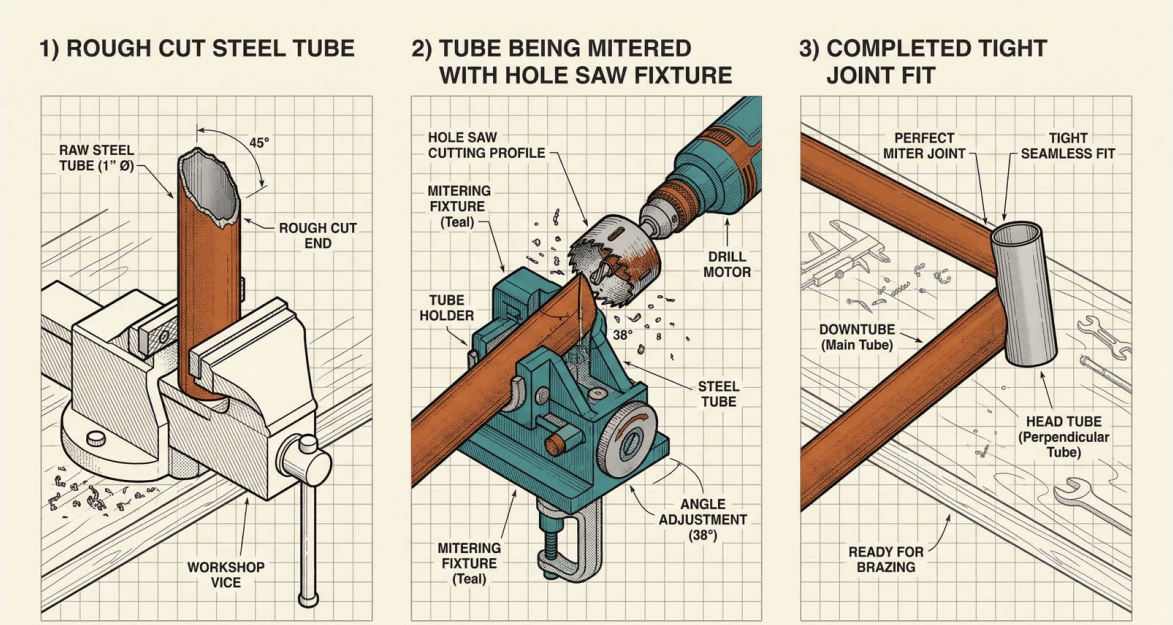

Three-stage mitering: rough cut, hole saw fixture, completed tight joint fit.

TIG Welding for Your First Frame

For this project we use TIG welding to join the steel tubes. TIG (Tungsten Inert Gas) welding uses an electric arc and a non-consumable tungsten electrode to create a small, controlled weld pool, with a separate filler rod and shielding gas to keep the metal clean. It is slow and precise, which makes it well-suited to thin bicycle tubing once you have some practice.

Before touching the actual frame tubes, spend time running beads and joints on scrap steel of similar wall thickness. Start with flat plate, then move to simple tube-to-tube joints until you can make repeatable, smooth welds without burning through.

Ready to Start When You Can:

- Weld a lap or T-joint on thin tube without blowing holes.
- Make several similar joints in a row that look and feel consistent.
- Cut a test joint open and see that the weld has penetrated properly.

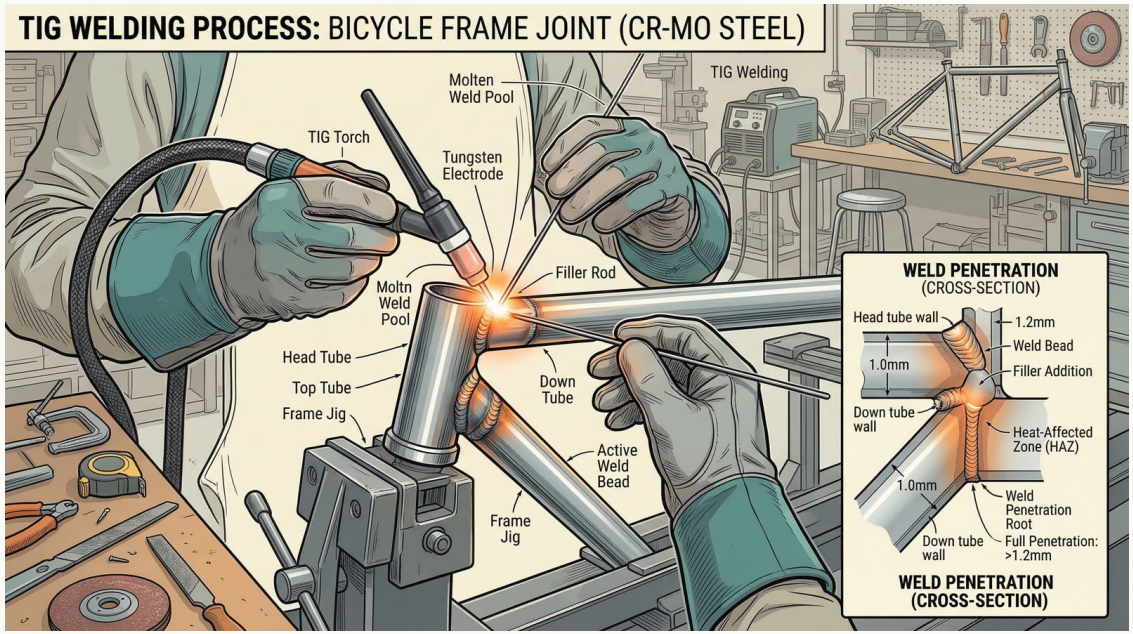

TIG welding on thin Cr-Mo steel tube: torch, filler rod, and weld pool cross-section.

Not Ready to Weld the Frame Yourself?

If you're new to TIG and don't yet have consistent, clean welds on thin tube, consider a split approach: you do all the design, tube prep, mitering, and jig work yourself, then hand the fixtured frame to an experienced welder or local framebuilder for the final joins.

You still learn 80% of the process — geometry, fit-up, tolerances, alignment — and get a safe, rideable frame without risking a bad weld on a high-stress joint. Many first-time builders do exactly this on their first frame and weld the second one themselves once they've seen how a pro handles the heat.

What You Still Do Yourself

- Design the geometry and choose the tubeset.
- Make the full-size drawing and set up the jig.
- Cut, miter, and fixture all tubes to final fit.
- Verify alignment and clearances before handing off.
- Handle all finishing: filing, prep, paint, and assembly.

What the Pro Does

- Tack and fully weld/braze all frame joints.
- Control heat input to avoid distortion and weak spots.

This Is Completely Normal

There is no shame in having a pro weld your first frame. The skills you build in design, prep, and fixturing are the hard part — and those transfer directly to your second frame when you do the welding yourself.

Think of it as an apprenticeship: you learn by watching an expert handle the heat on your own project, then apply those lessons next time.

8 Tack & Join the Front Triangle

With all tubes mitered and fitted in the jig, begin tacking. Tack the bottom bracket shell first, then the head tube, alternating sides to control distortion.

After tacking, fully weld each joint with conservative heat. Check alignment after each major weld — heat can pull the frame out of true.

- Tack BB shell first, then head tube joints
- Alternate sides to control heat distortion
- Use low amperage, keep fit-up tight
- Check alignment after each weld pass

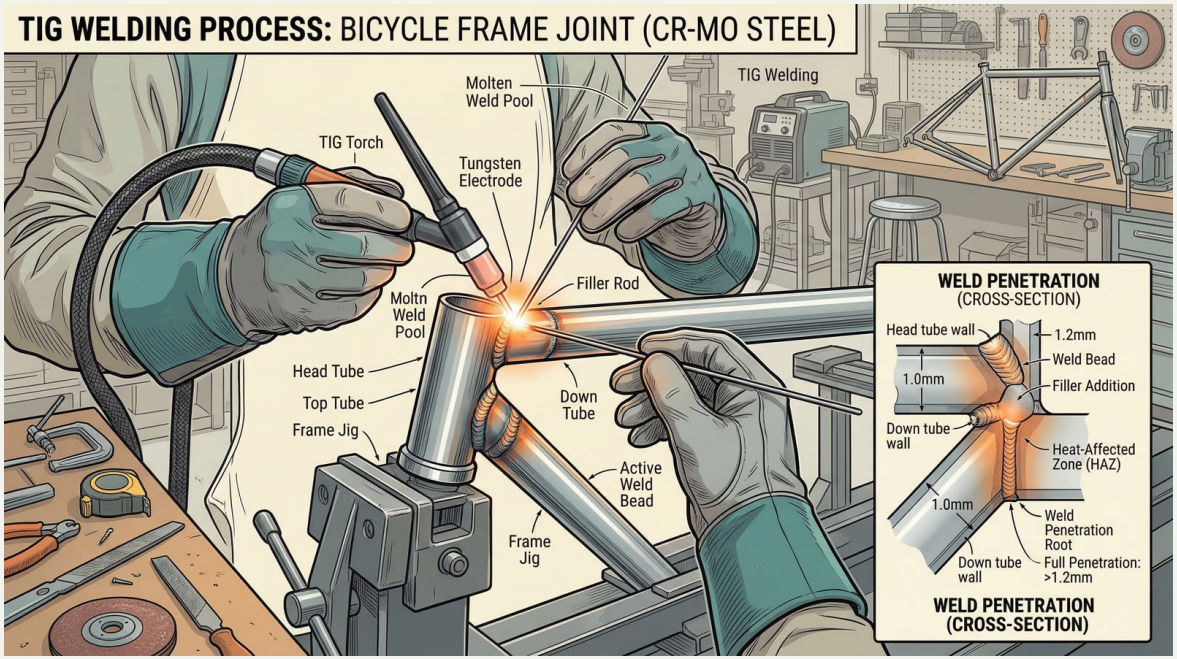

TIG tacking sequence: numbered tack points, alternating sides for heat control.

9 Stays, Dropouts & Clearances

Fit the chainstays and seatstays, ensuring adequate clearance for tires, chainring, and heel. The rear triangle must be symmetric and square to the front triangle.

Check tire clearance at the seatstays, chainstays, and bridge. Verify chainring-to-chainstay and heel-to-chainstay spacing before committing to welds.

- Miter chainstays to BB shell and dropouts
- Miter seatstays to seat tube cluster
- Verify tire, chainring, and heel clearances
- Ensure dropout spacing matches hub width

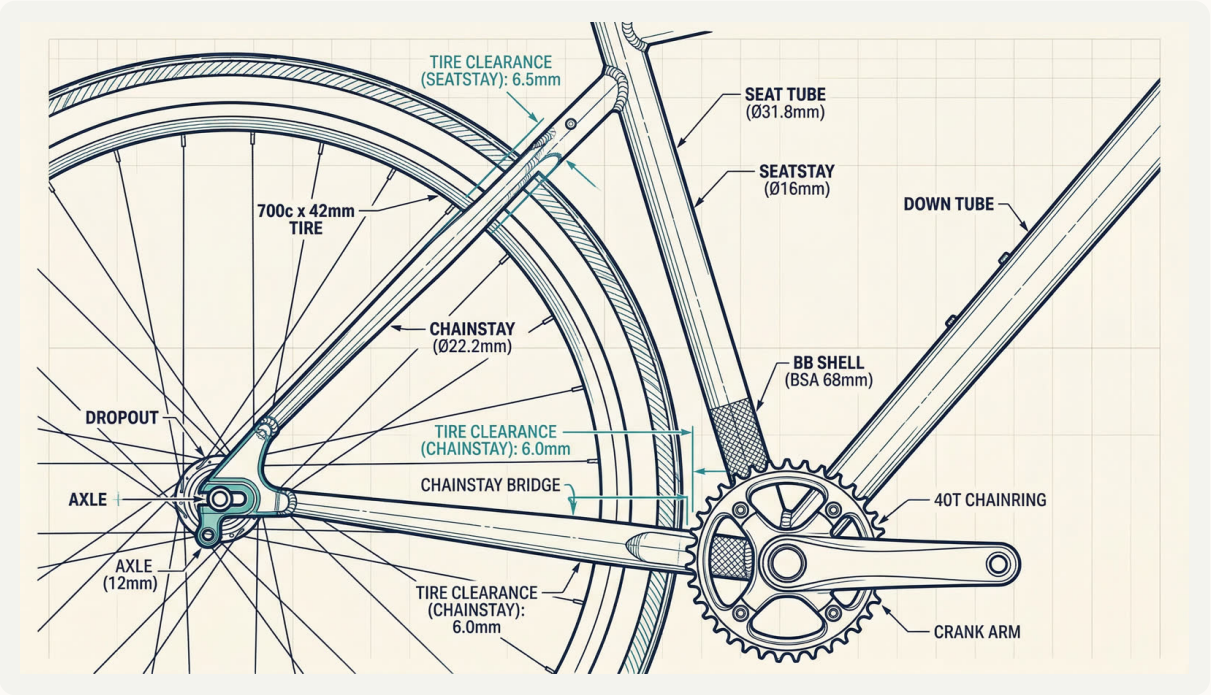

Rear triangle close-up: tire, chainring, chainstay and dropout with clearance callouts.

10 Alignment Checks

After joining both triangles, verify the entire frame is straight and square. Use strings or an alignment gauge to check rear triangle symmetry.

The head tube and seat tube should be in the same plane, parallel to the BB/axle centerline. Dropout spacing should be within tolerance for the intended hub.

- String method: BB to each dropout, measure for equal distances
- Check head tube is square to the BB/rear axle line
- Dropout spacing within 1mm of target
- Cold-set minor misalignment if needed (small corrections only; large errors mean revisiting earlier steps)

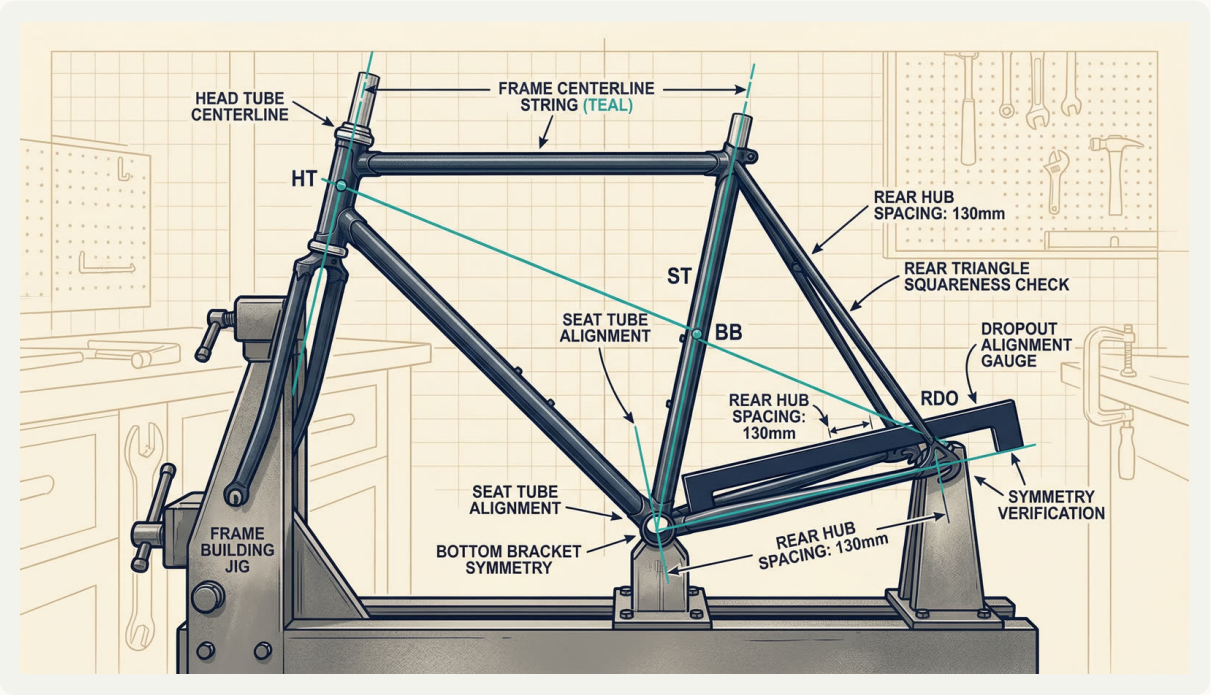

Alignment verification: string gauge from BB to dropouts, symmetry and squareness checks.

11 Details & Finishing

Add the small but important details: brake bridge, bottle bosses, fender/rack mounts if desired, and vent holes so no tube is completely sealed (to prevent pressure build-up when heating and to allow drainage).

Clean all welds — file smooth, blend fillets, and prep the surface for paint. This is where the frame goes from functional to beautiful.

- Weld or braze on bottle bosses, brake bridge, and mounts
- Drill small vent holes in sealed sections (prevents pressure build-up, allows drainage)
- File and smooth all weld beads
- Prep surface for primer and paint

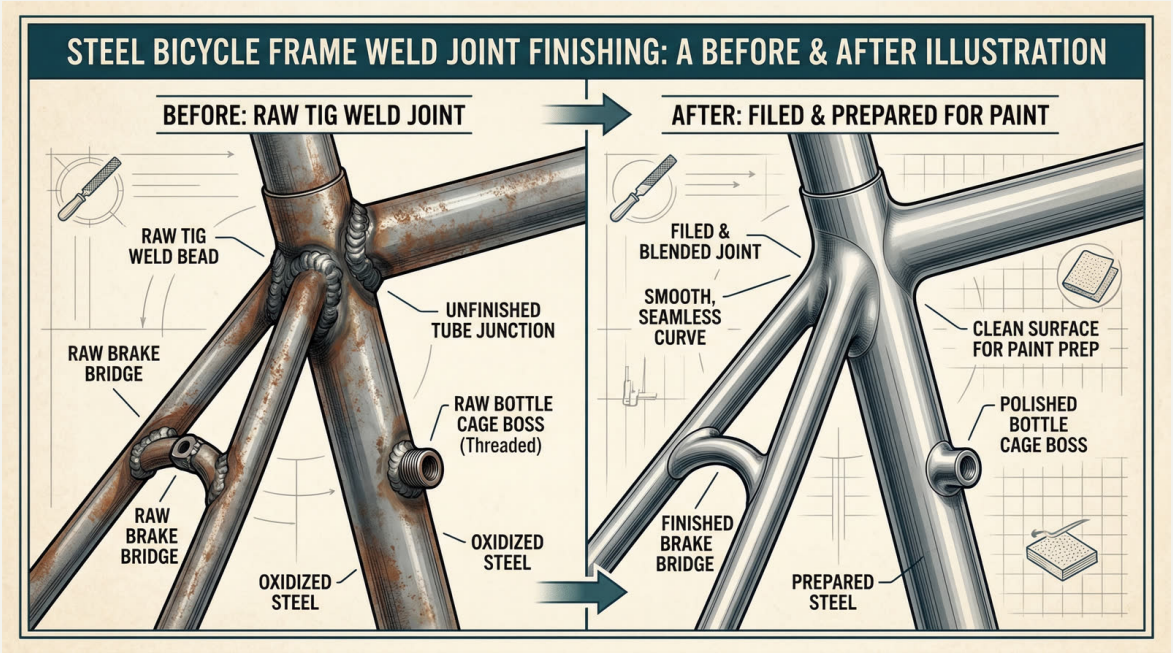

Before and after: raw TIG weld joint versus filed, smoothed, and paint-ready finish.

Post-Build Inspection

After paint, assembly, and your first few rides, check the frame carefully. Steel gives warning before it fails — small cracks appear and grow slowly — so catching them early means a simple repair, not a surprise on the road.

Check After Every Few Rides

- Run your fingers and eyes along every weld toe. Look for hairline cracks, discoloration, or any spot where the weld appears to be lifting.
- Drop both wheels in and out. They should seat easily and sit centered between the stays without forcing.
- Ride with your maximum intended tire size and sprint or corner hard. Confirm no rubbing at chainstays, seatstays, fork, or brake bridge.
- Check dropout alignment: the rear wheel should track straight behind the front with no visible offset when sighting from behind the saddle.

Inspection Schedule

- First ride: careful visual check of all joints before and after.
- After 50 km: thorough inspection of every weld toe and dropout.
- Periodically: repeat checks, especially after hard riding or impacts.

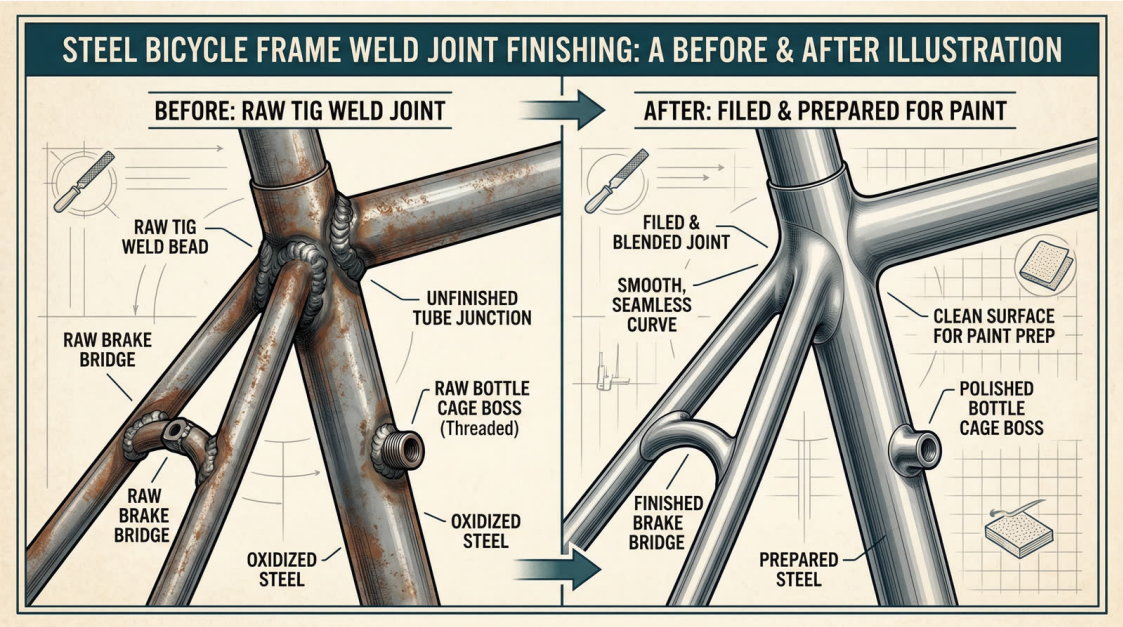

Inspect every joint carefully after paint, assembly, and first rides.

Risks & Failure Modes

A steel frame is only as good as its joints, alignment, and tube choices. The most common failure points are the high-stress junctions: head tube to down tube and top tube, bottom bracket area, and where the stays meet the dropouts. Cracks usually start where stress is concentrated by sharp transitions, thin walls, or poor alignment rather than in the middle of a straight tube.

How We Mitigate Risk

- Sensible tube diameters and wall thicknesses — slightly overbuilt for safety.
- Generous radii and fillets at all junctions to reduce stress concentration.
- Careful heat control during welding to avoid weakening tube walls.
- Tight miters with no visible gaps when held against a bright light.
- Consistent alignment checks at every stage of the build.
- Conservative geometry choices for predictable, safe handling.

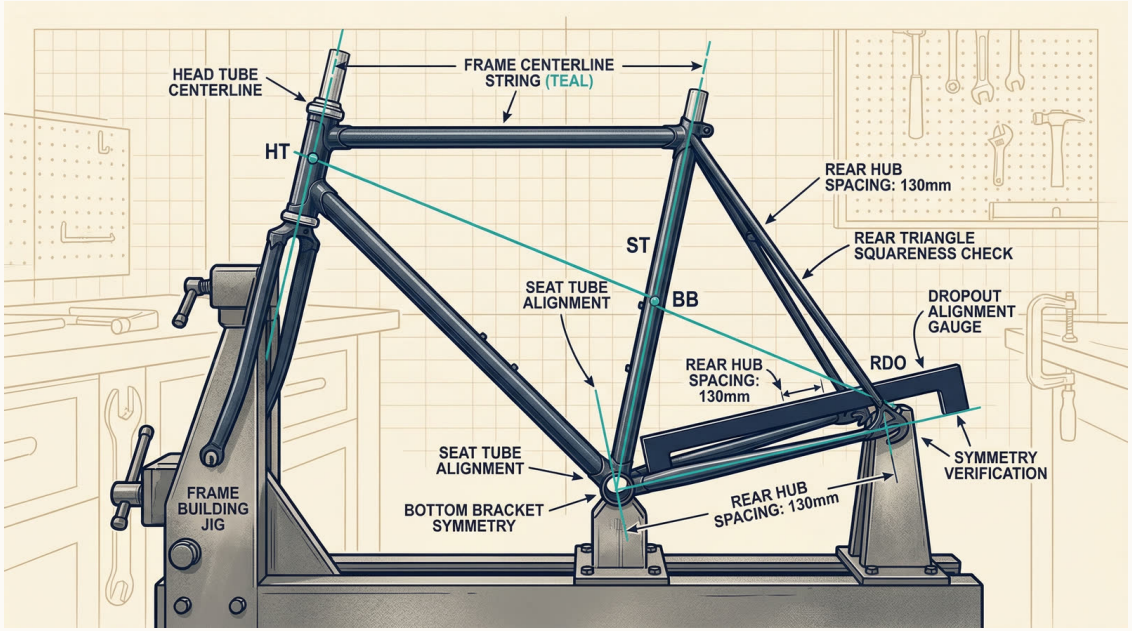

High-stress junctions are designed and inspected carefully to avoid cracks.

From Prototype to Production

Hand-built steel frame → Geometry spec sheet → 3D CAD → Factory sample & batch

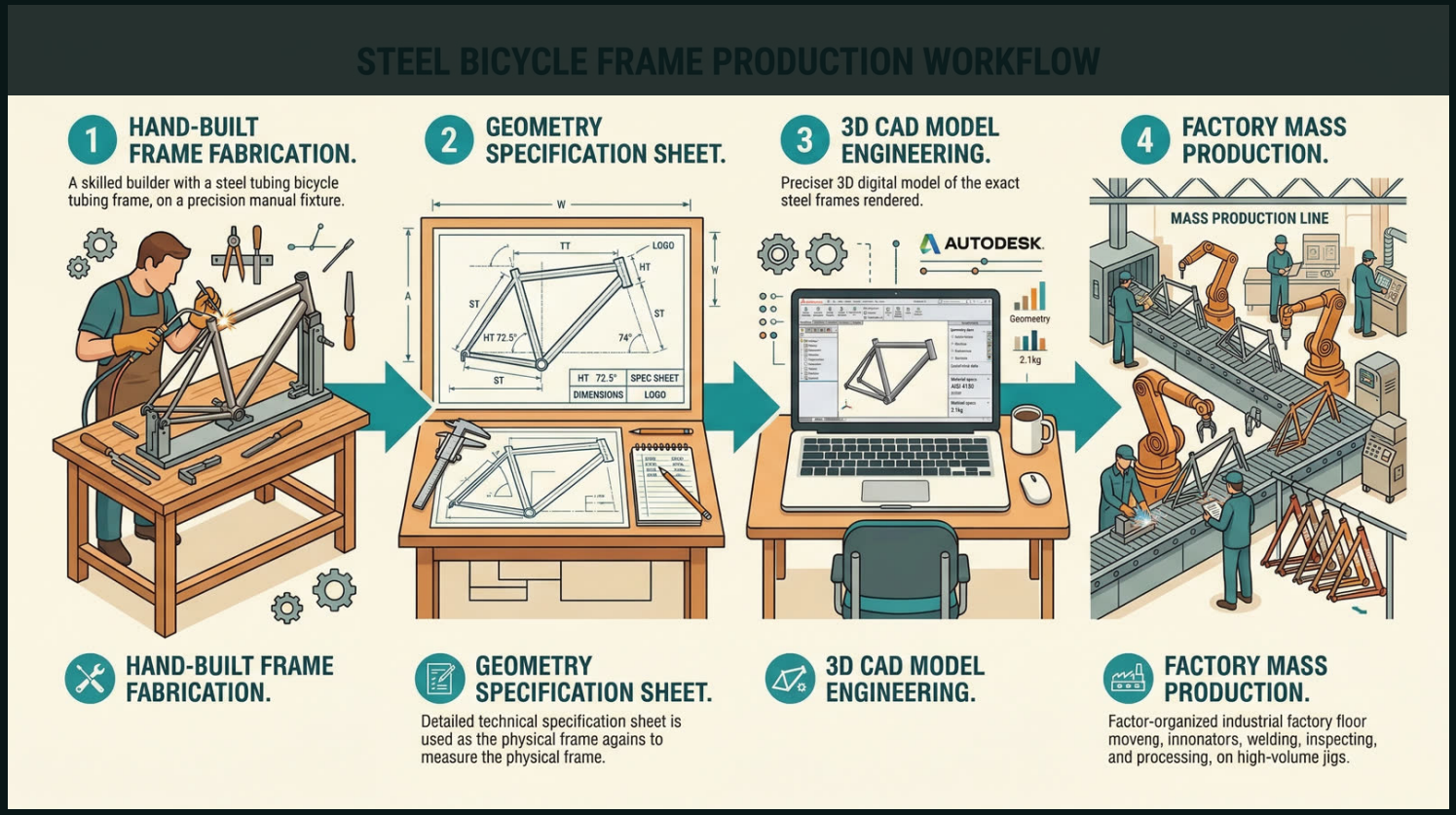

Measure your finished prototype and store: final geometry table, tube spec, and any deviations from the drawing.

If you plan to manufacture, this data is your bridge from one-off to OEM production.

Sources: hontcarbon.com • instructables.com • bicycling.com • fractory.com • esab.com • starlingcycles.com