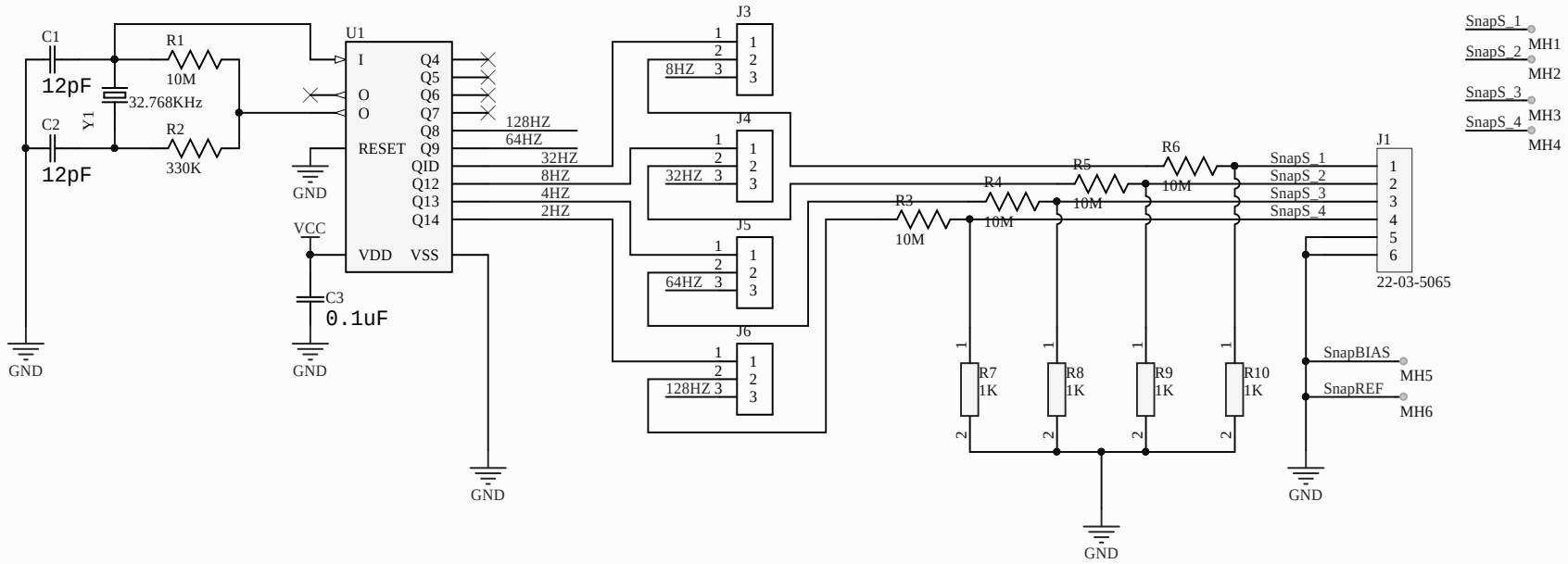

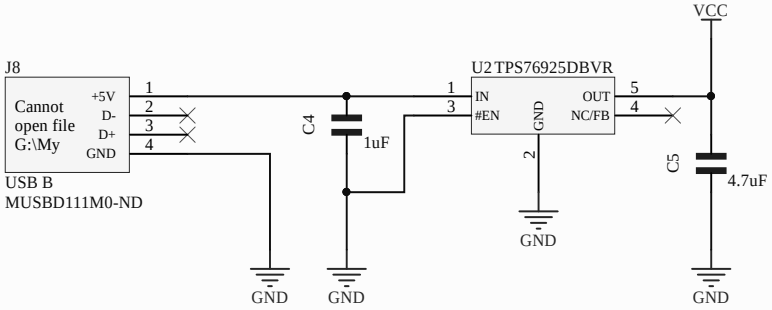

100 Mayfield Avenue
Mountain View, CA 94043
USA

Variant Name:
[No Variations]

Title:
PCBA, HEADSET TESTER BOARD, AMBER
Square Wave Generator

Confidential and Proprietary	Size: A4	Dwg No: 650-02729-01	Rev: 02
Engineer: kinseto	Date: 03/25/2019	Template: 992-00283-00 A	Sheet: 1 of 1