ITEM	NUMBER	DESCRIPTION	MANUFACTURER	MFG PART NUMBER	QTY.
1	690-14170-01	MECH, FIXTURE, CONNECTOR ALIGNMENT PLATE, AMBER	N/A	N/A	1
2	690-14180-01	MECH, FIXTURE, CONNECTOR ALIGNMENT, AMBER	N/A	N/A	1
3	250-06616-00	HW, SCREW, FHSCS, TORX, M4 x 0.7 x 10mm, LG, 90 DEG, 18-8 SS, AMBER	MCMASTER	94331A108	4
4	250-06670-00	HW, SCREW, BTN HD, M2.5 x 0.45 x 10mm LG, 18-8 SST, AMBER	MCMASTER	92095A460	2
5	710-03105-01	ASSY, CONN D-TYPE CAP 68 POS VERT, MALE, ALTERED PART, AMBER	N/A	N/A	1

REVISIONS					
ECO	REV.	ZONE	DESCRIPTION	BY	DATE
ECO-029924	01		INITIAL RELEASE	RD	4/23/2019

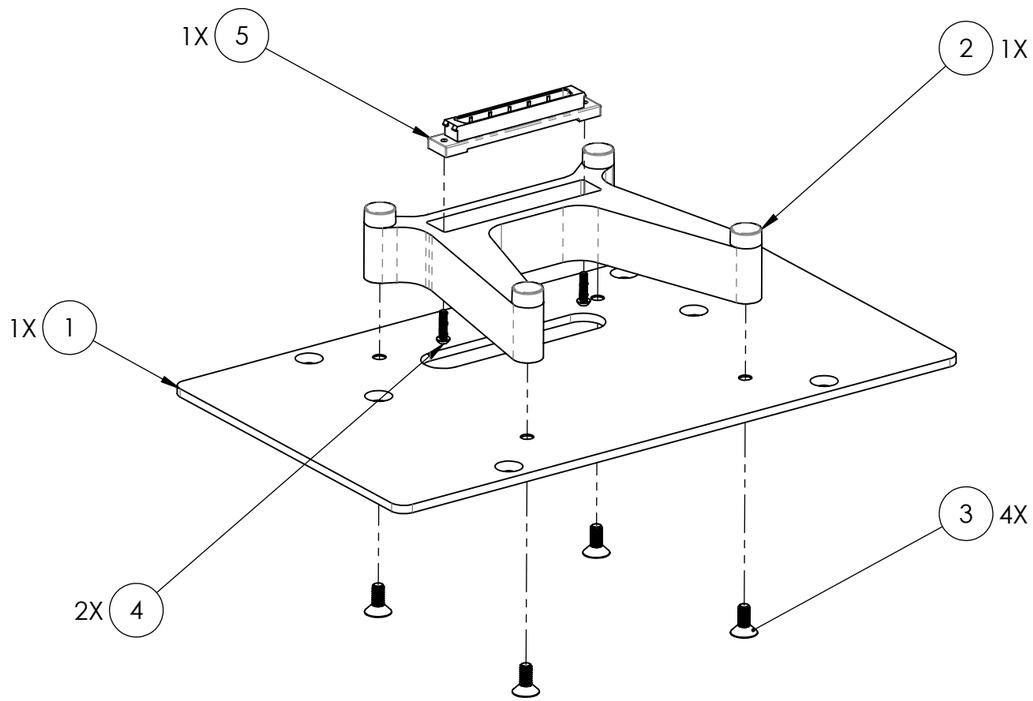

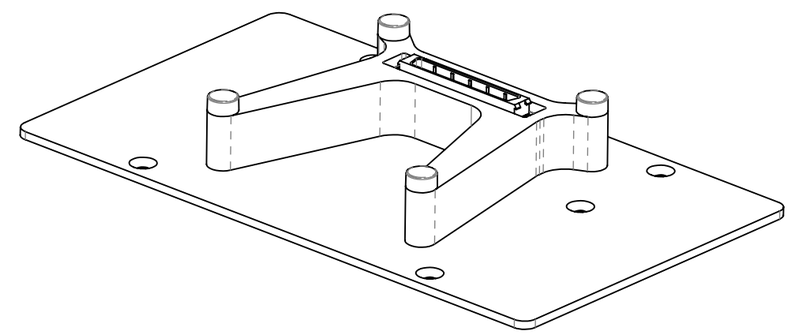

1. CLEANLINESS: PARTS ARE TO BE FREE OF ORGANIC MATERIALS, SOLVENTS OR COOLANT FLUID AND RESIDUE.
2. PART REQUIRES PACKAGING TO PREVENT DAMAGE DURING SHIPMENT.
3. PART PACKAGING REQUIRES LABELING OF PART NUMBER AND MANUFACTURER NAME

CONFIDENTIAL

THIS DOCUMENT AND THE DATA DISCLOSED HEREIN OR WHEREWITH IS NOT TO BE REPRODUCED, USED, OR DISCLOSED IN WHOLE OR IN PART TO ANYONE WITHOUT THE PERMISSION OF GOOGLE, INC.

UNLESS OTHERWISE SPECIFIED DIMENSIONS ARE IN MILLIMETERS

TOLERANCES UNLESS OTHERWISE NOTED:

X ± 1.0
X.X ± 0.3
X.XX ± .1
ANGLES ± .25°

THIRD ANGLE PROJECTION

SURFACE ROUGHNESS 1.6 UNLESS OTHERWISE SPECIFIED

BREAK SHARP EDGES TO <0.4 MM

DRAWN: R. DIAZ	DATE: 4/8/2019	
CHECKED: Z.ZWEBER	DATE: 4/8/2019	
ENGINEER: HADEN CORY	DATE: 4/8/2019	
MATERIAL: N/A		
FINISH: N/A		
INTERPRET DRAWING PER ASME Y14.5-2009		
DO NOT SCALE DRAWING		

100 Mayfield Avenue
Mountain View CA 94043
USA

TITLE: ASSY, MECH, FIXTURE, CONNECTOR ALIGNMENT TOOL, AMBER		
SIZE: B	PART NUMBER: 730-05036-01	REV: 01
SCALE: 1:2	FILE NAME: 730-05036-01	MASS (g): 429.98

SHEET 1 OF 1