REVISIONS					
ECO	REV.	ZONE	DESCRIPTION	BY	DATE
ECO-027691	01		INITIAL RELEASE	RD	11/8/2018
(02) ECO-029783	02		UPDATED DIMENSIONS AND CHANGED MATERIAL	RD	4/25/2019

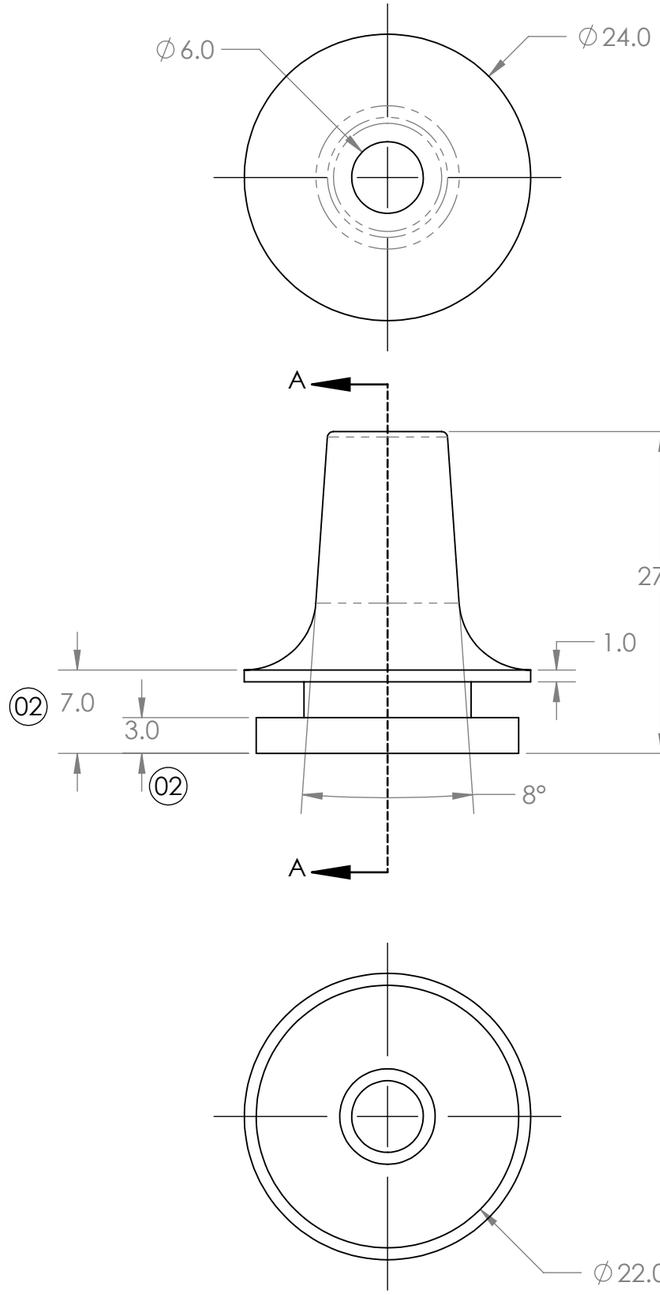

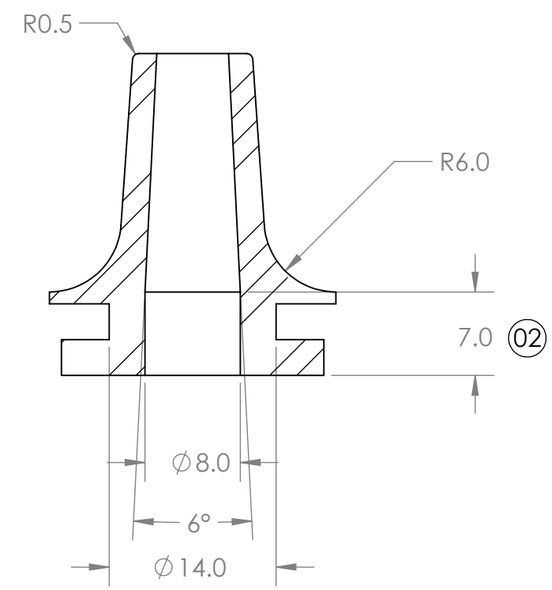

SECTION A-A

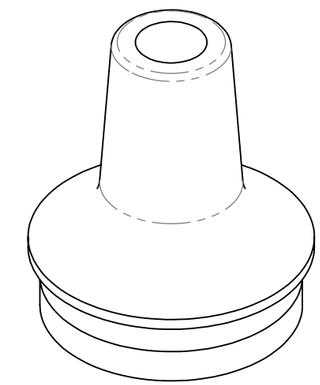

1. THIS IS A REDUCED DIMENSION DRAWING,REFER TO 3D MODEL FOR ANY MISSING DIMENSIONS.
2. FEATURE GEOMETRY IS DEFINED BY PART 3D CAD MODELS WITHIN ⌓ 0.3 A B C UNLESS OTHERWISE SPECIFIED.
3. CLEANLINESS: PARTS ARE TO BE FREE OF ORGANIC MATERIALS, SOLVENTS OR COOLANT FLUID AND RESIDUE.
4. PART REQUIRES PACKAGING TO PREVENT DAMAGE DURING SHIPMENT.
5. PART PACKAGING REQUIRES LABELING OF PART NUMBER AND MANUFACTURER NAME.

CONFIDENTIAL

THIS DOCUMENT AND THE DATA DISCLOSED HEREIN OR WHEREWITH IS NOT TO BE REPRODUCED, USED, OR DISCLOSED IN WHOLE OR IN PART TO ANYONE WITHOUT THE PERMISSION OF GOOGLE, INC.

UNLESS OTHERWISE SPECIFIED DIMENSIONS ARE IN MILLIMETERS

TOLERANCES UNLESS OTHERWISE NOTED:
X ± 1.0
X.X ± 0.3
X.XX ± 1.
ANGLES ± .25°

THIRD ANGLE PROJECTION

SURFACE ROUGHNESS 1.6 UNLESS OTHERWISE SPECIFIED

BREAK SHARP EDGES TO <0.4 MM

DRAWN R.DIAZ	DATE 11/8/2018		
CHECKED E.THWING	DATE 11/9/2018		
ENGINEER H.CORY	11/8/2018		
MATERIAL SANTOPRENE 8211-45		TITLE MECH, GROMMET, BUTTER, AMBER	
FINISH NONE		SIZE B	PART NUMBER 690-13334-01	REV 02
INTERPRET DRAWING PER ASME Y14.5-2009		SCALE 2:1	FILE NAME 690-13334-01	MASS (g): 3.287
DO NOT SCALE DRAWING				

100 Mayfield Avenue
Mountain View CA 94043
USA

Amber Part Number: 1
PN-0168-00, Rev 2

SHEET 1 OF 1