ITEM	NUMBER	DESCRIPTION	MANUFACTURER	MFG PART NUMBER	QTY.	TORQUE ±10% N-m / [in-lbf] / {in-oz}
1	690-13313-01	MECH, BUTTER ADAPTER BOTTOM	N/A	N/A	1	
2	690-13320-01	MECH, BUTTER ADAPTER TOP	N/A	N/A	1	
3	250-06431-00	HW, SCREW, THREAD FORMING, TORX RDH, M2.63 x 1.06 THD x 6 MM LG, 18-8 SST, AMBER	MCMASTER CARR	99397A349	6	N-m 0.25 [2.21in-lbf] {35in-oz} (4)
4	650-02489-01	PCBA, A.E BREAKOUT, AMBER	N/A	N/A	1	
5	690-13337-01	MECH, BOOT, CONNECTOR, BUTTER	N/A	N/A	1	
6	250-06430-00	HW, SCREW, THREAD FORMING, TORX RDH, M3.63 x 1.34 THD x 10 MM LG, 18-8 SST, AMBER	MCMASTER CARR	99397A484	4	N-m 0.96 [8.5 in-lbf] {136in-oz} (4)
7	690-13334-01	MECH, GROMMET, BUTTER, AMBER	N/A	N/A	1	
8	690-14175-01	MECH, O-RING, 149.35MM ID, 1.78 THK, AMBER	N/A	N/A	1	

REVISIONS				
ECO	REV.	DESCRIPTION	BY	DATE
ECO-029659	01	INITIAL RELEASE	RD	4/3/2019
ECO-029861	02	TITLE CHANGE ONLY	RD	5/22/2019
ECO-033611	03	ADDED TORQUE SPEC TO ITEMS 3 AND 6	RD	1/10/2020

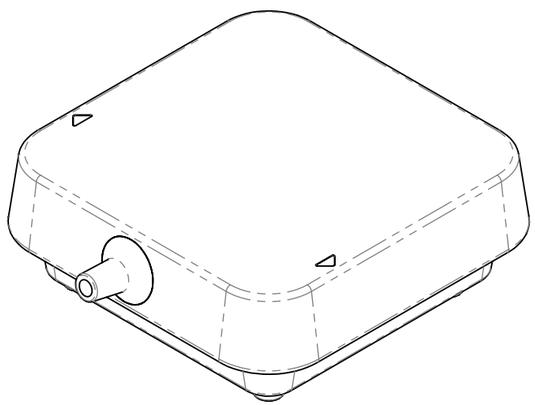

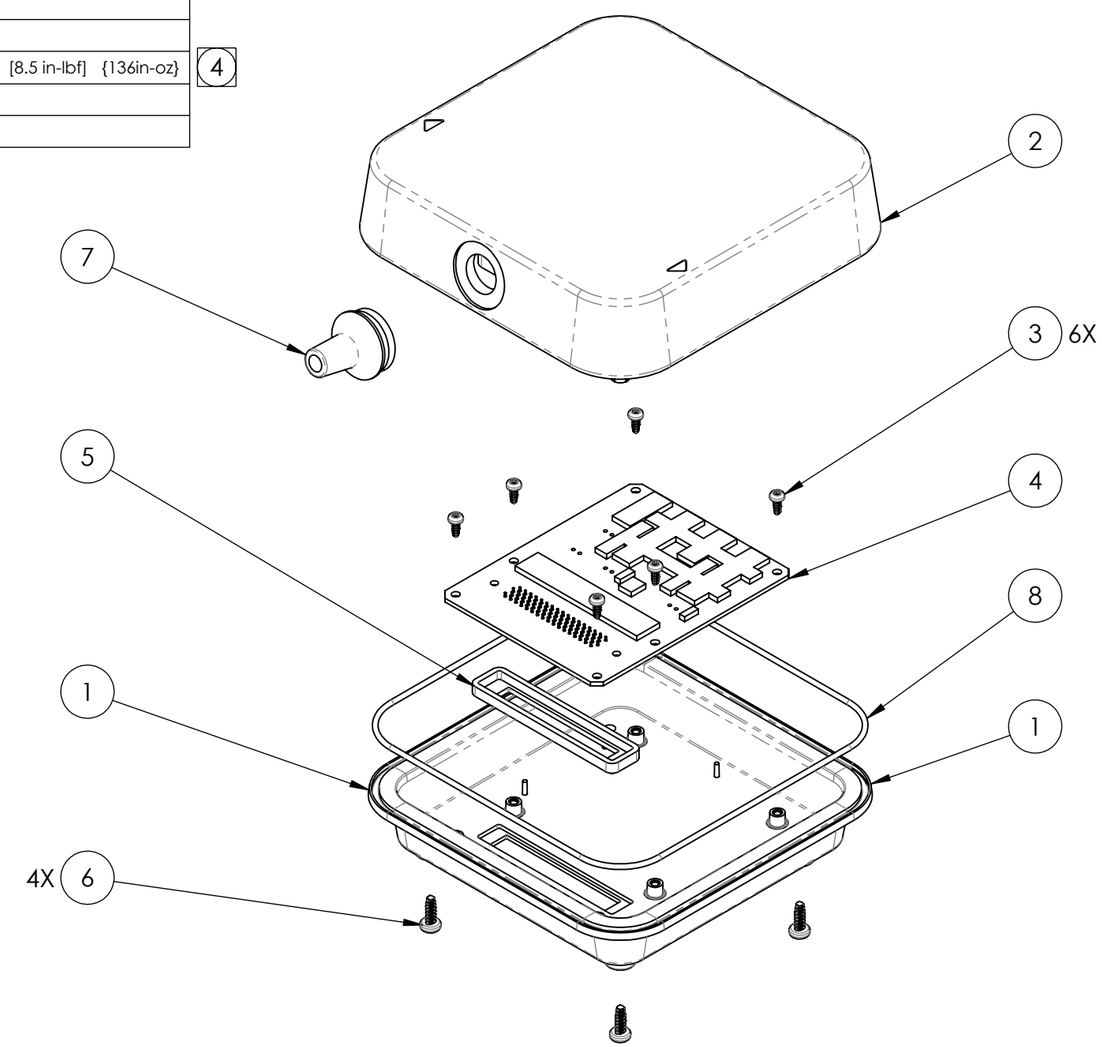

1. CLEANLINESS: PARTS TO BE FREE OF ORGANIC MATERIALS, SOLVENTS OR COOLANT FLUID AND RESIDUE.
2. PART REQUIRES PACKAGING TO PREVENT DAMAGE DURING SHIPMENT.
3. PART PACKAGING REQUIRES LABELING OF PART NUMBER AND MANUFACTURER NAME

(4) TORQUE METER: +/- 10% IS ALLOWABLE.

CONFIDENTIAL

THIS DOCUMENT AND THE DATA DISCLOSED HEREIN OR WHEREWITH IS NOT TO BE REPRODUCED, USED, OR DISCLOSED IN WHOLE OR IN PART TO ANYONE WITHOUT THE PERMISSION OF GOOGLE, INC.

UNLESS OTHERWISE SPECIFIED DIMENSIONS ARE IN MILLIMETERS

TOLERANCES UNLESS OTHERWISE NOTED:
X ± 1.0
X.X ± 0.3
X.XX ± .1
ANGLES ± .25°

THIRD ANGLE PROJECTION

SURFACE ROUGHNESS 1.6 UNLESS OTHERWISE SPECIFIED

BREAK SHARP EDGES TO <0.4 MM

DRAWN	R.DIAZ	DATE	4/3/2019
CHECKED	Z.ZWEBER	DATE	4/3/2019
ENGINEER	HADEN CORY	DATE	4/3/2019
MATERIAL	N/A		
FINISH	N/A		

INTERPRET DRAWING PER ASME Y14.5-2009

DO NOT SCALE DRAWING

100 Mayfield Avenue
Mountain View CA 94043
USA

TITLE	ASSY, ELEC-MECH, M20 ADAPTER, BUTTER STICK, AMBER		
SIZE B	PART NUMBER 710-03081-01		REV 03
SCALE 1:2	FILE NAME 710-03081-01		MASS (g): 225.72

SHEET 1 OF 1