Digital and Stepper

File: DigitalStepper.kicad_sch

SCSI

File: SCSI.kicad_sch

Analog and Interface

File: Analog.kicad_sch

Sheet: /
File: st225_20427.kicad_sch

Title:

Size: A4	Date:	**Rev:**
KiCad E.D.A. kicad 7.0.8		Id: 1/4

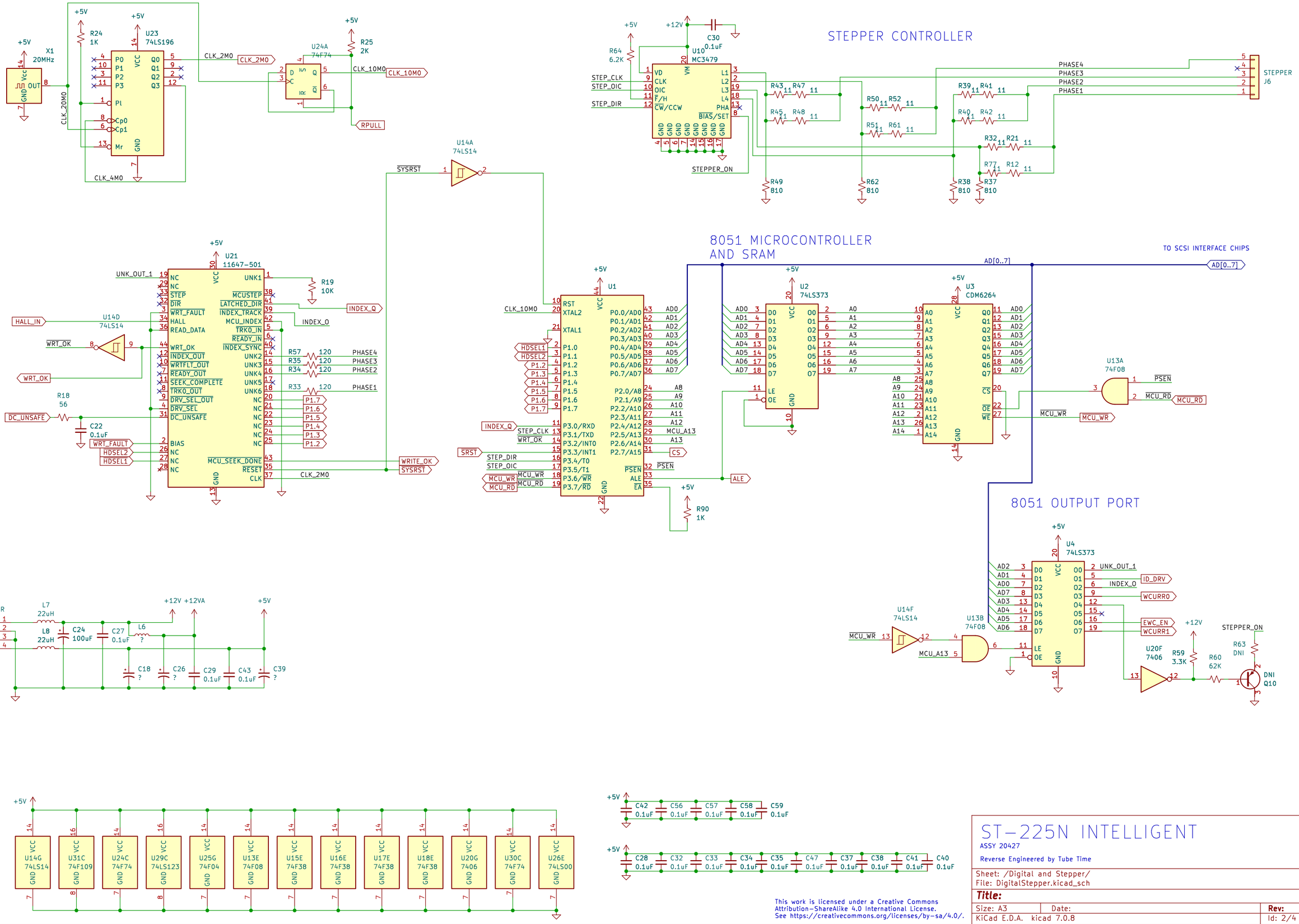
STEPPER CONTROLLER
8051 MICROCONTROLLER AND SRAM
8051 OUTPUT PORT
TO SCSI INTERFACE CHIPS
ST-225N INTELLIGENT
ASSY 20427
Reverse Engineered by Tube Time
Sheet: /Digital and Stepper/
File: DigitalStepper.kicad_sch
Title:
Size: A3
Date:
Rev:
KiCad E.D.A. kicad 7.0.8
Id: 2/4
This work is licensed under a Creative Commons Attribution-ShareAlike 4.0 International License.
See https://creativecommons.org/licenses/by-sa/4.0/.

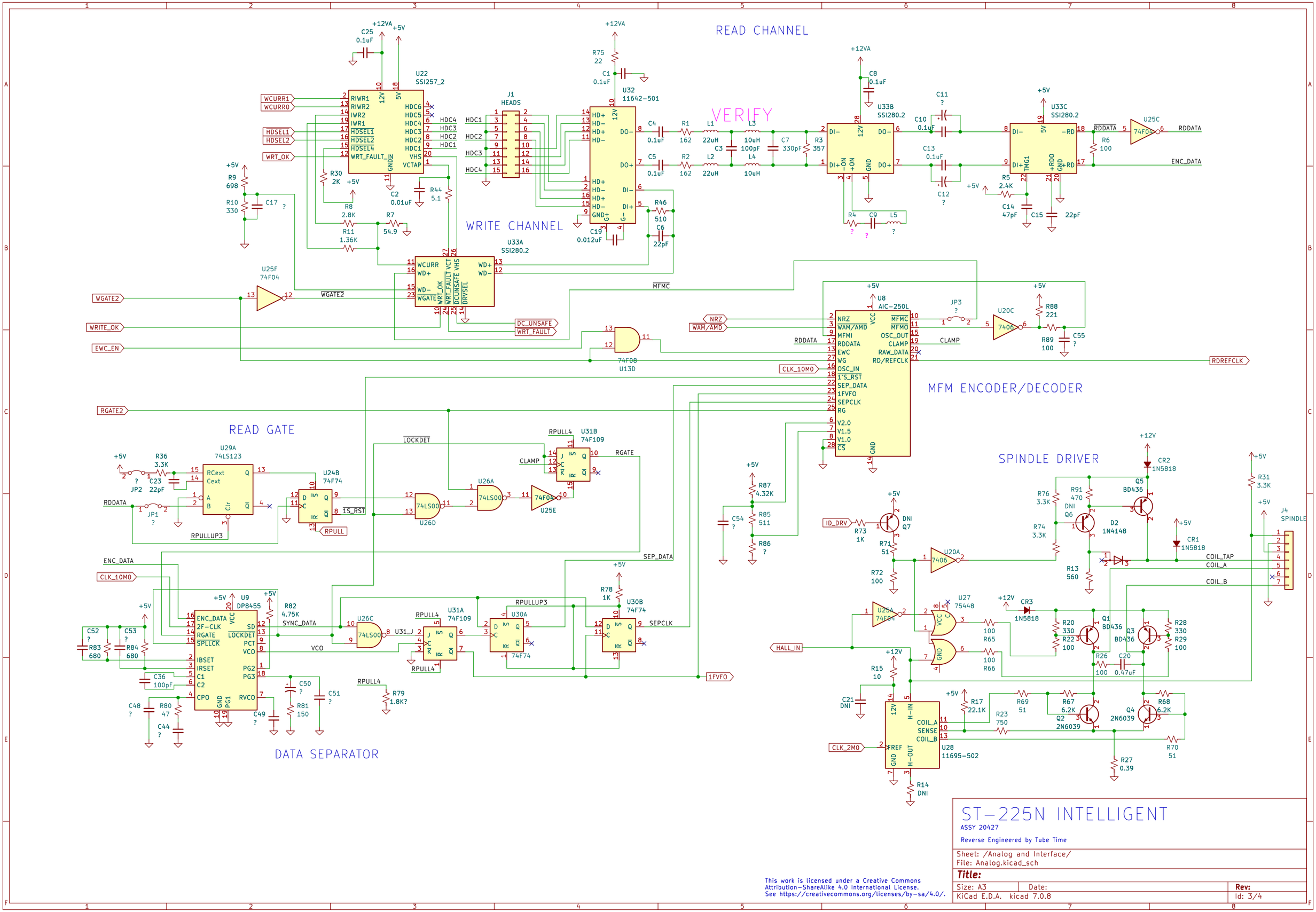
READ CHANNEL
VERIFY
WRITE CHANNEL
MFM ENCODER/DECODER
READ GATE
SPINDLE DRIVER
DATA SEPARATOR
U22 SSI257_2
U32 11642-501
U33B SSI280.2
U33C SSI280.2
U33A SSI280.2
U25C 74F04
U25F 74F04
U8 AIC-250L
U20C 7406
U13D 74F08
U29A 74LS123
U24B 74F74
U31B 74F109
U26A 74LS00
U26D 74LS00
U25E 74F04
U9 DP8455
U26C 74LS00
U31A 74F109
U30A 74F74
U30B 74F74
U20A 7406
U25A 74F04
U27 75448
U28 11695-502
J1 HEADS
J4 SPINDLE
RDDATA
ENC_DATA
RDREFCLK
CLK_10M0
CLK_2M0
HALL_IN
ID_DRV
WCURR1
WCURR0
HDSEL1
HDSEL2
WRT_OK
WGATE2
WRITE_OK
EWC_EN
RGATE2
DC_UNSAFE
WRT_FAULT
MFMC
NRZ
WAM/AMD
CLAMP
LOCKDET
RGATE
1S_RST
RPULL
RPULLUP3
SEP_DATA
SEPCLK
SYNC_DATA
VCO
1FVFO
COIL_TAP
COIL_A
COIL_B
ST-225N INTELLIGENT
ASSY 20427
Reverse Engineered by Tube Time
Sheet: /Analog and Interface/
File: Analog.kicad_sch
Title:
Size: A3
Date:
Rev:
KiCad E.D.A. kicad 7.0.8
Id: 3/4
This work is licensed under a Creative Commons Attribution-ShareAlike 4.0 International License. See https://creativecommons.org/licenses/by-sa/4.0/.

DUAL PORT BUFFER CONTROLLER

SCSI OUTPUT BUFFERS

TERMINATION

SCSI INPUT BUFFERS

PROGRAMMABLE SCSI CONTROLLER

SCSI BUFFER SRAM

SCSI ID JUMPER

J8 SCSI

RN1 TERM

RN2 TERM

RN3 TERM

J9 SCSI ID

U19 74LS373

U12 74LS240

U11 74LS240

U6 AIC-300L

U5 AIC-010L

U7 SRAM_6116

U17A 74F38

U17B 74F38

U17C 74F38

U17D 74F38

U18A 74F38

U18B 74F38

U18C 74F38

U18D 74F38

U16A 74F38

U15A 74F38

U15B 74F38

U15C 74F38

U15D 74F38

U16C 74F38

U16D 74F38

U26B 74LS00

U25B 74F04

U25D 74F04

U13C 74F08

U14A 74LS14

U14B 74LS14

U14C 74LS14

U14E 74LS14

U20B 7406

U20E 7406

U20D 7406

U29B 74LS123

U16B 74F38

R53 100

R54 51

R55 DNI

R56 DNI

R58 2K

D1 RED

+5V

SA[0..9]

AD[0..7]

SDB[0..7]

This work is licensed under a Creative Commons Attribution-ShareAlike 4.0 International License.
See https://creativecommons.org/licenses/by-sa/4.0/.

ST-225N INTELLIGENT

ASSY 20427

Reverse Engineered by Tube Time

Sheet: /SCSI/		
File: SCSI.kicad_sch		
Title:		
Size: A3	Date:	**Rev:**
KiCad E.D.A. kicad 7.0.8		Id: 4/4