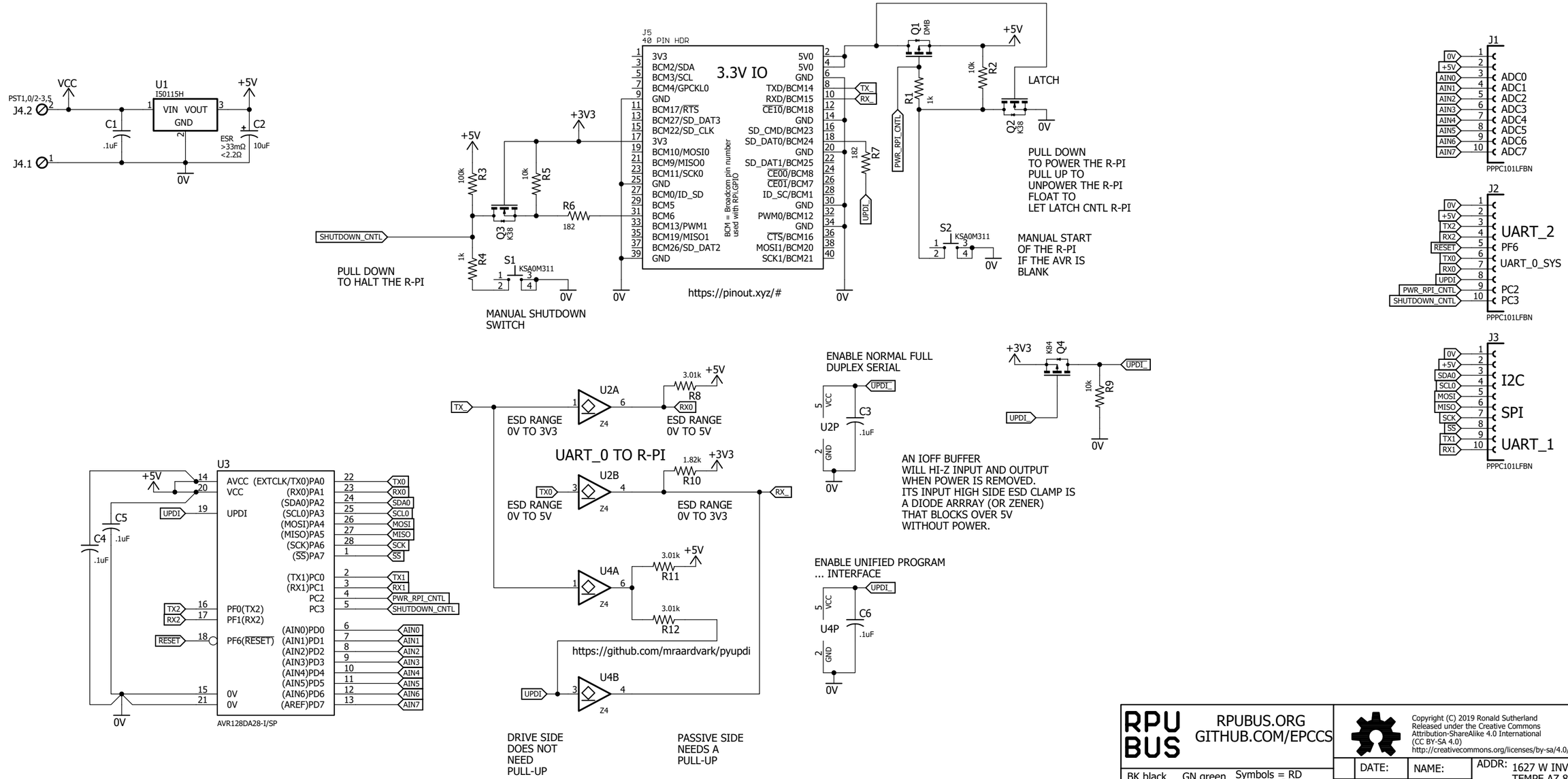

Reference Designators:
B Battery
C Capacitor
D Diode
F Fuse/Breaker
H Hardware & Outline
J Connector/Link
K Relay
L Inductor
M Motor (and Related)
P Power supply
Q Transistor
R Resistor
S Switch
T Transformer
TP Test point
U Integrated circuit/module
Y Crystal or oscillator

BK black	GN green	Symbols = RD
BN brown	BU blue	Names = BU
RD red	VT violet	Values = GY
OG orange	GY gray	Label/Info = VT
YE yellow	WH white	Busses = Dark BU
		Net/Wire = GN
		Guide = YE

RPU BUS
RPUBUS.ORG
GITHUB.COM/EPCCS

Copyright (C) 2019 Ronald Sutherland
Released under the Creative Commons
Attribution-ShareAlike 4.0 International
(CC BY-SA 4.0)
http://creativecommons.org/licenses/by-sa/4.0/

SIZE B

	DATE:	NAME:
Edit	7/19/20	RON S
Chk		

ADDR: 1627 W INVERNESS DR
TEMPE AZ 85282
E-MAIL: ronald.sutherland@gmail.com
PHONE: (480) 967-2851

REV	BUGZILLA ISSUE #	JDATE
^1	SWAP M4809 FOR 128DA28 UART0 CROSSOVER	7/19/20
^0	INIT	9/18/19

TO:
FROM:

DESCRIPTION:
AVR UPDI OR UART
FROM R-PI

MODEL:
PIUPDI

DRAWING:
19260

1/1

7/20/2020 2:36 PM