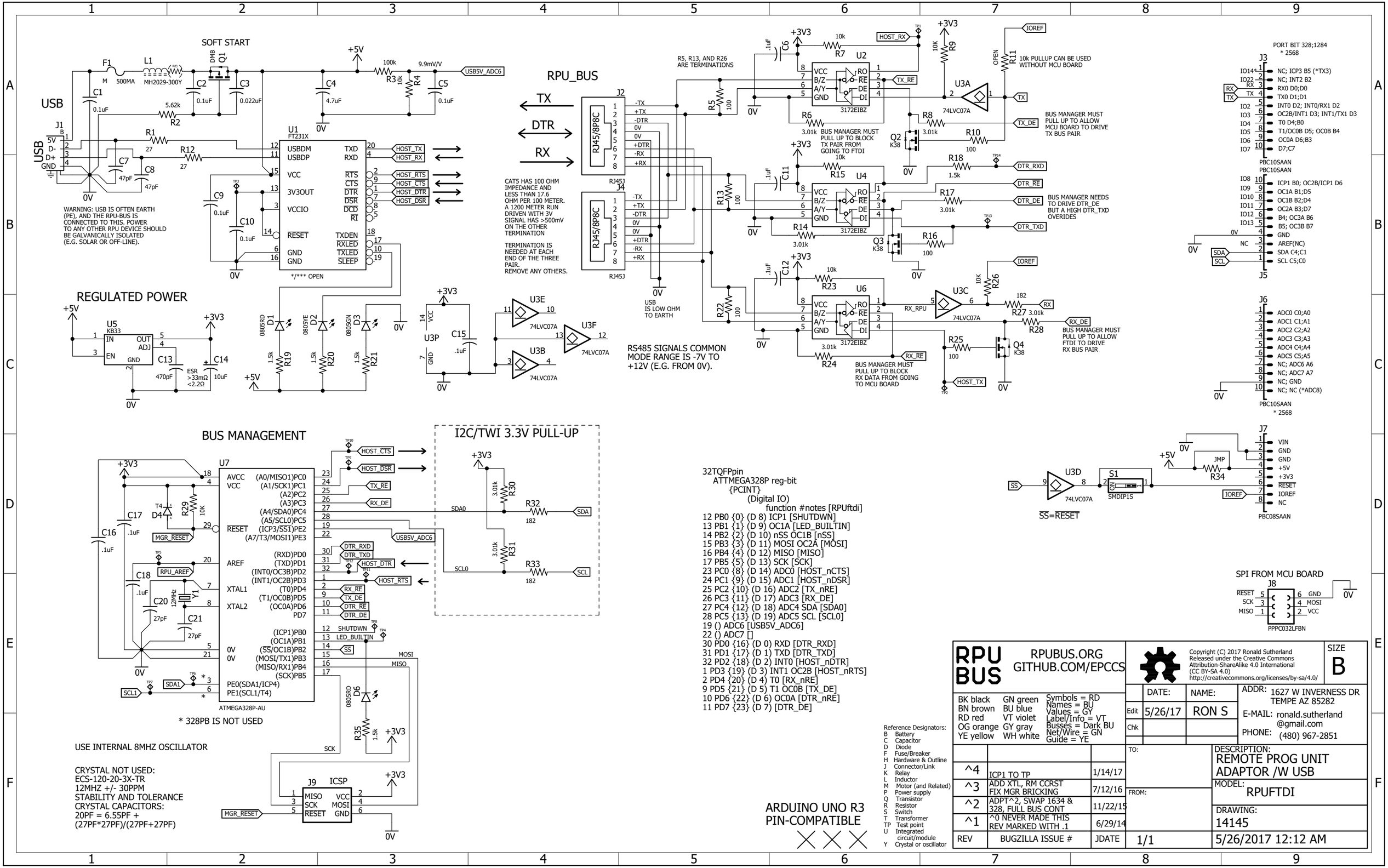
SOFT START
USB
J1
USB
5V
D-
D+
GND
F1
M
500MA
L1
MH2029-300Y
Q1
DMB
C1
0.1uF
C2
0.1uF
C3
0.022uF
C4
4.7uF
+5V
100k
R3
10k
R4
9.9mV/V
C5
0.1uF
USB5V_ADC6
5.62k
R2
R1
27
R12
27
C7
47pF
C8
47pF
0V
WARNING: USB IS OFTEN EARTH (PE), AND THE RPU-BUS IS CONNECTED TO THIS. POWER TO ANY OTHER RPU DEVICE SHOULD BE GALVANICALLY ISOLATED (E.G. SOLAR OR OFF-LINE).
U1
FT231X
USBDM
USBDP
VCC
3V3OUT
VCCIO
RESET
GND
GND
TXD
RXD
RTS
CTS
DTR
DSR
DCD
RI
TXDEN
RXLED
TXLED
SLEEP
HOST_TX
HOST_RX
HOST_RTS
HOST_CTS
HOST_DTR
HOST_DSR
C9
0.1uF
C10
0.1uF
*/*** OPEN
REGULATED POWER
+5V
U5
KB33
IN
OUT
ADJ
EN
GND
+3V3
C13
470pF
ESR
>33mΩ
<2.2Ω
C14
10uF
0V
0805RD
D1
0805YE
D2
0805GN
D3
1.5k
R19
1.5k
R20
1.5k
R21
+5V
+3V3
U3P
VCC
GND
C15
.1uF
U3E
74LVC07A
U3F
74LVC07A
U3B
74LVC07A
RPU_BUS
TX
DTR
RX
J2
RJ45/8P8C
RJ45J
J4
RJ45/8P8C
RJ45J
-TX
+TX
-DTR
0V
0V
+DTR
-RX
+RX
CAT5 HAS 100 OHM IMPEDANCE AND LESS THAN 17.6 OHM PER 100 METER. A 1200 METER RUN DRIVEN WITH 3V SIGNAL HAS >500mV ON THE OTHER TERMINATION
TERMINATION IS NEEDED AT EACH END OF THE THREE PAIR. REMOVE ANY OTHERS.
USB IS LOW OHM TO EARTH
R5, R13, AND R26 ARE TERMINATIONS
R5
100
R13
100
R22
100
RS485 SIGNALS COMMON MODE RANGE IS -7V TO +12V (E.G. FROM 0V).
C6
.1uF
+3V3
10k
R7
HOST_RX
U2
VCC
B/Z
A/Y
GND
RO
RE
DE
DI
3172EIBZ
TX_RE
R6
3.01k
BUS MANAGER MUST PULL UP TO BLOCK TX PAIR FROM GOING TO FTDI
10k
R9
IOREF
OPEN
R11
10k PULLUP CAN BE USED WITHOUT MCU BOARD
U3A
74LVC07A
TX
R8
3.01k
R10
100
Q2
K38
TX_DE
BUS MANAGER MUST PULL UP TO ALLOW MCU BOARD TO DRIVE TX BUS PAIR
C11
.1uF
R15
U4
R18
1.5k
DTR_RXD
DTR_RE
R17
3.01k
DTR_DE
BUS MANAGER NEEDS TO DRIVE DTR_DE BUT A HIGH DTR_TXD OVERIDES
R14
3.01k
Q3
K38
R16
100
DTR_TXD
C12
.1uF
R23
U6
RX_RPU
U3C
74LVC07A
10K
R26
182
RX
R27
3.01k
R28
RX_DE
BUS MANAGER MUST PULL UP TO ALLOW FTDI TO DRIVE RX BUS PAIR
R25
100
Q4
K38
R24
3.01k
RX_RE
BUS MANAGER MUST PULL UP TO BLOCK RX DATA FROM GOING TO MCU BOARD
HOST_TX
PORT BIT 328;1284
* 2568
J3
IO14 NC; ICP3 B5 (*TX3)
IO22 NC; INT2 B2
RX IO3 RX0 D0;D0
TX IO4 TX0 D1;D1
IO2 INT0 D2; INT0/RX1 D2
IO3 OC2B/INT1 D3; INT1/TX1 D3
IO4 T0 D4;B0
IO5 T1/OC0B D5; OC0B B4
IO6 OC0A D6;B3
IO7 D7;C7
PBC10SAAN
PBC10SAAN
IO8 ICP1 B0; OC2B/ICP1 D6
IO9 OC1A B1;D5
IO10 OC1B B2;D4
IO11 OC2A B3;D7
IO12 B4; OC3A B6
IO13 B5; OC3B B7
0V GND
NC AREF(NC)
SDA SDA C4;C1
SCL SCL C5;C0
J5
J6
ADC0 C0;A0
ADC1 C1;A1
ADC2 C2;A2
ADC3 C3;A3
ADC4 C4;A4
ADC5 C5;A5
NC; ADC6 A6
NC; ADC7 A7
NC; GND
NC; NC (*ADC8)
PBC10SAAN
* 2568
BUS MANAGEMENT
U7
+3V3
AVCC
VCC
(A0/MISO1)PC0
(A1/SCK1)PC1
(A2)PC2
(A3)PC3
(A4/SDA0)PC4
(A5/SCL0)PC5
RESET (ICP3/SS1)PE2
(A7/T3/MOSI1)PE3
(RXD)PD0
(TXD)PD1
(INT0/OC3B)PD2
(INT1/OC2B)PD3
(T0)PD4
(T1/OC0B)PD5
(OC0A)PD6
PD7
(ICP1)PB0
(OC1A)PB1
0V (SS/OC1B)PB2
0V (MOSI/TX1)PB3
(MISO/RX1)PB4
(SCK)PB5
PE0(SDA1/ICP4)
PE1(SCL1/T4)
AREF
XTAL1
XTAL2
ATMEGA328P-AU
T4
D4
R29
10K
C17
.1uF
C16
.1uF
MGR_RESET
RPU_AREF
C18
.1uF
C20
27pF
12MHz
Y1
C21
27pF
0V
SDA1
SCL1
HOST_CTS
HOST_DSR
TX_RE
RX_DE
USB5V_ADC6
DTR_RXD
DTR_TXD
HOST_DTR
HOST_RTS
RX_RE
TX_DE
DTR_RE
DTR_DE
SHUTDWN
LED_BUILTIN
SS
MOSI
MISO
SCK
* 328PB IS NOT USED
USE INTERNAL 8MHZ OSCILLATOR
CRYSTAL NOT USED:
ECS-120-20-3X-TR
12MHZ +/- 30PPM
STABILITY AND TOLERANCE
CRYSTAL CAPACITORS:
20PF = 6.55PF +
(27PF*27PF)/(27PF+27PF)
I2C/TWI 3.3V PULL-UP
+3V3
3.01k
R30
SDA0
R32
182
SDA
3.01k
R31
SCL0
R33
182
SCL
0805RD
D6
R35
1.5k
+3V3
J9
ICSP
MISO
SCK
RESET
VCC
MOSI
GND
MGR_RESET
0V
32TQFPin
ATTMEGA328P reg-bit
{PCINT}
(Digital IO)
function #notes [RPUftdi]
12 PB0 {0} (D 8) ICP1 [SHUTDWN]
13 PB1 {1} (D 9) OC1A [LED_BUILTIN]
14 PB2 {2} (D 10) nSS OC1B [nSS]
15 PB3 {3} (D 11) MOSI OC2A [MOSI]
16 PB4 {4} (D 12) MISO [MISO]
17 PB5 {5} (D 13) SCK [SCK]
23 PC0 {8} (D 14) ADC0 [HOST_nCTS]
24 PC1 {9} (D 15) ADC1 [HOST_nDSR]
25 PC2 {10} (D 16) ADC2 [TX_nRE]
26 PC3 {11} (D 17) ADC3 [RX_DE]
27 PC4 {12} (D 18) ADC4 SDA [SDA0]
28 PC5 {13} (D 19) ADC5 SCL [SCL0]
19 () ADC6 [USB5V_ADC6]
22 () ADC7 []
30 PD0 {16} (D 0) RXD [DTR_RXD]
31 PD1 {17} (D 1) TXD [DTR_TXD]
32 PD2 {18} (D 2) INT0 [HOST_nDTR]
1 PD3 {19} (D 3) INT1 OC2B [HOST_nRTS]
2 PD4 {20} (D 4) T0 [RX_nRE]
9 PD5 {21} (D 5) T1 OC0B [TX_DE]
10 PD6 {22} (D 6) OC0A [DTR_nRE]
11 PD7 {23} (D 7) [DTR_DE]
ARDUINO UNO R3
PIN-COMPATIBLE
Reference Designators:
B Battery
C Capacitor
D Diode
F Fuse/Breaker
H Hardware & Outline
J Connector/Link
K Relay
L Inductor
M Motor (and Related)
P Power supply
Q Transistor
R Resistor
S Switch
T Transformer
TP Test point
U Integrated circuit/module
Y Crystal or oscillator
U3D
74LVC07A
SS
SS=RESET
S1
SMDIP1S
+5V
0V
JMP
R34
IOREF
J7
VIN
GND
GND
+5V
+3V3
RESET
IOREF
NC
PBC08SAAN
SPI FROM MCU BOARD
J8
RESET
SCK
MISO
GND
MOSI
VCC
PPPC032LFBN
0V
RPU BUS
RPUBUS.ORG
GITHUB.COM/EPCCS
Copyright (C) 2017 Ronald Sutherland
Released under the Creative Commons Attribution-ShareAlike 4.0 International (CC BY-SA 4.0)
http://creativecommons.org/licenses/by-sa/4.0/
SIZE
B
BK black GN green Symbols = RD
BN brown BU blue Names = BU
RD red VT violet Values = GY
OG orange GY gray Label/Info = VT
YE yellow WH white Busses = Dark BU
Net/Wire = GN
Guide = YE
DATE: NAME:
Edit 5/26/17 RON S
Chk
ADDR: 1627 W INVERNESS DR
TEMPE AZ 85282
E-MAIL: ronald.sutherland@gmail.com
PHONE: (480) 967-2851
TO:
FROM:
DESCRIPTION:
REMOTE PROG UNIT
ADAPTOR /W USB
MODEL:
RPUFTDI
DRAWING:
14145
^4 ICP1 TO TP 1/14/17
^3 ADD XTL, RM CCRST FIX MGR BRICKING 7/12/16
^2 ADPT^2, SWAP 1634 & 328, FULL BUS CONT 11/22/15
^1 ^0 NEVER MADE THIS REV MARKED WITH .1 6/29/14
REV BUGZILLA ISSUE # JDATE
1/1
5/26/2017 12:12 AM