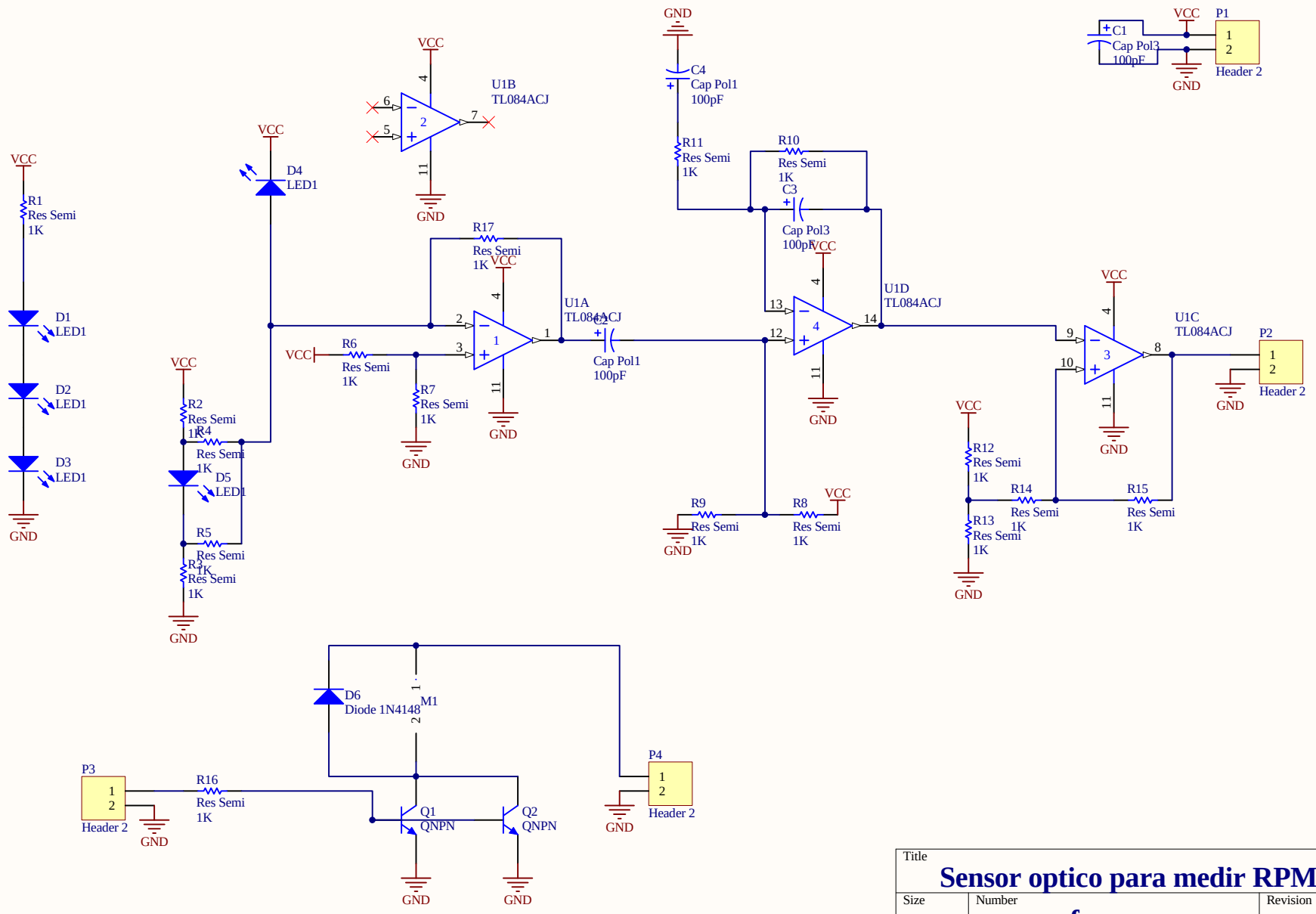

Title	**Sensor optico para medir RPM**	
Size A4	Number **epf**	Revision
Date: 15/12/2011		Sheet of
File: D:\Designs\..\SensorRPM.SchDoc		Drawn By: